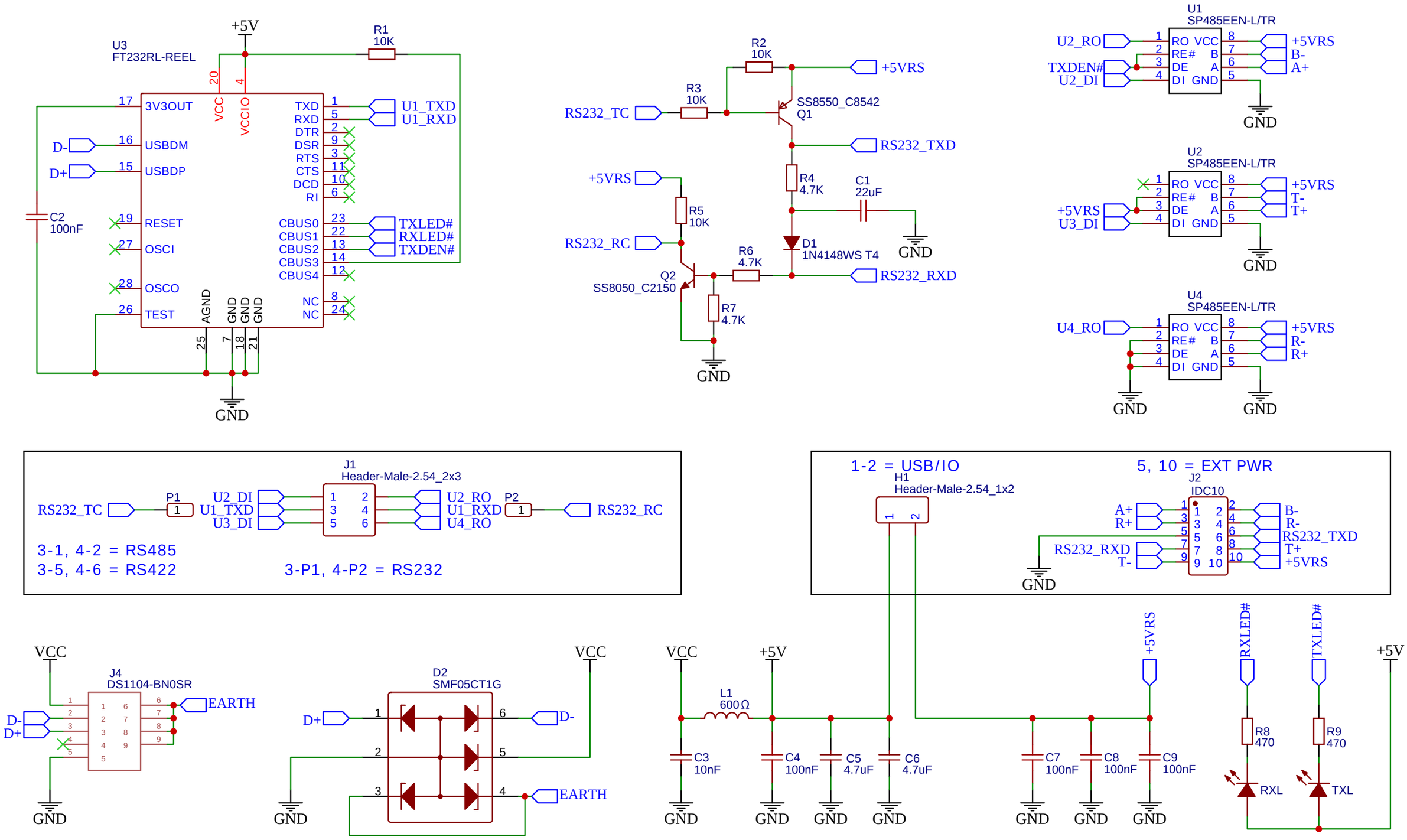

TITLE: USB para multi-serial	REV: 1.0
EasyEDA — Company: MARCOADEOLI@outlook.com	Sheet: 1/1
Date: 2021-02-12	Drawn By: MARCODEOLI