DALI Bus Power Supply

DLP-04 series

User's Manual
Click Me

(DLP-04R)

(DLP-04L)

Features

- Compact size with 2SU(35mm) width(type R)
- Universal AC input / Full range
- Withstand 300VAC Surge input for 5 seconds
- Isolation class II
- No load power consumption<0.5W(type L)
- Protections: Short circuit / Over voltage
- Cooling by free air convection
- 3 color LED for status indicator(type R)
- Installed on DIN rail TS-35/7.5 or 15(type R)
- 100% full load burn-in test
- 3 years warranty

Applications

- DALI Bus
- DALI Bus Powered Units

GTIN CODE

MW Search: https://www.meanwell.com/serviceGTIN.aspx

Description

The DALI Power Supply DLP-04 is a power supply with high efficiency and a small size, supplying 240mA for DALI control gears and DALI devices which without power supply circuits.The -20~+60℃ wide temperature operating range can meet all kinds of applications.

It is perfectly suitable for power up any products labeled with the DALI trademark. with over 35 years of industrial power supply experience,DLP-04 is engineered to be a reliable and safe solution for DALI bus environment.

Order Name Encoding

DLP - 04 R

- R → Shape: R:Rail type / L:Linear type
- 04 → Rated wattage
- DLP → Series name

SPECIFICATION

MODEL		DLP-04R	DLP-04L
OUTPUT	RATED DC VOLTAGE	16V	
	DC VOLTAGE RANGE	15.3~18.7V	
	RATED CURRENT	240mA	
	GUARANTEED SUPPLY CURRENT	240mA	
	MAXIMUM SUPPLY CURRENT	250mA	
	RATED POWER	3.84W	
	RIPPLE & NOISE (max.)Note.2	50mVp-p	
	SETUP, RISE TIME	250ms, 50ms/115VAC,230VAC	
	HOLD UP TIME (Typ.)	70ms/230VAC 16ms/115VAC at full load	
INPUT	VOLTAGE RANGE	90 ~ 264VAC 120 ~ 370VDC	
	FREQUENCY RANGE	47 ~ 63Hz	
	AC CURRENT (Typ.)	0.1A/115VAC 0.06A/230VAC; Model label: 0.4A/100-240VAC	
	INRUSH CURRENT (Typ.)	COLD START 20A/230VAC	
	LEAKAGE CURRENT	0.5mA / 240VAC	
	NO LOAD POWER CONSUMPTION	Typ. 0.5W	<0.5W
PROTECTION	SHORT CIRCUIT	Protection type : Constant current limiting, recovers automatically after fault condition is removed	
	OVER VOLTAGE	23.6 ~ 27V	
		Protection type : Shut off o/p voltage, clamping by zener diode	
FUNCTION	LED DISPLAY	Green LED: Normal operation	None
		Yellow LED: Bus Communication	None
		Red LED: Bus short detection	None
ENVIRONMENT	WORKING TEMP.	-20 ~ +60℃ (Refer to "Derating Curve")	
	WORKING HUMIDITY	20 ~ 90% RH non-condensing	
	STORAGE TEMP., HUMIDITY	-40 ~ +85℃, 10 ~ 95% RH	
	VIBRATION	10 ~ 500Hz, 2G 10min./1cycle, period for 60min. each along X, Y, Z axes; Mounting: Compliance to IEC60068-2-6	
SAFETY & EMC (Note 3)	SAFETY STANDARDS	BS EN/EN61347-1, BS EN/EN61347-2-11, EAC TP TC 004 approved	
	DALI STANDARDS	Compliance to IEC62386-101	
	WITHSTAND VOLTAGE	I/P-O/P:3KVAC	
	ISOLATION RESISTANCE	I/P-O/P:100M Ohms / 500VDC / 25℃/ 70% RH	
	EMC EMISSION	Compliance to BS EN/EN55015, BS EN/EN61547, BS EN/EN61000-3-2,-3, EAC TP TC 020	
	EMC IMMUNITY	Compliance to BS EN/EN61000-4-2, 3, 4, 5, 6, 8, 11, BS EN/EN55024, BS EN/EN61000-6-2, BS EN/EN61204-3, light industry level, EAC TP TC 020	
OTHERS	MTBF	7018.6K hrs min. Telcordia SR-332 (Bellcore) ; 625.5K hrs min. MIL-HDBK-217F (25℃)	
	DIMENSION	35*90*54.5mm (W*H*D)	145*38*22mm(L*W*H)
	PACKING	0.087Kg;96 pcs/9.5Kg/1.09CUFT	0.084Kg; 60pcs/6Kg/0.48CUFT
NOTE	1. All parameters NOT specially mentioned are measured at 230VAC input, rated load and 25℃ of ambient temperature. 2. Ripple & noise are measured at 20MHz of bandwidth by using a 12" twisted pair-wire terminated with a 0.1uf & 47uf parallel capacitor. 3. The power supply is considered a component which will be installed into a final equipment. The final equipment must be re-confirmed that it still meets EMC directives. (as available on https://www.meanwell.com//Upload/PDF/EMI_statement_en.pdf) ※ Product Liability Disclaimer : For detailed information, please refer to https://www.meanwell.com/serviceDisclaimer.aspx		

■ Block Diagram

fosc: 100KHz

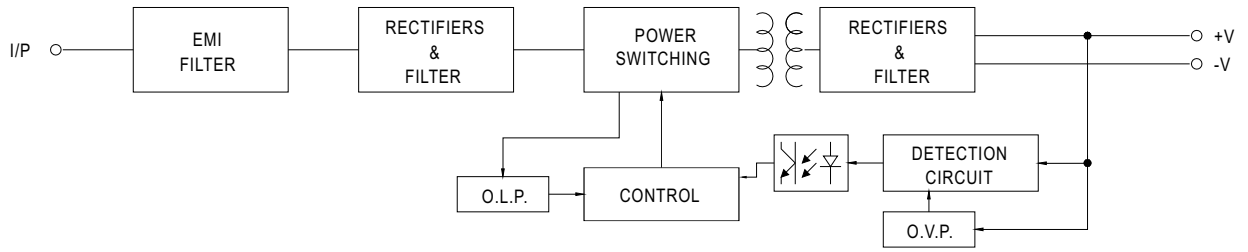

■ Derating Curve

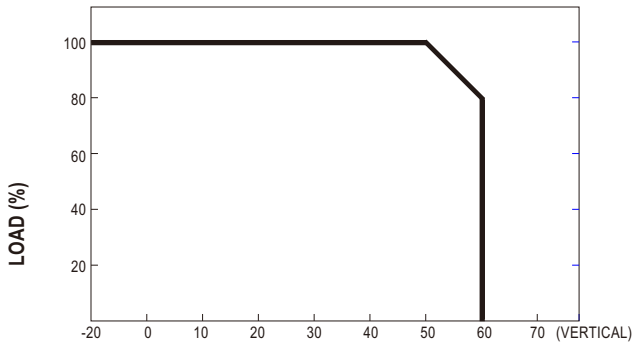

AMBIENT TEMPERATURE (℃)

■ Output Derating VS Input Voltage

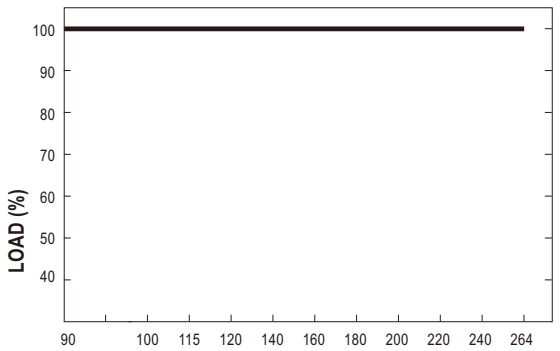

INPUT VOLTAGE (VAC)

Mechanical Specification

※ **R-Type**

(Unit:mm,tolerance±0.5mm)

Case No.985A Unit:mm Tolerance:±1

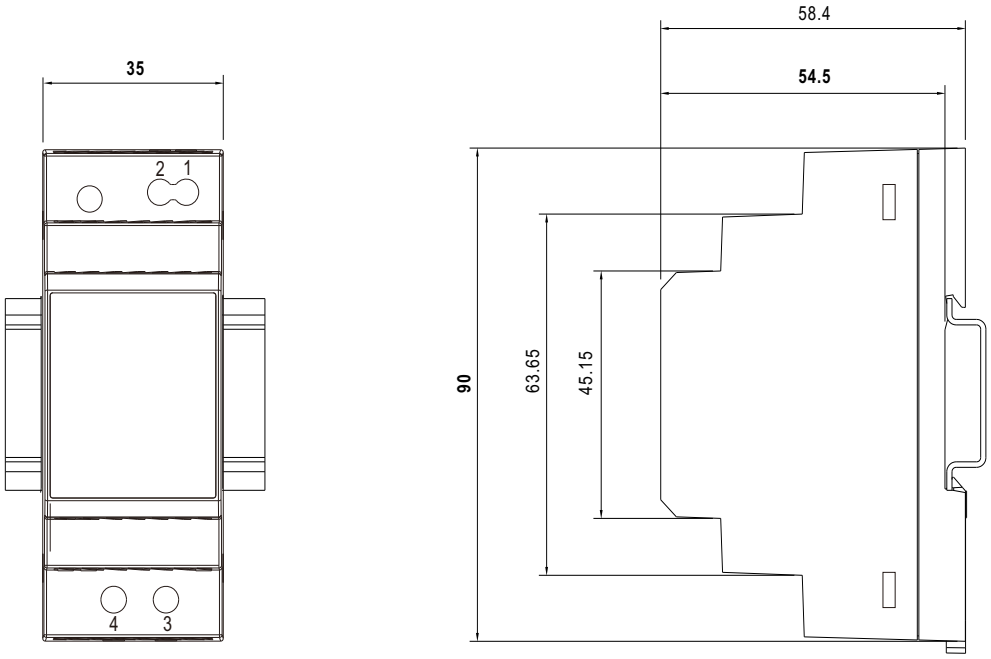

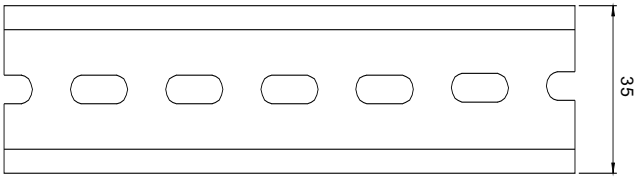

ADMISSIBLE DIN-RAIL:TS35/7.5 OR TS35/15

Terminal Pin No. Assignment

Pin No.	Assignment	Pin No.	Assignment
1	DA-	3	AC/L
2	DA+	4	AC/N

※ **L-Type**

Case No.PLM-25 Unit:mm Tolerance:±1

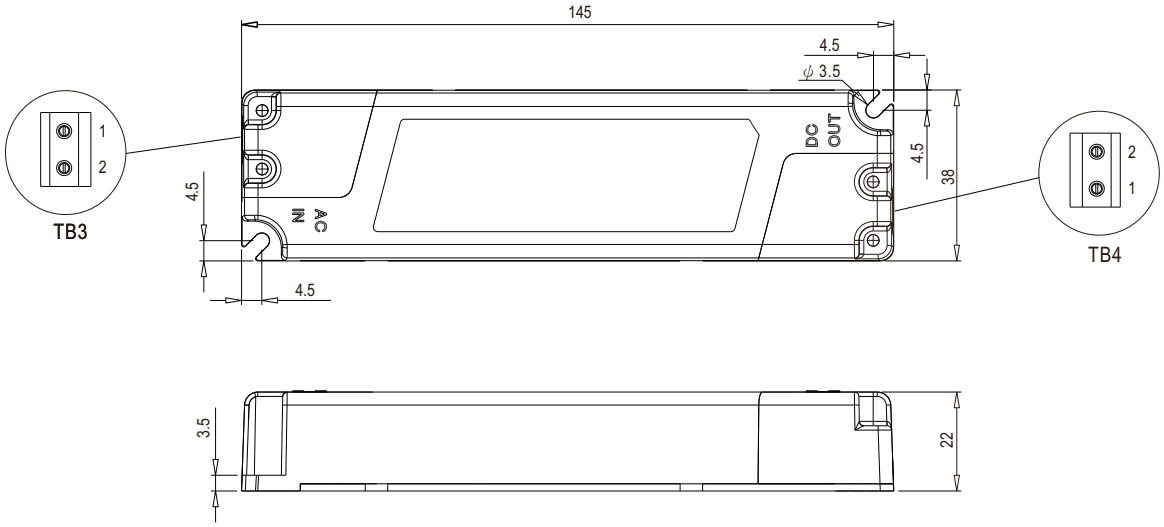

NOTE: The input and output line for using UL1015 18AWG*2C is suggested

Terminal Pin No. Assignment (TB3) :
SWITCHLAB MWX201-75002EB(GRAY)

Pin No.	Assignment
1	AC/N
2	AC/L

Terminal Pin No. Assignment (TB4) :
SWITCHLAB MWX201-75002B(BLUE)

Pin No.	Assignment
1	DA-
2	DA+

■ Installation Manual

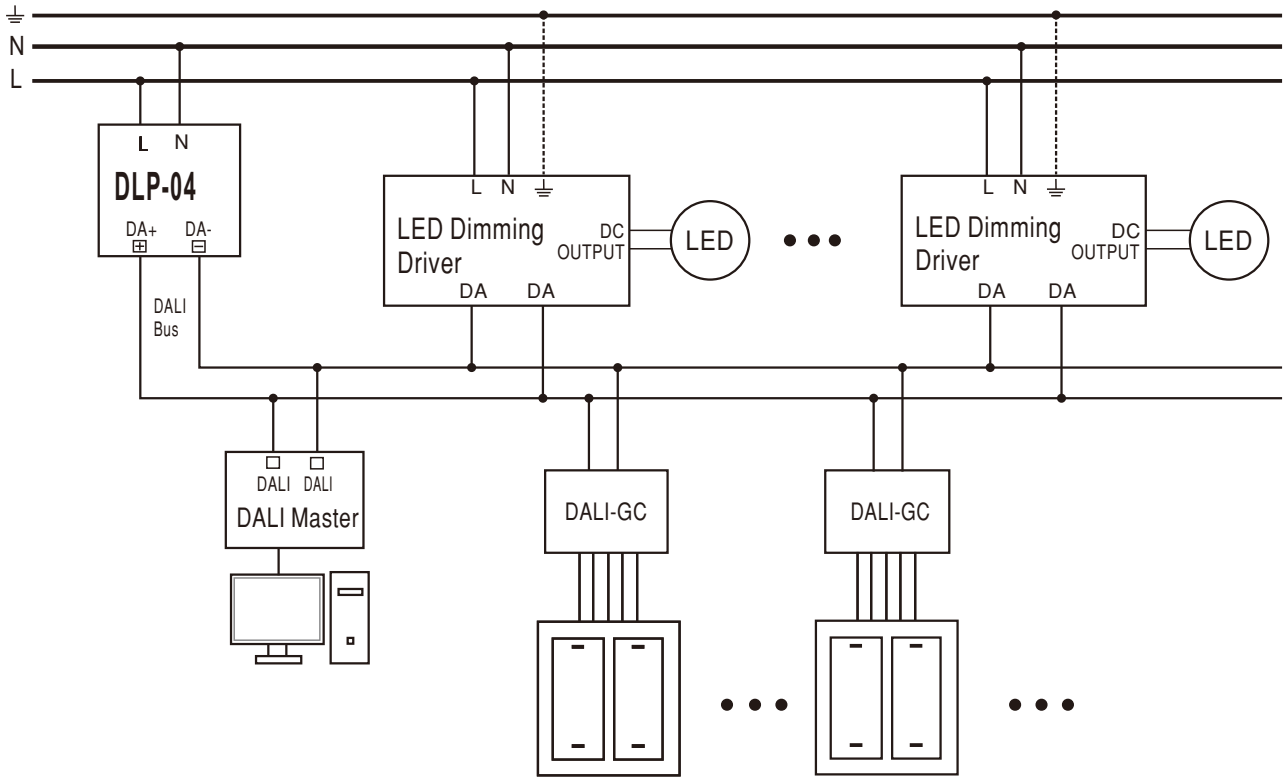

◎Cautions

- Central DALI power supply rated at 240mA(DALI standard allows max.250mA).
- The controls interface of a DALI ballast normally source<2mA,with 64 individual addresses this will source 128mA. The remaining 112mA can be used to power other DALI controls without an internal power supply such as the DALI GC and DALI SC.
- DALI signals are not SELV.Therefore the same procedures should be applied as working with mains voltage.
- Individual DALI circuits must not exceed 240mA.
- The maximum cable length of the DALI signal wires must not exceed 300m or drop more than 2V on the signal line voltage.

■ System start-up timing

1.After external power-on ,timing of a bus power supply shall be as shown in table 1.
2.A receiver shall be ready to receive frames within the maximum receiver start-up time specified in Table 1.
3.A transmitter or a multi-master transmitter shall not start transmissions earlier than the transmitter start-up time specified in Table 1.

◎ **Table 1 – Start-up timing**

	Minimum	Typical	Maximum	Condition
Bus power supply start-up time			250ms	Guaranteed supply current reached
Advanced bus power supply start-up time			400ms	
Integrated bus power supply start-up time			400ms [a]	
			5s [b]	
Receiver start-up time for externally powered bus units, after external power cycle			450ms [e]	
Receiver start-up time for externally powered bus units, after bus power down			100ms	U=10V [d]
Receiver start-up time after bus power down for bus powered bus units			1200ms	
Transmitter start-up time	110ms [c]			
Multi-master transmitter start-up time	110ms			

a Applicable if other bus power supplies are allowed in the system
b Applicable if no other bus power supplies are allowed in the system.
c Not applicable for transmitters of bus units which cannot determine the bus state.
d Idle state, bus voltage measured at the interface of the bus unit.
e If an external power cycle occurred and the bus power is not available within 350 ms, the 100 ms timing is applicable.

◎ **Shows an example of the system start-up timing**

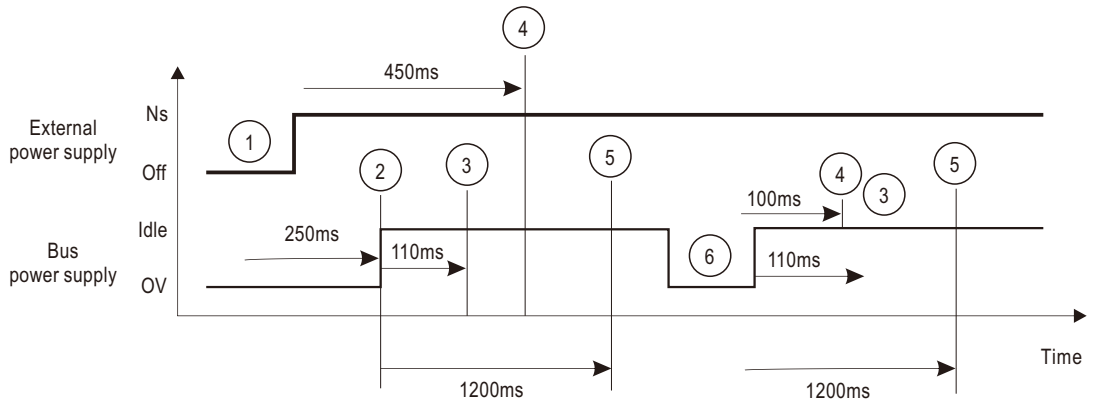

1 External power cycle
2 Latest bus power supply start-up
3 Earliest transmitter start-up
4 Latest receiver start-up for externally powered unit
5 Latest receiver start-up for bus powered unit
6 Bus power down