# 40A DIN Rail Type Redundancy Module

# DRDN40

User's Manual

Video

UL62368-1 IEC62368-1 TPTC004

Automate Industrial Security Network Telecom

## Features

- Support 1+1 and N+1 redundancy system
- 2 channels input and 1 output
- Suitable for redundancy operation of 12V/24V/48V system
- Output current up to 40A
- Cooling by free air convection
- -40~+80°C ultra-wide operating temperature ( >+60°C derating)
- 55mm slim width
- Built-in 2 channels DC OK signal and alarm relay contact
- 3 years warranty

## Applications

- Industrial control system
- Semiconductor fabrication equipment
- Factory automation
- Electro-mechanical apparatus

## GTIN CODE

MW Search: https://www.meanwell.com/serviceGTIN.aspx

## Description

The DRDN40 series is a 40A redundancy module that can be used with a power supply to improve overall system operation reliability. Product key features include:12V/24V/48V input voltage for selection, support N+1 and 1+1 redundancy systems,built-in two rails DC input contacts and single output. The MOSFET technology implemented can reduce heat loss and reduce the voltage difference between the input and output voltages, built-in 2 channels DC OK relay contacts for monitoring output status, ultra-wide operating temperature of -40 to +80°C and narrow width (55mm).

## Model Encoding

**DRDN40 - 24**

- 24 — Intput voltage (12V/24V/48V)
- 40 — Output current (40A)
- DRDN — DIN Rail Redundancy Module

# 40A DIN Rail Type Redundancy Module

# DRDN40

## SPECIFICATION

| | | | | |
|---|---|---|---|---|
| MODEL | | DRDN40-□ | | |
| | | □ =12V, 24V, 48V | | |
| INPUT | NUMBER OF INPUT | 2 Channels | | |
| | DC NORMAL VOLTAGE | 12Vdc | 24Vdc | 48Vdc |
| | DC VOLTAGE RANGE | 9~14Vdc | 19~29Vdc | 36~60Vdc |
| | RATED CURRENT | 0~40A per input Continuous | | |
| | VOLTAGE DROP (Vin-Vout) (max.) | 0.3V | | |
| | PEAK CURRENT | 0~60A per input 5Sec. | | |
| | EFFICIENCY (Typ.) | 98% | | |
| | INPUT REVERSE CURRENT (max.) | 1mA | | |
| | INPUT REVERSE VOLTAGE (max.) | 40Vdc | 40Vdc | 65Vdc |
| OUTPUT | RATED CURRENT | 0~40A, Continuous | | |
| | PEAK CURRENT (max.) | 60A, 5Sec. | | |
| | CAPACITANCE(Typ.) | 320uF | | |
| | STANDBY POWER LOSSES(Typ.) | 1.5W | | |
| PROTECTION | OVERLOAD | <60A,5Sec. No damage | | |
| | SHORT CIRCUIT | <60A,5Sec. No damage | | |
| FUNCTION | REDUNDANCY | For 1+1 redundancy ,and support N+1 redundancy | | |
| | BOTH INPUTS VOLTAGE ALARM | <8.5V or >14.7V (±5%) | <18V or >31V (±5%) | <34.2V or >63V (±5%) |
| | RELAY | 30Vdc/1A resistive load | | |
| | LED STATUS DISPLAY | Green LED OK | | |
| ENVIRONMENT | COOLING | Free air convection | | |
| | WORKING TEMP. Note.2 | -40 ~ +80℃ (Refer to "Derating Curve") | | |
| | WORKING HUMIDITY | 5 ~ 95% RH non-condensing | | |
| | STORAGE TEMP. | -40 ~ +85℃ | | |
| | TEMP. COEFFICIENT | ±0.03%/℃ (0 ~ 60℃ ) | | |
| | VIBRATION | Component:10 ~ 500Hz, 5G 10min./1cycle, 60min. each along X, Y, Z axes; Mounting: Compliance to IEC61373 | | |
| | OPERATING ALTITUDE Note.3 | 5000 meters/OVC II | | |
| SAFETY & EMC (Note.4) | SAFETY STANDARDS | IEC62368-1, UL62368-1, EAC TP TC 004 approved | | |
| | WITHSTAND VOLTAGE | IP/OP - Chassis : 0.5KVac ; IP/OP- Relay : 0.5KVac ; Relay - Chassis : 0.5KVac | | |
| | ISOLATION RESISTANCE | IP/OP - Chassis, IP/OP- Relay, Relay - Chassis:>100M Ohms / 500Vdc / 25℃/ 70% RH | | |
| | EMC EMISSION | **Parameter** | **Standard** | **Test Level / Note** |
| | | Conducted | BS EN/EN55032(CISPR32) | Class B |
| | | Radiated | BS EN/EN55032(CISPR32) | Class B |
| | | Voltage Flicker | ----- | ----- |
| | | Harmonic Current | ----- | ----- |
| | EMC IMMUNITY | BS EN/EN55035, BS EN/EN61000-6-2(BS EN/EN50082-2) | | |
| | | **Parameter** | **Standard** | **Test Level / Note** |
| | | ESD | BS EN/EN61000-4-2 | Level 4, 15KV air ; Level 3, 8KV contact; criteria A |
| | | Radiated | BS EN/EN61000-4-3 | Level 3, 10V/m ; criteria A |
| | | EFT / Burst | BS EN/EN61000-4-4 | Level 3, 2KV ; criteria A |
| | | Surge | BS EN/EN61000-4-5 | Level 3, 1KV/Line-Line ;Level 3, 2KV/Line-Line-Chassis ;criteria A |
| | | Conducted | BS EN/EN61000-4-6 | Level 3, 10V ; criteria A |
| | | Magnetic Field | BS EN/EN61000-4-8 | Level 4, 30A/m ; criteria A |
| OTHERS | MTBF | 1672.9K hrs min. Telcordia SR-332 (Bellcore) ; 499.5K hrs min. MIL-HDBK-217F (25℃) | | |
| | DIMENSION | 55*125.2*100mm (W*H*D) | | |
| | PACKING | 0.5Kg;20psc/11Kg/1.49CUFT | | |

**NOTE**

1. All parameters NOT specially mentioned are measured at normal input(12V/24V/48V) , rated load and 25℃ of ambient temperature.
2. Derating may be needed over high ambient temperature. Please check the derating curve for more details.
3. The ambient temperature derating of 3.5℃/1000m with fanless models and of 5℃/1000m with fan models for operating altitude higher than 2000m(6500ft).
4. The power supply is considered as an independent unit, but the final equipment still need to re-confirm that the whole system complies with the EMC directives. For guidance on how to perform these EMC tests, please refer to "EMI testing of component power supplies." (as available on https://www.meanwell.com//Upload/PDF/EMI_statement_en.pdf )

※ Product Liability Disclaimer : For detailed information, please refer to https://www.meanwell.com/serviceDisclaimer.aspx

## ■ Block Diagram

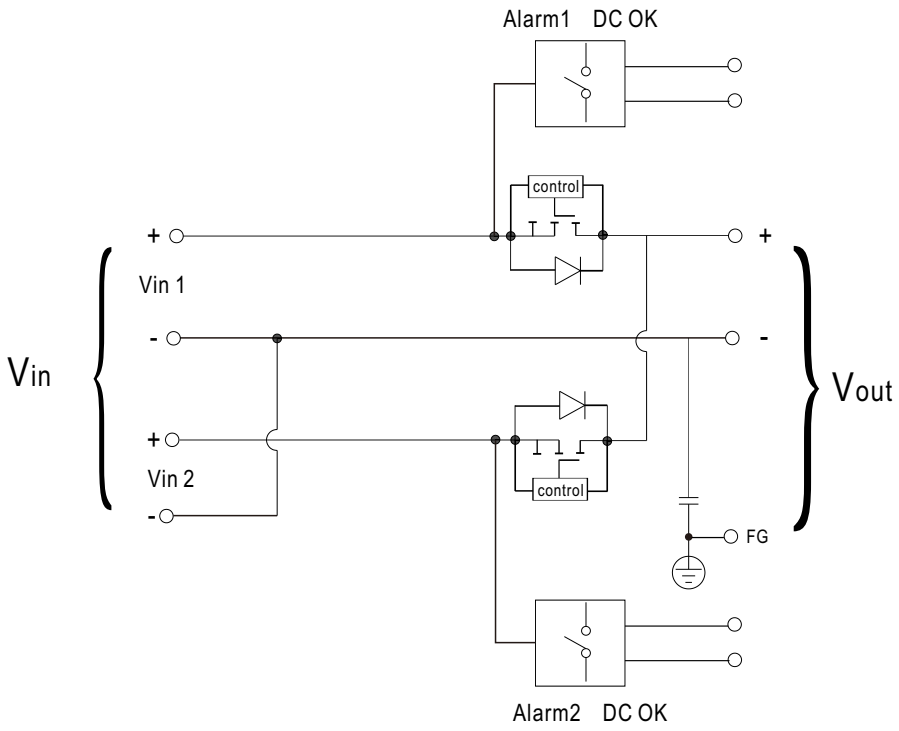


## ■ DC OK Relay Contact

| | |
|---|---|
| Contact Ratings (max.) | 30V/1A resistive load |
| Contact Close(DC OK) | PSU turns on |
| Contact Open(DC Fail) | PSU turns off / over or under input voltage |

## ■ Derating Curve

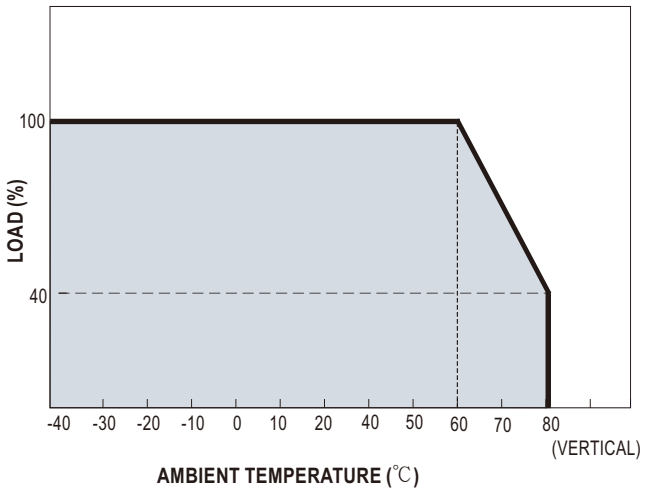


## ■ Output Derating VS Input Voltage

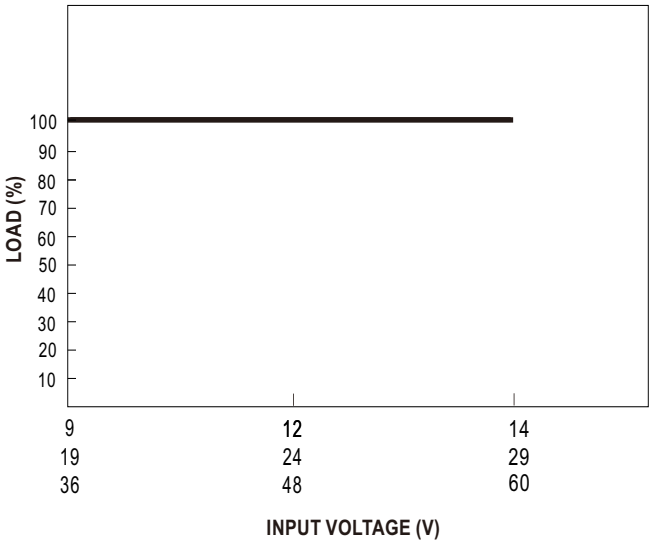

## ■ Typical Application Notes

**1. 1+1 Redundancy:**

Using 1 more PSU as the redundant unit

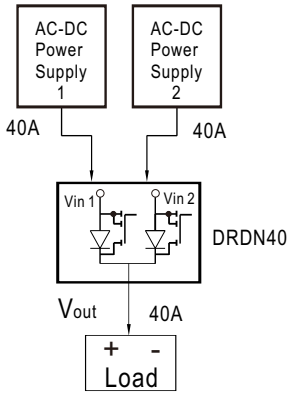


**2. 1+N Redundancy:**

Using more PSUs as the redundant units to increase the reliability

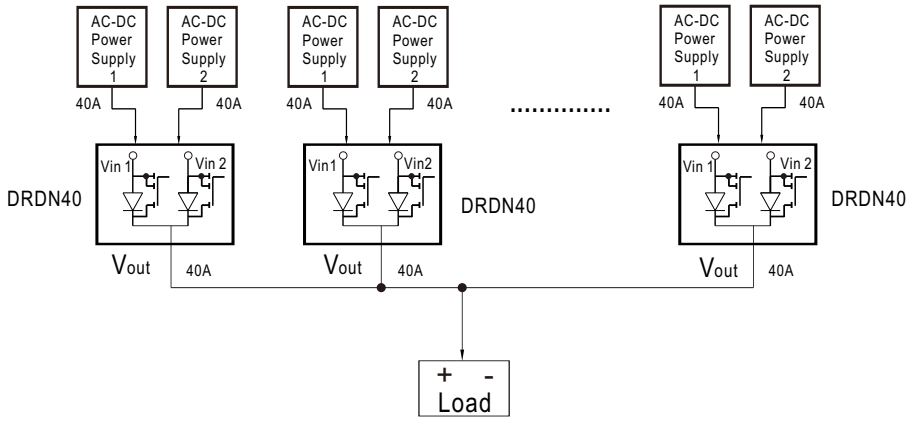


**3. Single Use:**

Connecting only one PSU to one DRDN40 to reduce the stress of the MOSFET and hence increase the reliability

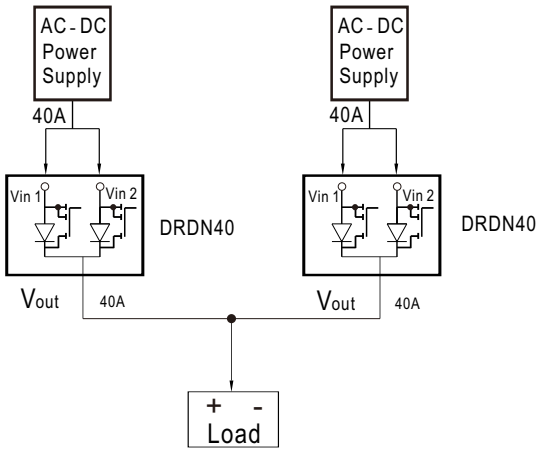

## ■ Mechanical Specification

(Unit: mm , tolerance ± 1mm)

Case No.923E

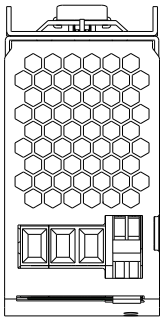

Top View

Terminal Pin No. Assignment (TB1,TB2,TB3)

| Pin No. | Assignment |
|---|---|
| 1,2 | Alarm1 DC OK |
| 3,4 | Alarm2 DC OK |
| 5 | FG |
| 6 | DC output +Vout |
| 7 | DC output -Vout |

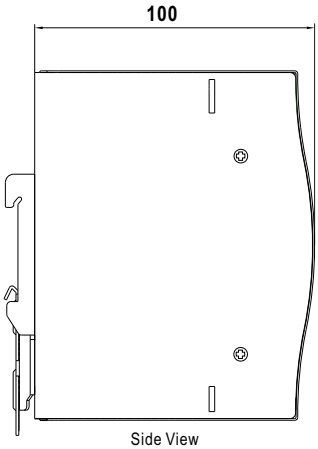


Side View

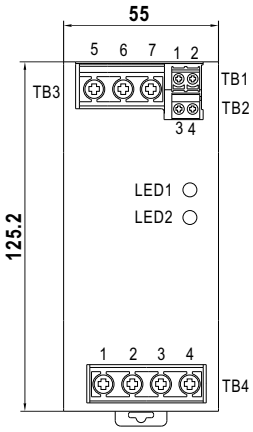


Front View

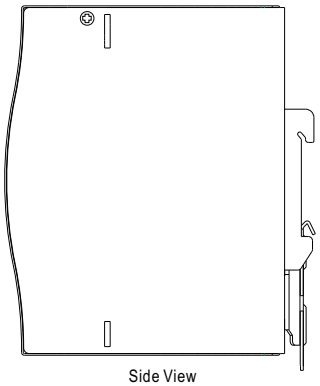

Side View

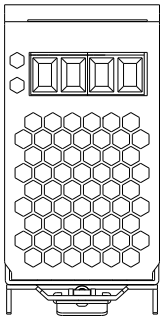

Bottom View

Terminal Pin No. Assignment (TB4)

| Pin No. | Assignment |
|---|---|
| 1 | DC input +Vin1 |
| 2 | DC input -Vin1 |
| 3 | DC input +Vin2 |
| 4 | DC input -Vin2 |

## ■ Installation Instruction

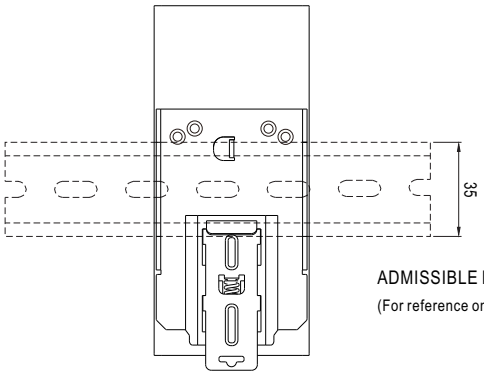


Back View

ADMISSIBLE DIN-RAIL:TS35/7.5 OR TS35/15

(For reference only. Not included with unit.)

This series fits DIN rail TS35/7.5 or TS35/15.
For installation details, please refer to the Instruction manual.

## ■ Installation Manual

Please refer to : http://www.meanwell.com/manual.html