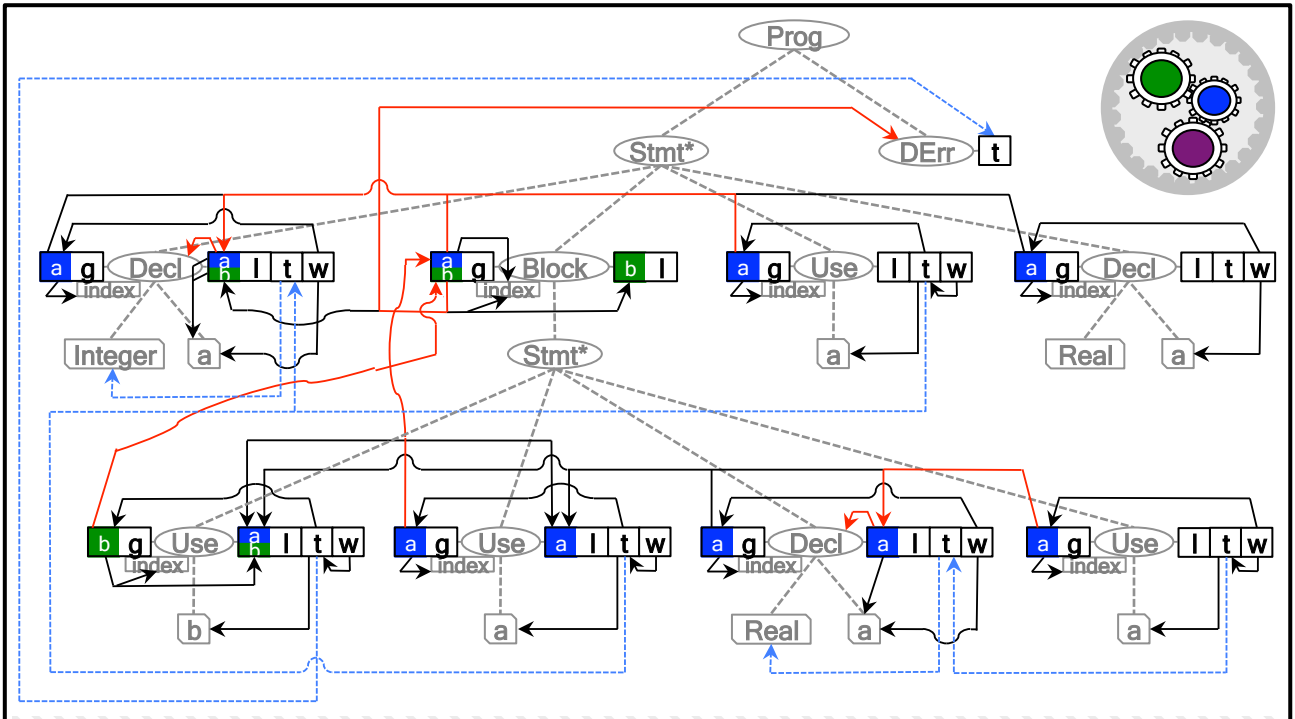
Prog
Stmt*
DErr
t
Decl
Block
Use
Decl
Integer
Real
Stmt*
Use
Use
Decl
Use
Real

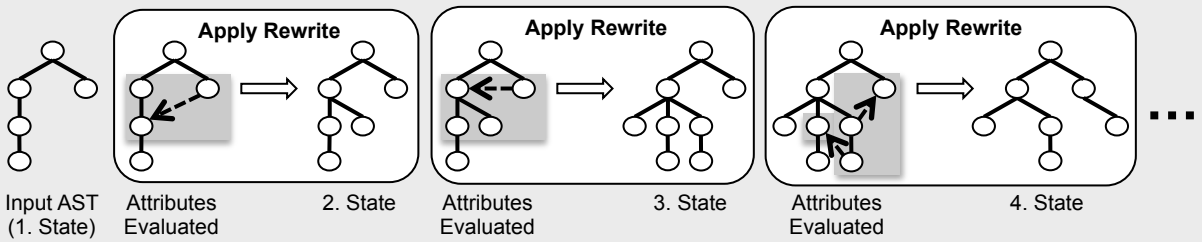
Apply Rewrite
Apply Rewrite
Apply Rewrite
Input AST
(1. State)
Attributes
Evaluated
2. State
Attributes
Evaluated
3. State
Attributes
Evaluated
4. State

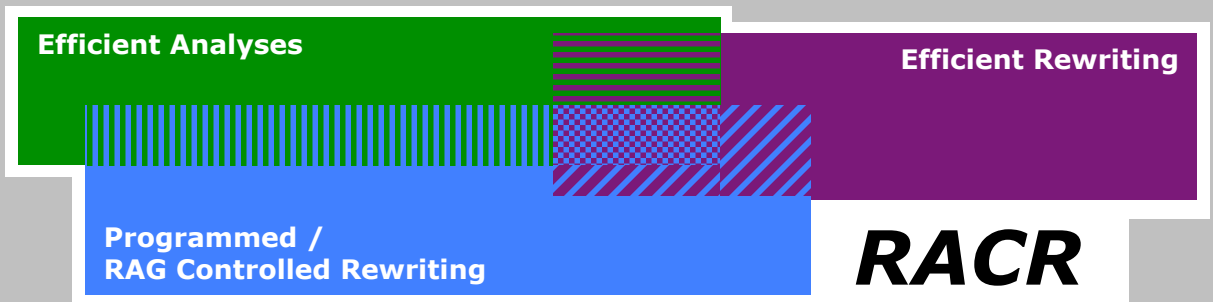
Efficient Analyses
Efficient Rewriting
Programmed /
RAG Controlled Rewriting
RACR