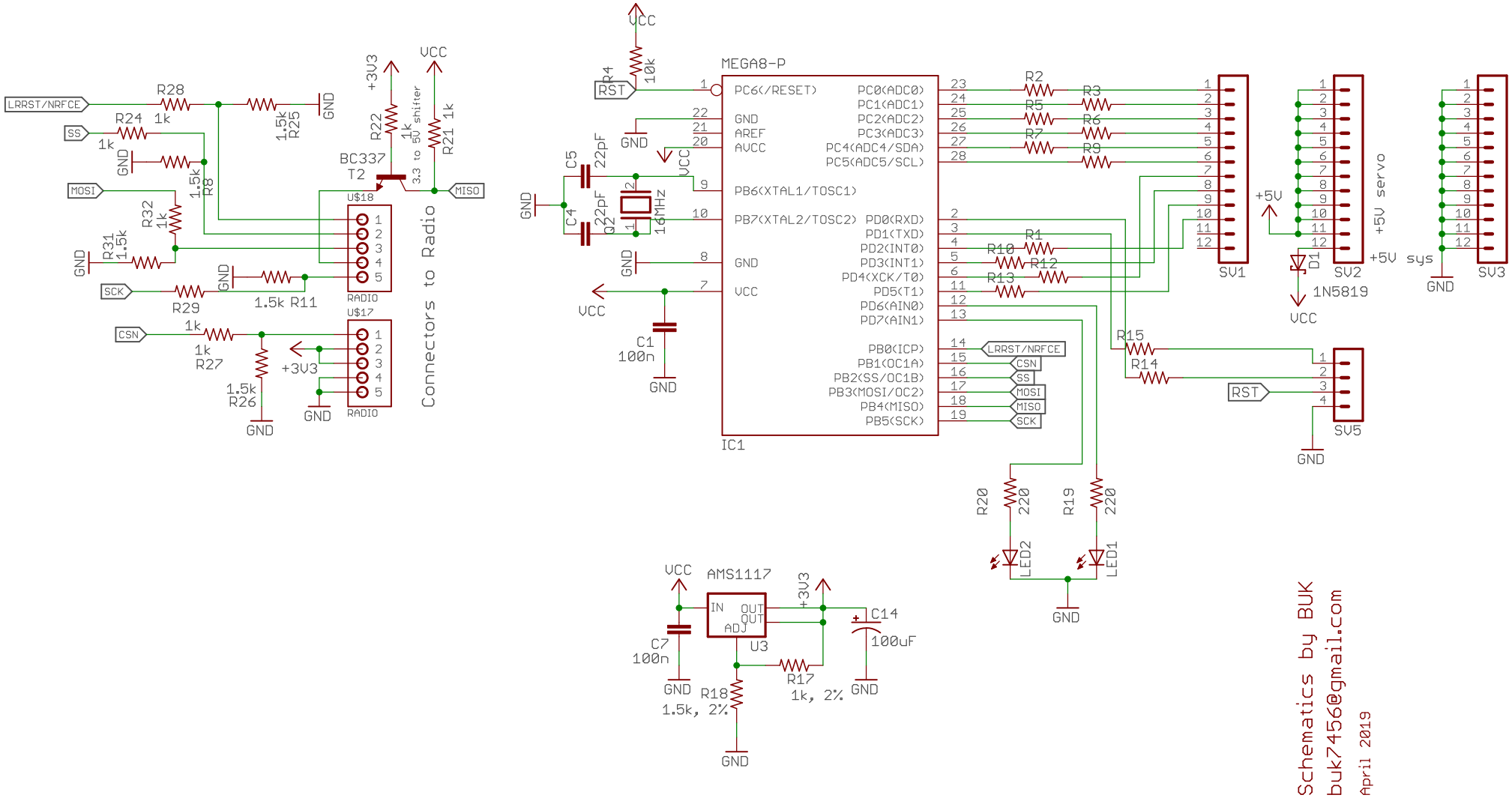

Schematics by BUK
buk7456@gmail.com
April 2019