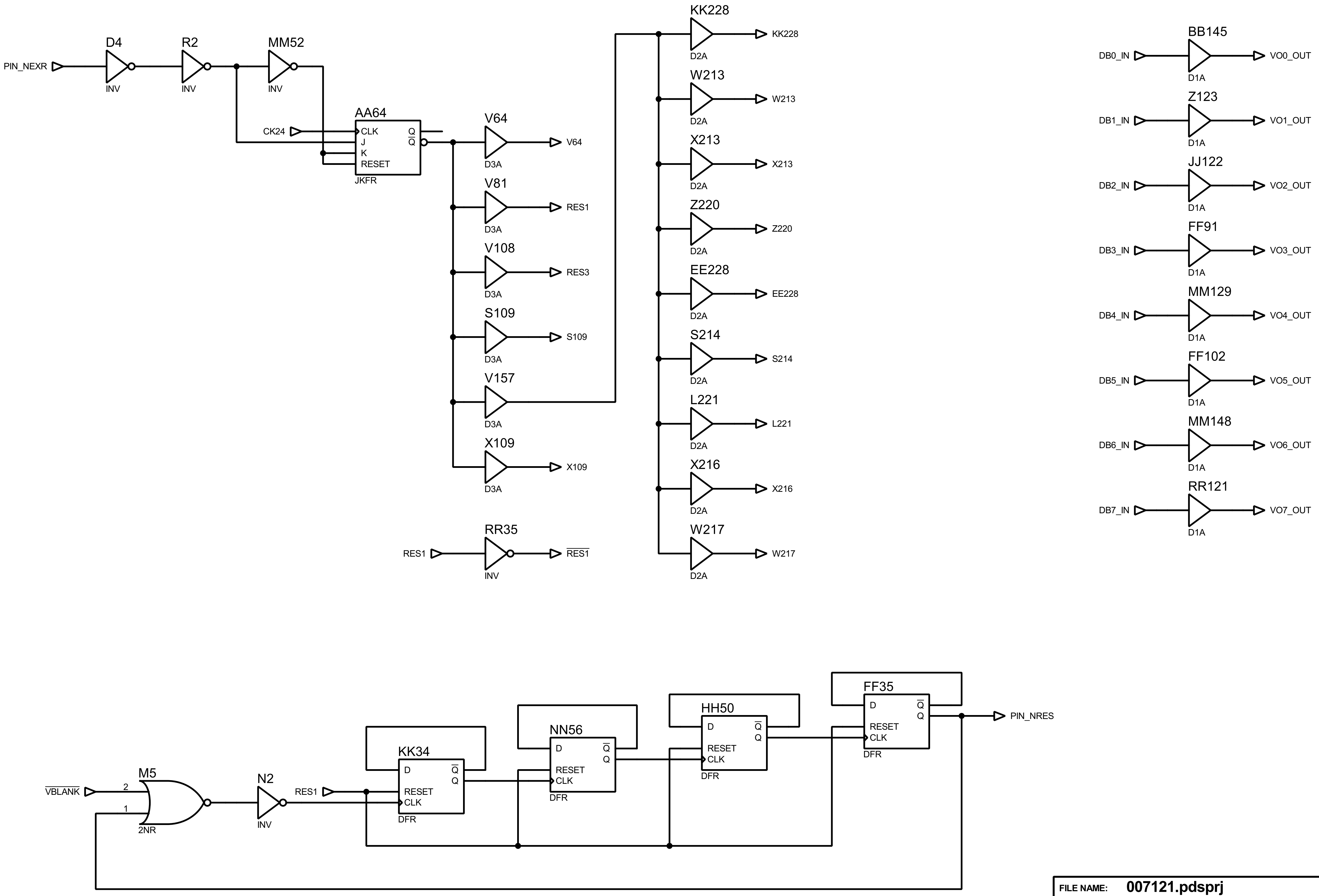
PIN_NEXR
D4
INV
R2
INV
MM52
INV
CK24
AA64
CLK
J
K
RESET
Q
Q̄
JKFR
V64
D3A
V64
V81
D3A
RES1
V108
D3A
RES3
S109
D3A
S109
V157
D3A
X109
D3A
X109
RR35
RES1
INV
RES1
KK228
D2A
KK228
W213
D2A
W213
X213
D2A
X213
Z220
D2A
Z220
EE228
D2A
EE228
S214
D2A
S214
L221
D2A
L221
X216
D2A
X216
W217
D2A
W217
BB145
DB0_IN
D1A
VO0_OUT
Z123
DB1_IN
D1A
VO1_OUT
JJ122
DB2_IN
D1A
VO2_OUT
FF91
DB3_IN
D1A
VO3_OUT
MM129
DB4_IN
D1A
VO4_OUT
FF102
DB5_IN
D1A
VO5_OUT
MM148
DB6_IN
D1A
VO6_OUT
RR121
DB7_IN
D1A
VO7_OUT
VBLANK
2
1
M5
2NR
N2
INV
RES1
KK34
D
Q̄
Q
RESET
CLK
DFR
NN56
D
Q̄
Q
RESET
CLK
DFR
HH50
D
Q̄
Q
RESET
CLK
DFR
FF35
D
Q̄
Q
RESET
CLK
DFR
PIN_NRES

FILE NAME: **007121.pdsprj**

DESIGN TITLE: **Konami 007121**
RESET

BY: **Sean Gonsalves** **REV:** **0**

DATE:
03/04/2021

PAGE:
1 of 52

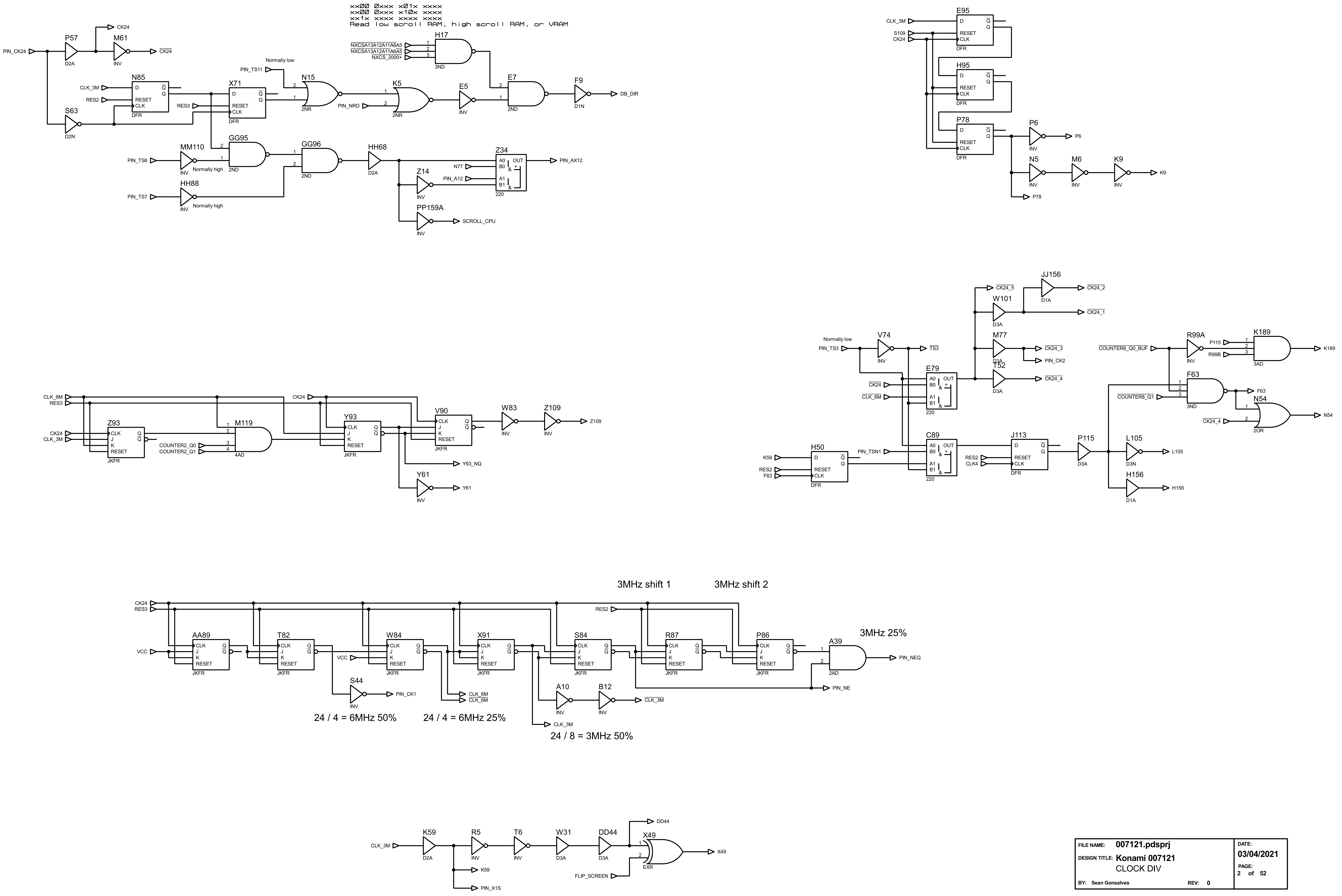
xx00 0xxx x01x xxxx
xx00 0xxx x10x xxxx
xx1x xxxx xxxx xxxx
Read low scroll RAM, high scroll RAM, or VRAM
PIN_CK24
P57
D2A
CK24
M61
INV
CK24
S63
D2N
N85
CLK_3M
RES2
DFR
X71
RES3
PIN_TS11
Normally low
N15
2NR
K5
PIN_NRD
E5
E7
2ND
F9
D1N
DB_DIR
H17
3ND
NXCSA13A12A11A6A5
NXCSA13A12A11A6A5
NXCS_2000+
PIN_TS6
MM110
Normally high
GG95
GG96
HH68
Z34
N77
PIN_A12
PIN_AX12
Z14
PP159A
SCROLL_CPU
PIN_TS7
HH88
Normally high
E95
S109
CK24
H95
P78
P6
N5
M6
K9
CLK_6M
RES3
Z93
JKFR
CK24
CLK_3M
M119
COUNTER2_Q0
COUNTER2_Q1
4AD
Y93
V90
W83
Z109
Y93_NQ
Y61
JJ156
CK24_5
CK24_2
W101
CK24_1
M77
CK24_3
PIN_CK2
T52
CK24_4
Normally low
PIN_TS3
V74
TS3
E79
CK24
CLK_6M
R99A
P115
R99B
K189
COUNTER8_Q0_BUF
F63
COUNTER8_Q1
N54
CK24_4
2OR
H50
K59
RES2
F63
PIN_TSN1
C89
J113
RES2
CLK4
P115
L105
H156
3MHz shift 1
3MHz shift 2
3MHz 25%
CK24
RES3
VCC
AA89
T82
W84
X91
S84
R87
P86
RES2
A39
PIN_NEQ
PIN_NE
VCC
S44
PIN_CK1
CLK_6M
CLK_6M
A10
B12
CLK_3M
CLK_3M
24 / 4 = 6MHz 50%
24 / 4 = 6MHz 25%
24 / 8 = 3MHz 50%
CLK_3M
K59
R5
T6
W31
DD44
X49
EXR
DD44
FLIP_SCREEN
K59
PIN_X1S
X49

FILE NAME: **007121.pdsprj**
DESIGN TITLE: **Konami 007121**
CLOCK DIV
BY: Sean Gonsalves
REV: 0
DATE: **03/04/2021**
PAGE: 2 of 52

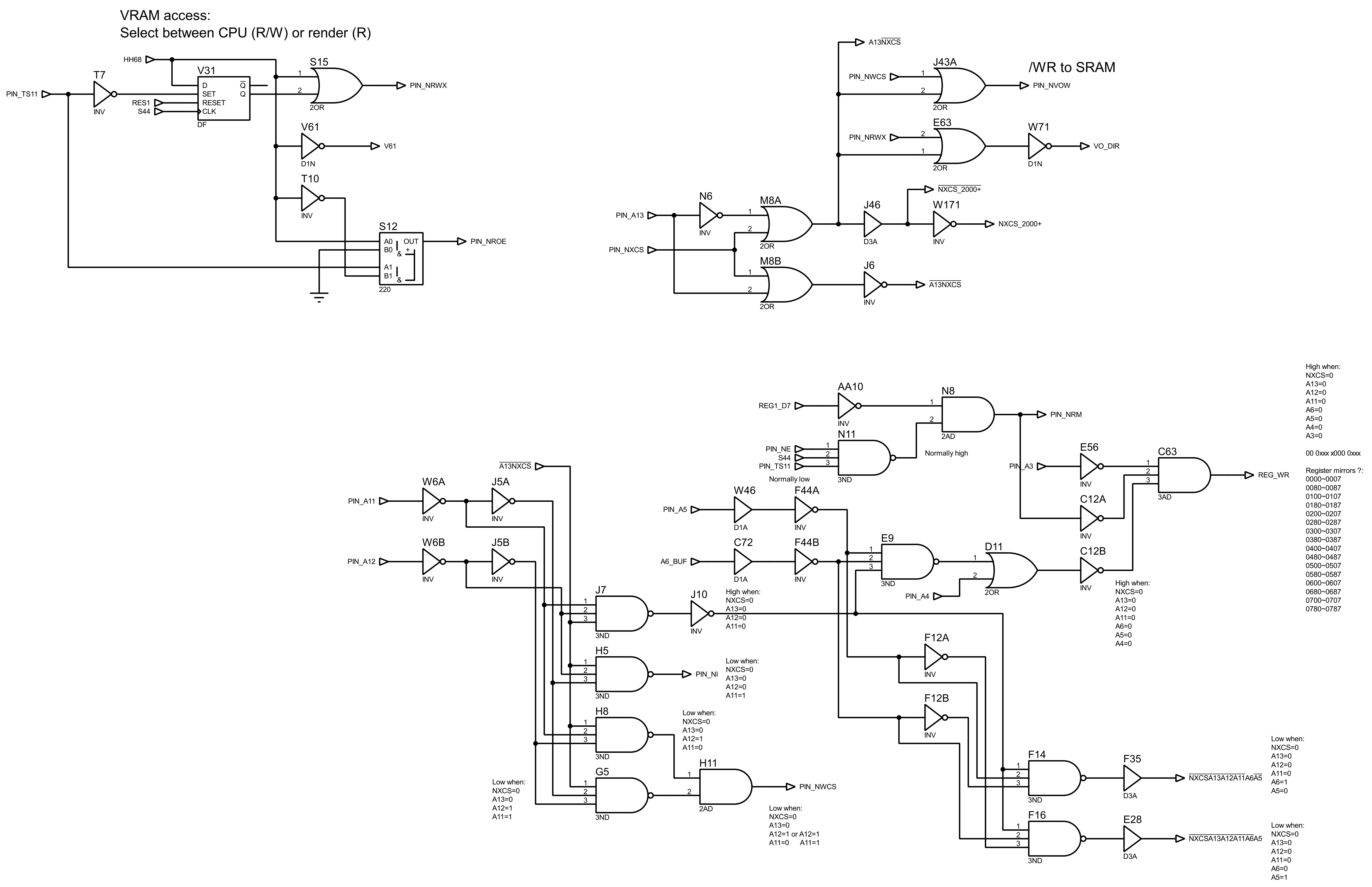
VRAM access:
Select between CPU (R/W) or render (R)
HH68
PIN_TS11
T7
INV
V31
D
SET
RESET
CLK
Q
Q
DF
RES1
S44
S15
1
2
2OR
PIN_NRWX
V61
D1N
V61
T10
INV
S12
A0
B0
A1
B1
&
&
+
OUT
220
PIN_NROE
A13NXCS
PIN_NWCS
J43A
1
2
2OR
PIN_NVOW
/WR to SRAM
PIN_NRWX
E63
2
1
2OR
W71
D1N
VO_DIR
PIN_A13
N6
INV
M8A
1
2
2OR
PIN_NXCS
J46
D3A
NXCS_2000+
W171
INV
NXCS_2000+
M8B
1
2
2OR
J6
INV
A13NXCS
REG1_D7
AA10
INV
N8
1
2
2AD
PIN_NRM
PIN_NE
S44
PIN_TS11
N11
1
2
3
3ND
Normally low
Normally high
PIN_A3
E56
INV
C12A
INV
C63
1
2
3
3AD
REG_WR
High when:
NXCS=0
A13=0
A12=0
A11=0
A6=0
A5=0
A4=0
A3=0
00 0xxx x000 0xxx
Register mirrors ?:
0000~0007
0080~0087
0100~0107
0180~0187
0200~0207
0280~0287
0300~0307
0380~0387
0400~0407
0480~0487
0500~0507
0580~0587
0600~0607
0680~0687
0700~0707
0780~0787
A13NXCS
PIN_A11
W6A
INV
J5A
INV
PIN_A12
W6B
INV
J5B
INV
PIN_A5
W46
D1A
F44A
INV
A6_BUF
C72
D1A
F44B
INV
E9
1
2
3
3ND
D11
1
2
2OR
PIN_A4
C12B
INV
High when:
NXCS=0
A13=0
A12=0
A11=0
A6=0
A5=0
A4=0
J7
1
2
3
3ND
J10
INV
High when:
NXCS=0
A13=0
A12=0
A11=0
H5
1
2
3
3ND
PIN_NI
Low when:
NXCS=0
A13=0
A12=0
A11=1
H8
1
2
3
3ND
Low when:
NXCS=0
A13=0
A12=1
A11=0
G5
1
2
3
3ND
Low when:
NXCS=0
A13=0
A12=1
A11=1
H11
1
2
2AD
PIN_NWCS
Low when:
NXCS=0
A13=0
A12=1 or A12=1
A11=0 A11=1
F12A
INV
F12B
INV
F14
1
2
3
3ND
F35
D3A
NXCSA13A12A11A6A5
Low when:
NXCS=0
A13=0
A12=0
A11=0
A6=1
A5=0
F16
1
2
3
3ND
E28
D3A
NXCSA13A12A11A6A5
Low when:
NXCS=0
A13=0
A12=0
A11=0
A6=0
A5=1

FILE NAME: **007121.pdsprj**	DATE: **03/04/2021**
DESIGN TITLE: **Konami 007121** ADDRESS DECODING	PAGE: **3 of 52**
BY: **Sean Gonsalves** REV: **0**	

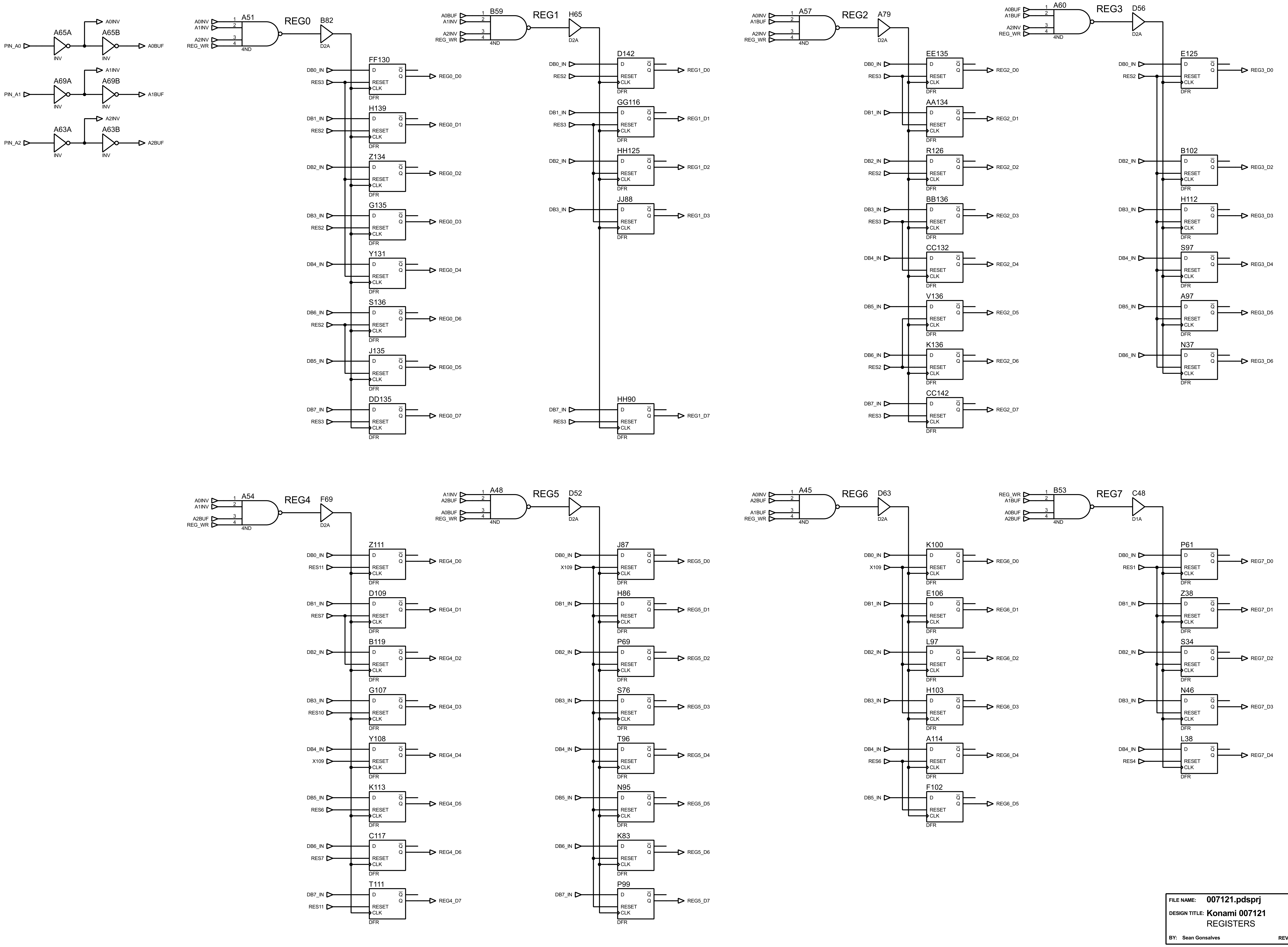
PIN_A0
A65A
INV
A65B
INV
A0INV
A0BUF
PIN_A1
A69A
A69B
A1INV
A1BUF
PIN_A2
A63A
A63B
A2INV
A2BUF
A0INV
A1INV
A2INV
REG_WR
1
2
3
4
A51
4ND
REG0
B82
D2A
D
Q̄
Q
RESET
CLK
DFR
FF130
DB0_IN
RES3
REG0_D0
H139
DB1_IN
RES2
REG0_D1
Z134
DB2_IN
REG0_D2
G135
DB3_IN
RES2
REG0_D3
Y131
DB4_IN
REG0_D4
S136
DB6_IN
RES2
REG0_D6
J135
DB5_IN
REG0_D5
DD135
DB7_IN
RES3
REG0_D7
A0BUF
A1INV
A2INV
REG_WR
B59
4ND
REG1
H65
D2A
D142
DB0_IN
RES2
REG1_D0
GG116
DB1_IN
RES3
REG1_D1
HH125
DB2_IN
REG1_D2
JJ88
DB3_IN
REG1_D3
HH90
DB7_IN
RES3
REG1_D7
A0INV
A1BUF
A2INV
REG_WR
A57
4ND
REG2
A79
D2A
EE135
DB0_IN
RES3
REG2_D0
AA134
DB1_IN
REG2_D1
R126
DB2_IN
RES2
REG2_D2
BB136
DB3_IN
RES3
REG2_D3
CC132
DB4_IN
REG2_D4
V136
DB5_IN
REG2_D5
K136
DB6_IN
RES2
REG2_D6
CC142
DB7_IN
RES3
REG2_D7
A0BUF
A1BUF
A2INV
REG_WR
A60
4ND
REG3
D56
D2A
E125
DB0_IN
RES2
REG3_D0
B102
DB2_IN
REG3_D2
H112
DB3_IN
REG3_D3
S97
DB4_IN
REG3_D4
A97
DB5_IN
REG3_D5
N37
DB6_IN
REG3_D6
A0INV
A1INV
A2BUF
REG_WR
A54
4ND
REG4
F69
D2A
Z111
DB0_IN
RES11
REG4_D0
D109
DB1_IN
RES7
REG4_D1
B119
DB2_IN
REG4_D2
G107
DB3_IN
RES10
REG4_D3
Y108
DB4_IN
X109
REG4_D4
K113
DB5_IN
RES6
REG4_D5
C117
DB6_IN
RES7
REG4_D6
T111
DB7_IN
RES11
REG4_D7
A1INV
A2BUF
A0BUF
REG_WR
A48
4ND
REG5
D52
D2A
J87
DB0_IN
X109
REG5_D0
H86
DB1_IN
REG5_D1
P69
DB2_IN
REG5_D2
S76
DB3_IN
REG5_D3
T96
DB4_IN
REG5_D4
N95
DB5_IN
REG5_D5
K83
DB6_IN
REG5_D6
P99
DB7_IN
REG5_D7
A0INV
A2BUF
A1BUF
REG_WR
A45
4ND
REG6
D63
D2A
K100
DB0_IN
X109
REG6_D0
E106
DB1_IN
REG6_D1
L97
DB2_IN
REG6_D2
H103
DB3_IN
REG6_D3
A114
DB4_IN
RES6
REG6_D4
F102
DB5_IN
REG6_D5
REG_WR
A1BUF
A0BUF
A2BUF
B53
4ND
REG7
C48
D1A
P61
DB0_IN
RES1
REG7_D0
Z38
DB1_IN
REG7_D1
S34
DB2_IN
REG7_D2
N46
DB3_IN
REG7_D3
L38
DB4_IN
RES4
REG7_D4

FILE NAME: **007121.pdsprj**	DATE: **03/04/2021**
DESIGN TITLE: **Konami 007121** REGISTERS	PAGE: 4 of 52
BY: Sean Gonsalves REV: 0	

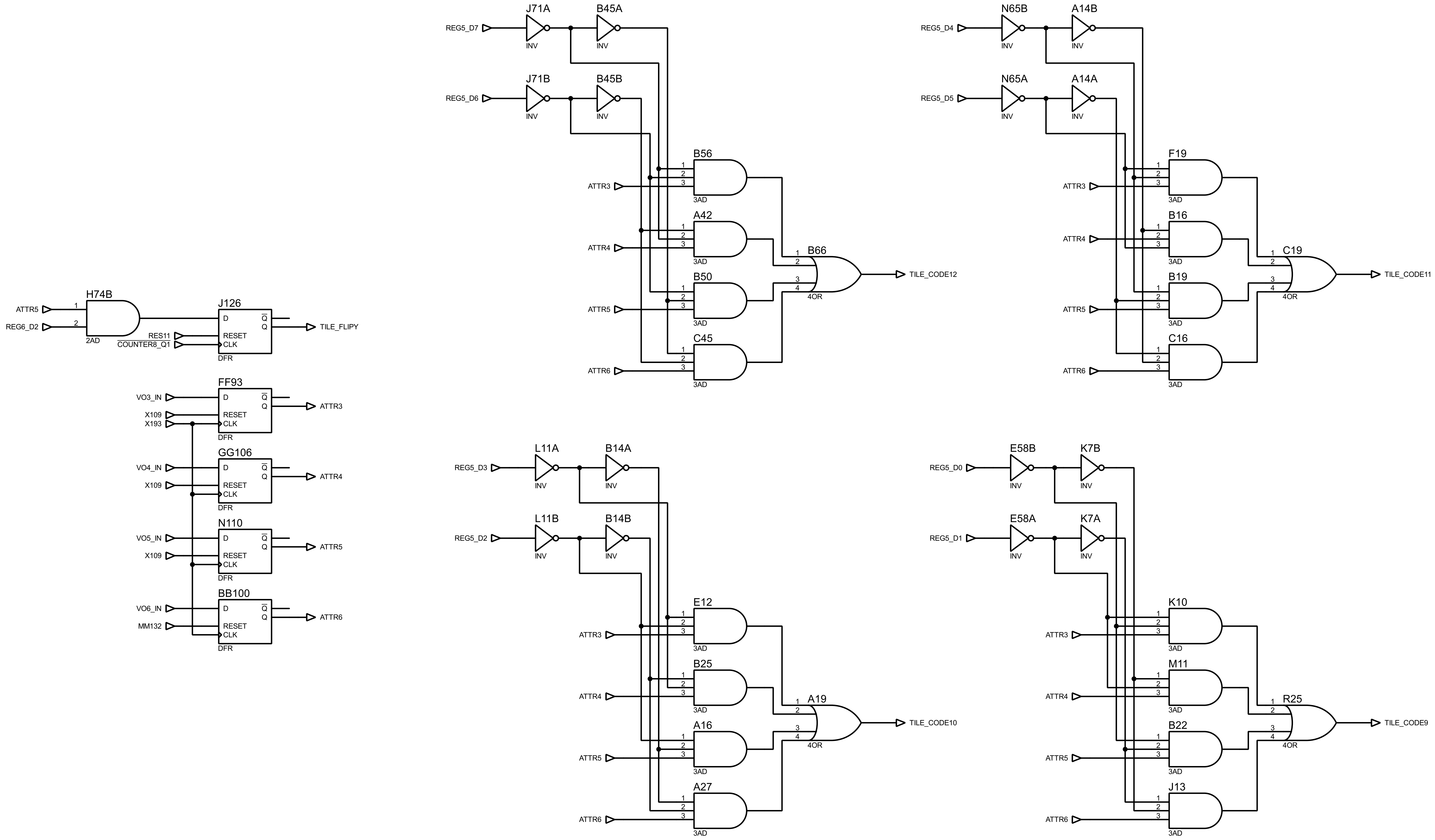
H74B
ATTR5
REG6_D2
1
2
2AD
J126
D
Q̅
Q
RESET
CLK
DFR
RES11
COUNTER8_Q1
TILE_FLIPY
FF93
VO3_IN
X109
X193
ATTR3
GG106
VO4_IN
X109
ATTR4
N110
VO5_IN
X109
ATTR5
BB100
VO6_IN
MM132
ATTR6
J71A
B45A
REG5_D7
INV
J71B
B45B
REG5_D6
B56
A42
B50
C45
3AD
ATTR3
ATTR4
ATTR5
ATTR6
B66
4OR
TILE_CODE12
N65B
A14B
REG5_D4
N65A
A14A
REG5_D5
F19
B16
B19
C16
C19
TILE_CODE11
L11A
B14A
REG5_D3
L11B
B14B
REG5_D2
E12
B25
A16
A27
A19
TILE_CODE10
E58B
K7B
REG5_D0
E58A
K7A
REG5_D1
K10
M11
B22
J13
R25
TILE_CODE9

FILE NAME: **007121.pdsprj**

DESIGN TITLE: **Konami 007121**
REG5

BY: **Sean Gonsalves**
REV: **0**

DATE:
03/04/2021

PAGE:
5 of 52

Select NMI trigger:
Reg7 D4=0: 16 scanlines
Reg7 D4=1: 32 scanlines

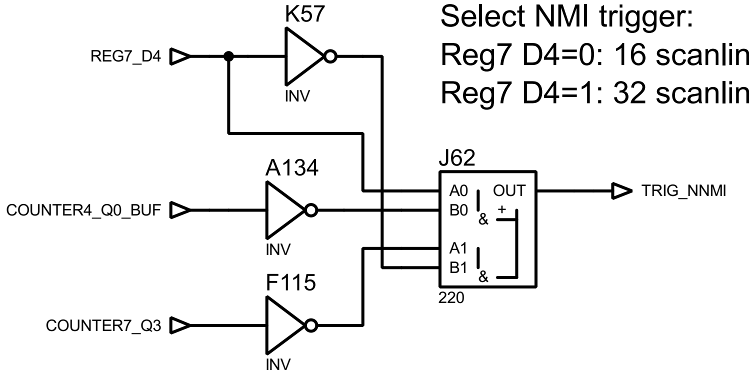

K57
REG7_D4
INV
A134
COUNTER4_Q0_BUF
INV
F115
COUNTER7_Q3
INV
J62
A0
B0
A1
B1
&
&
+
OUT
220
TRIG_NNMI

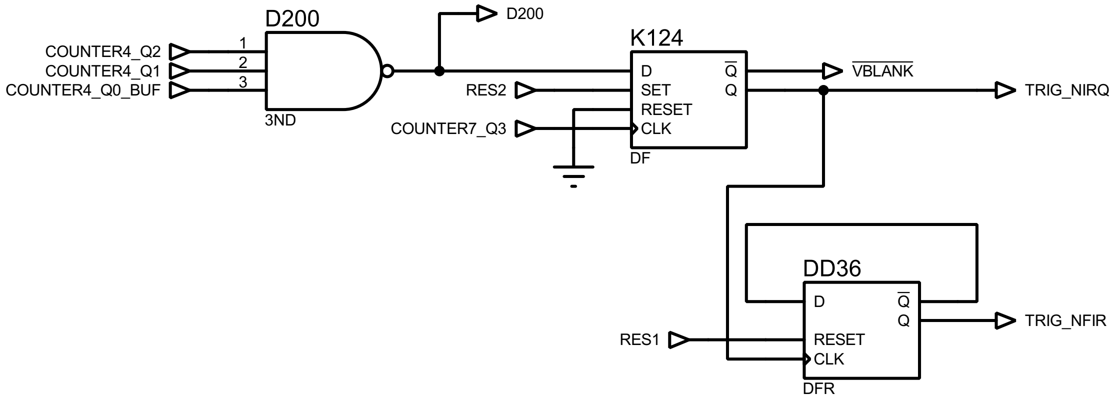

D200
COUNTER4_Q2
COUNTER4_Q1
COUNTER4_Q0_BUF
1
2
3
3ND
D200
K124
D
SET
RESET
CLK
Q̅
Q
DF
RES2
COUNTER7_Q3
VBLANK
TRIG_NIRQ
DD36
D
RESET
CLK
Q̅
Q
DFR
RES1
TRIG_NFIR

Scanline interrupt

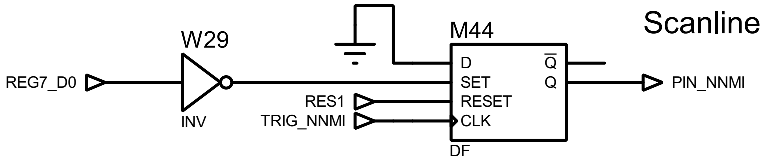

W29
REG7_D0
INV
RES1
TRIG_NNMI
M44
D
SET
RESET
CLK
Q̅
Q
DF
PIN_NNMI

V-blank interrupt

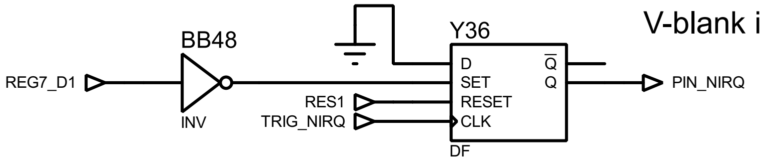

BB48
REG7_D1
INV
RES1
TRIG_NIRQ
Y36
D
SET
RESET
CLK
Q̅
Q
DF
PIN_NIRQ

One-out-of-two v-blank
interrupt ?

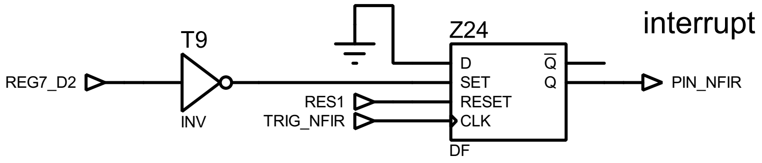

T9
REG7_D2
INV
RES1
TRIG_NFIR
Z24
D
SET
RESET
CLK
Q̅
Q
DF
PIN_NFIR

FILE NAME: **007121.pdsprj**
DESIGN TITLE: **Konami 007121**
INTERRUPTS
BY: Sean Gonsalves
REV: 0
DATE: **03/04/2021**
PAGE: 6 of 52
TIME: 00:06:09

REG3_D6: MAME says it hides the leftmost and rightmost 8px columns

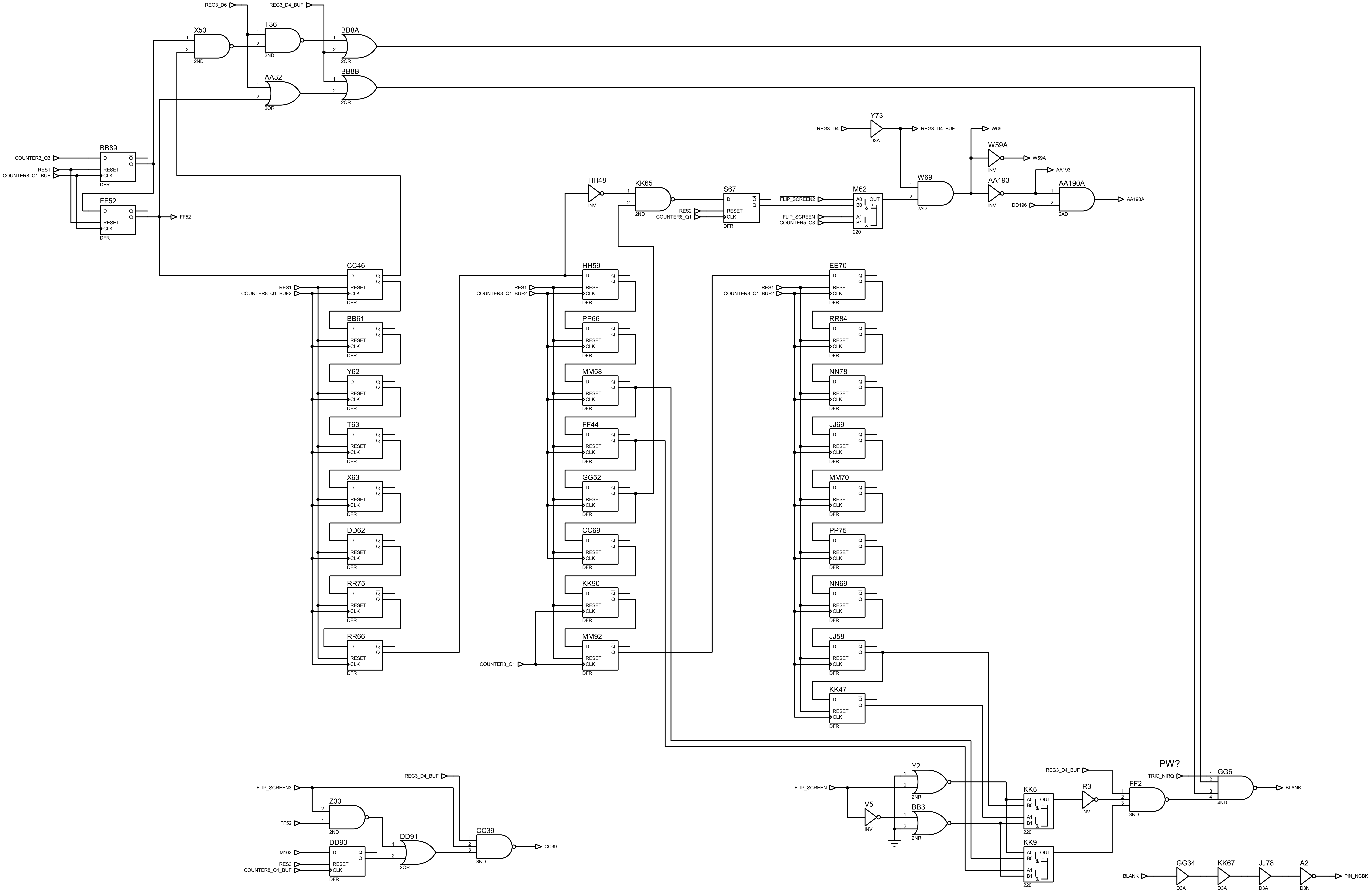
REG3_D6
REG3_D4_BUF
X53
2ND
T36
2ND
BB8A
2OR
BB8B
2OR
AA32
2OR
COUNTER3_Q3
RES1
COUNTER8_Q1_BUF
BB89
DFR
FF52
DFR
FF52
HH48
INV
KK65
2ND
S67
DFR
RES2
COUNTER8_Q1
FLIP_SCREEN2
M62
220
FLIP_SCREEN
COUNTER5_Q3
Y73
D3A
REG3_D4
REG3_D4_BUF
W69
W59A
INV
W59A
AA193
W69
2AD
AA193
INV
DD196
AA190A
2AD
AA190A
RES1
COUNTER8_Q1_BUF2
CC46
BB61
Y62
T63
X63
DD62
RR75
RR66
RES1
COUNTER8_Q1_BUF2
HH59
PP66
MM58
FF44
GG52
CC69
KK90
MM92
COUNTER3_Q1
RES1
COUNTER8_Q1_BUF2
EE70
RR84
NN78
JJ69
MM70
PP75
NN69
JJ58
KK47
DFR
FLIP_SCREEN3
REG3_D4_BUF
Z33
2ND
FF52
M102
RES3
COUNTER8_Q1_BUF
DD93
DFR
DD91
2OR
CC39
3ND
CC39
FLIP_SCREEN
Y2
2NR
V5
INV
BB3
2NR
KK5
220
KK9
220
R3
INV
REG3_D4_BUF
FF2
3ND
PW?
TRIG_NIRQ
GG6
4ND
BLANK
BLANK
GG34
D3A
KK67
D3A
JJ78
D3A
A2
D3N
PIN_NCBK

FILE NAME: **007121.pdsprj**

DESIGN TITLE: **Konami 007121**

BLANKING

BY: Sean Gonsalves REV: 0

DATE: **03/04/2021**

PAGE: 7 of 52

TIME: 00:06:09

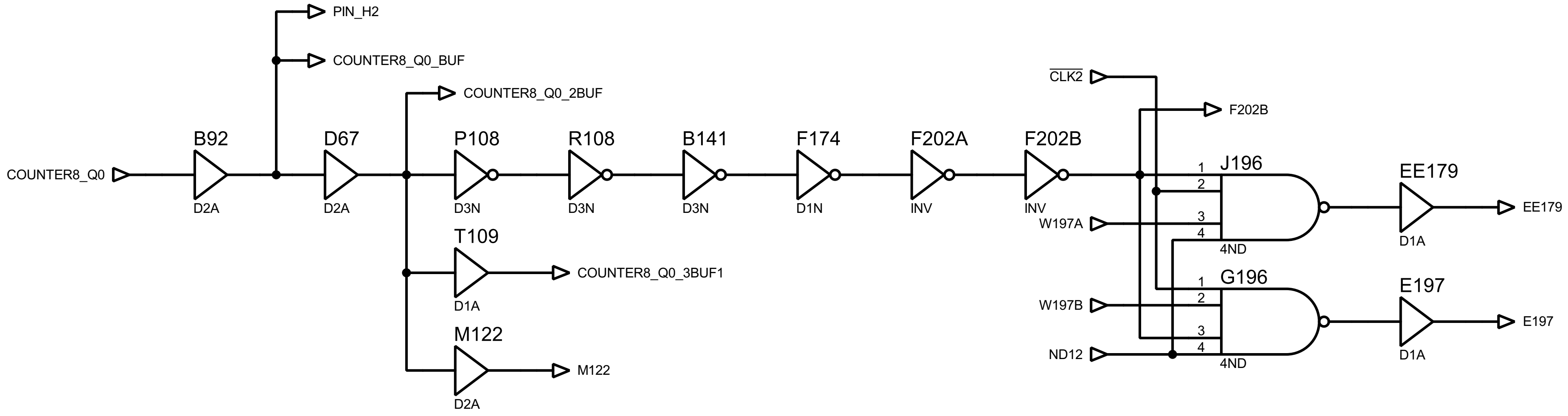
PIN_H2
COUNTER8_Q0_BUF
COUNTER8_Q0_2BUF
COUNTER8_Q0
B92
D2A
D67
D2A
P108
D3N
R108
D3N
B141
D3N
F174
D1N
F202A
INV
F202B
INV
T109
D1A
COUNTER8_Q0_3BUF1
M122
D2A
M122
$\overline{\text{CLK2}}$
F202B
J196
1
2
3
4
W197A
4ND
G196
1
2
3
4
W197B
ND12
4ND
EE179
D1A
EE179
E197
D1A
E197

T109 or M112 must be an inverter ?

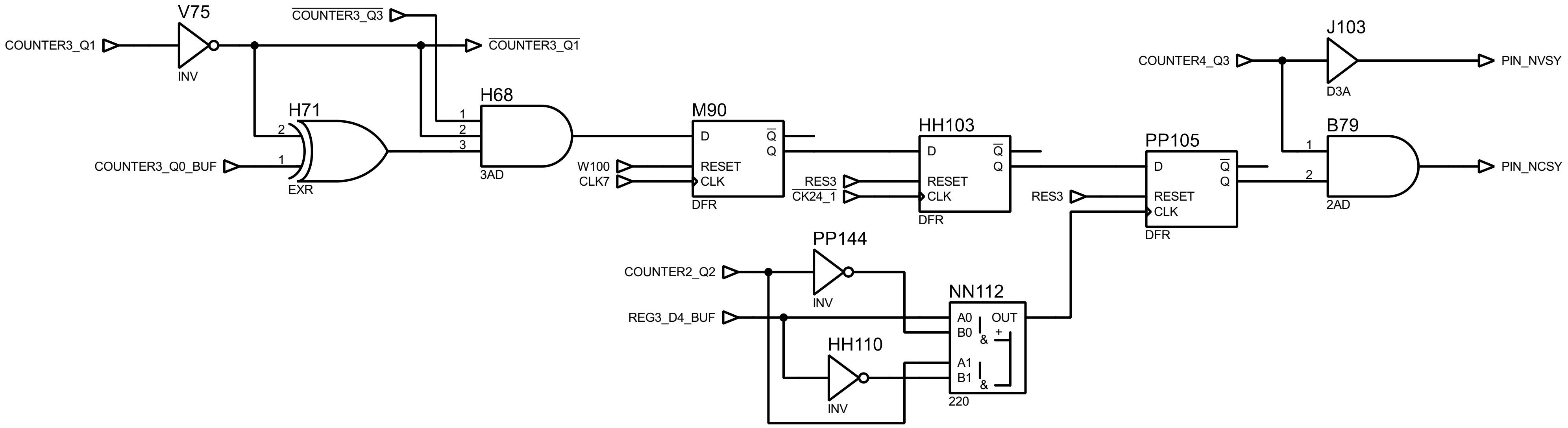
V75
INV
COUNTER3_Q1
$\overline{\text{COUNTER3\_Q3}}$
$\overline{\text{COUNTER3\_Q1}}$
H71
2
1
EXR
COUNTER3_Q0_BUF
H68
1
2
3
3AD
M90
D
$\overline{\text{Q}}$
Q
RESET
CLK
DFR
W100
CLK7
HH103
D
$\overline{\text{Q}}$
Q
RESET
CLK
DFR
RES3
$\overline{\text{CK24\_1}}$
PP105
D
$\overline{\text{Q}}$
Q
RESET
CLK
DFR
RES3
J103
COUNTER4_Q3
D3A
PIN_NVSY
B79
1
2
2AD
PIN_NCSY
PP144
INV
COUNTER2_Q2
REG3_D4_BUF
HH110
INV
NN112
A0
B0
A1
B1
OUT
&
+
&
220

Polarity select

FILE NAME: **007121.pdsprj**
DESIGN TITLE: **Konami 007121**
VIDEO SYNC
BY: Sean Gonsalves
REV: 0
DATE:
03/04/2021
PAGE:
8 of 52

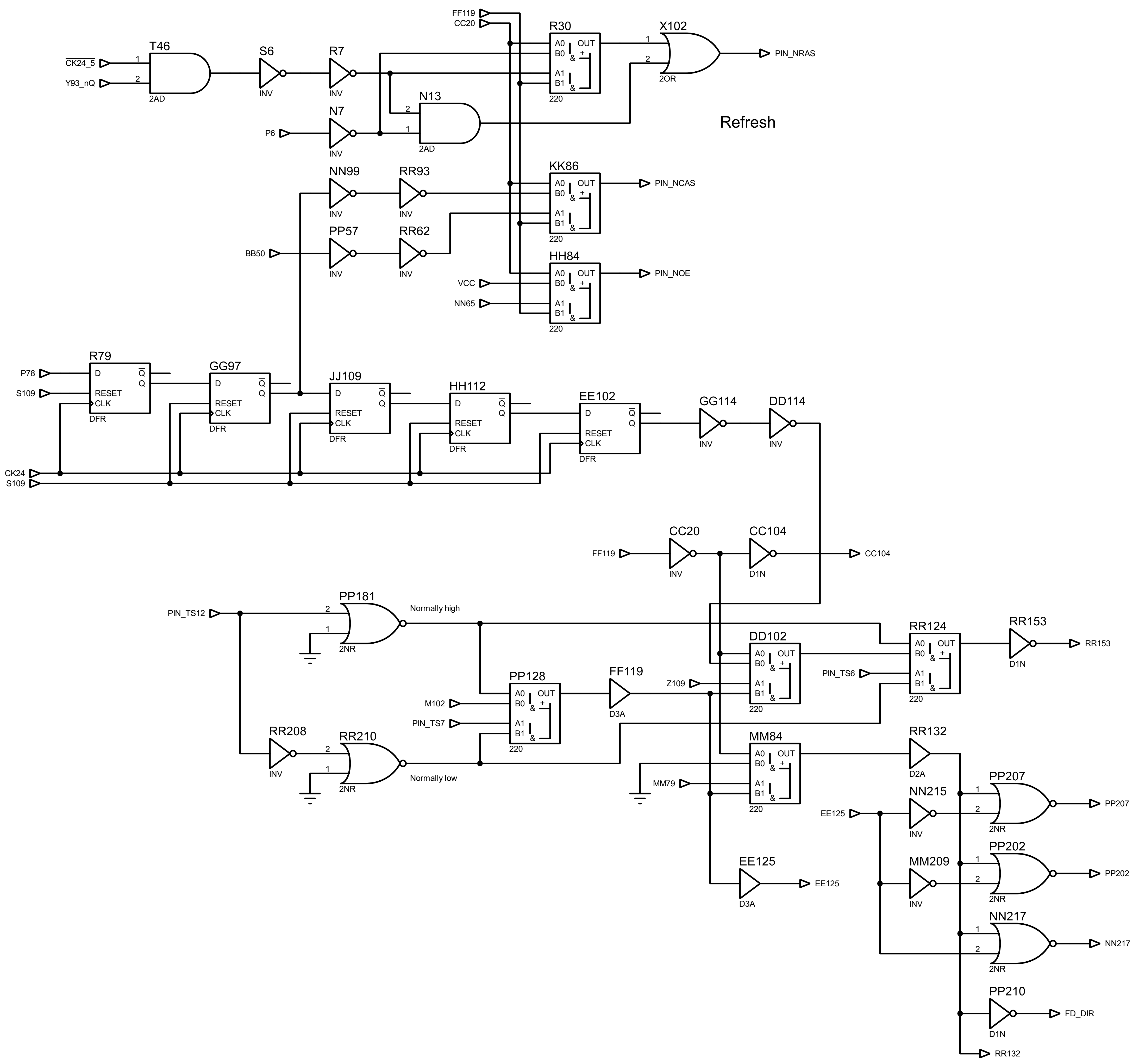
Refresh
CK24_5
Y93_nQ
T46
2AD
S6
INV
R7
N7
P6
N13
R30
A0
B0
A1
B1
OUT
220
FF119
CC20
X102
2OR
PIN_NRAS
NN99
RR93
PP57
RR62
BB50
KK86
PIN_NCAS
HH84
VCC
NN65
PIN_NOE
P78
S109
R79
GG97
JJ109
HH112
EE102
D
Q
RESET
CLK
DFR
CK24
GG114
DD114
CC104
D1N
PIN_TS12
PP181
2NR
Normally high
RR208
RR210
Normally low
PP128
M102
PIN_TS7
FF119
D3A
Z109
DD102
RR124
PIN_TS6
RR153
MM84
MM79
RR132
D2A
EE125
NN215
MM209
PP207
PP202
NN217
PP210
FD_DIR
EE125

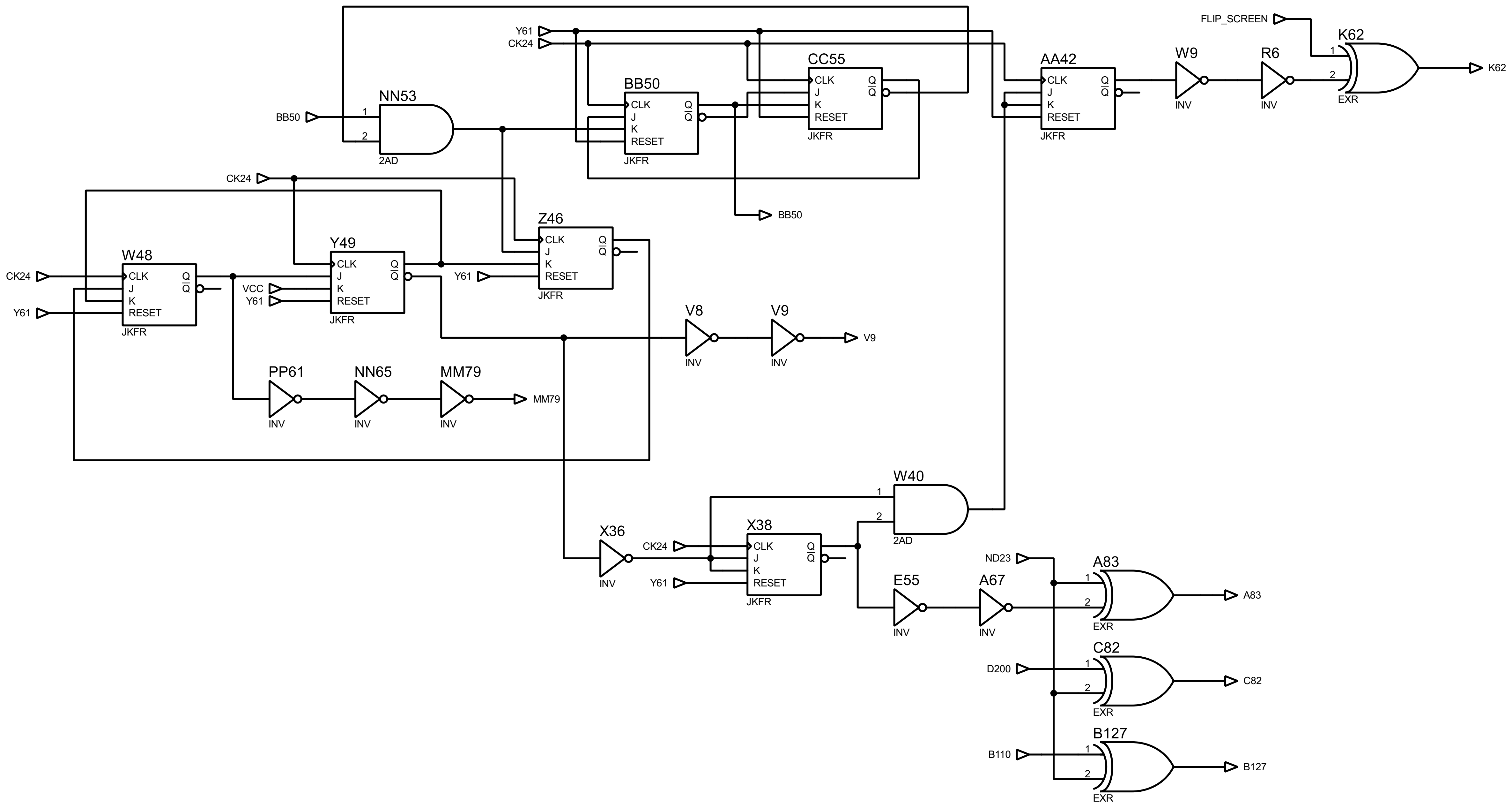
NN53
BB50
Y61
CK24
BB50
JKFR
CC55
AA42
FLIP_SCREEN
W9
R6
K62
EXR
W48
Y49
Z46
VCC
Y61
PP61
NN65
MM79
V8
V9
W40
X36
X38
E55
A67
ND23
A83
D200
C82
B110
B127

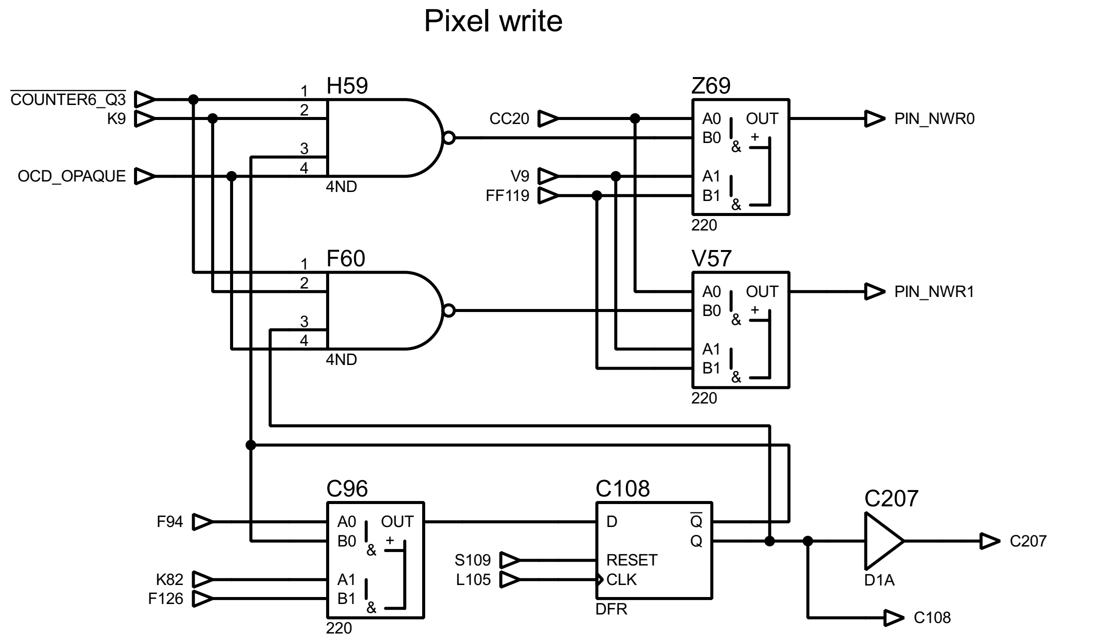
Pixel write
COUNTER6_Q3
K9
OCD_OPAQUE
H59
4ND
F60
CC20
V9
FF119
Z69
PIN_NWR0
V57
PIN_NWR1
F94
K82
F126
C96
S109
L105
C108
C207
D1A
C207
C108

FILE NAME: **007121.pdsprj**

DESIGN TITLE: **Konami 007121**
DRAM CONTROL

BY: Sean Gonsalves
REV: 0

DATE:
03/04/2021

PAGE:
9 of 52

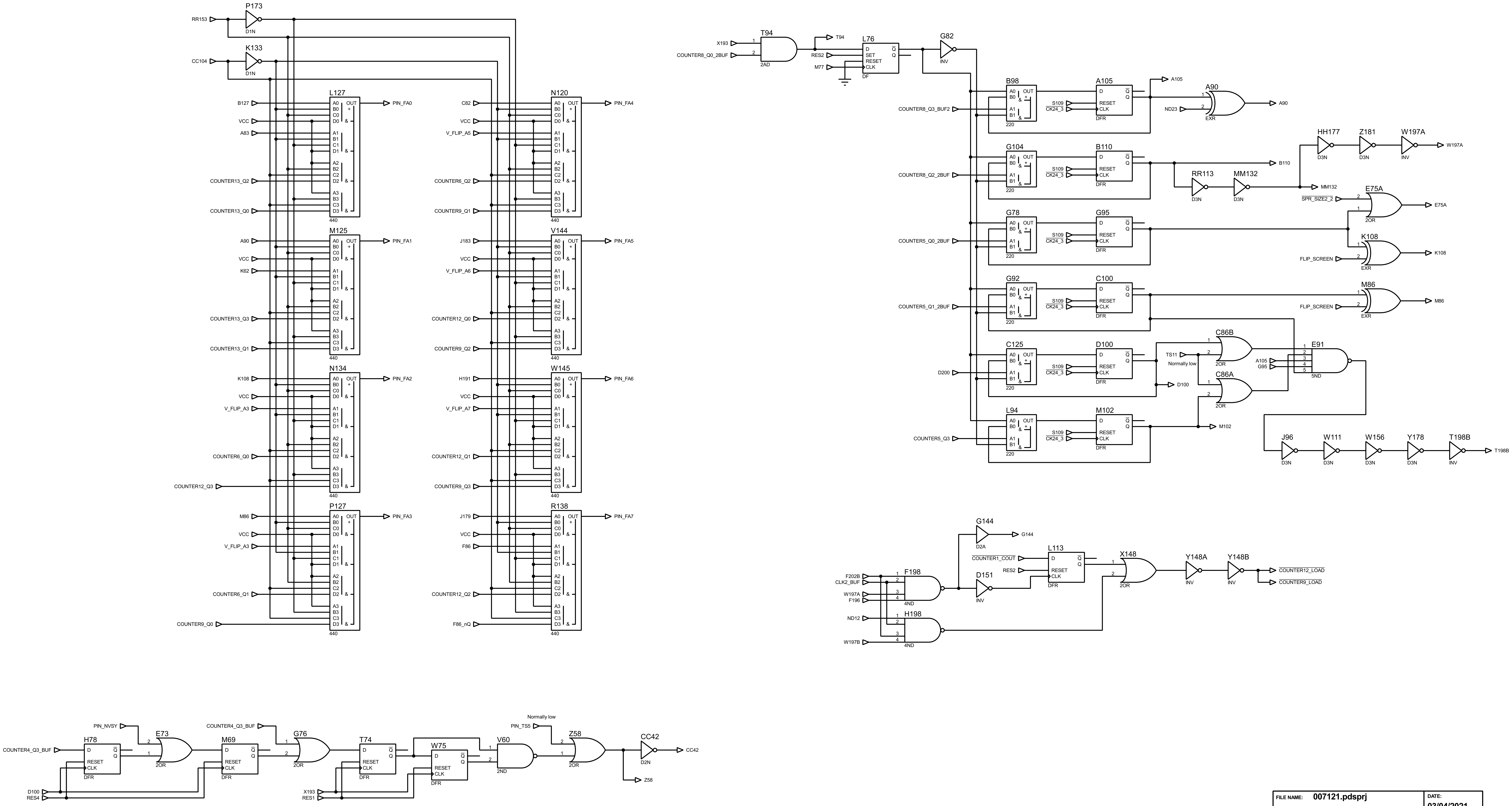
P173
K133
RR153
CC104
D1N
L127
N120
M125
V144
N134
W145
P127
R138
440
A0 B0 C0 D0
A1 B1 C1 D1
A2 B2 C2 D2
A3 B3 C3 D3
OUT
PIN_FA0
PIN_FA1
PIN_FA2
PIN_FA3
PIN_FA4
PIN_FA5
PIN_FA6
PIN_FA7
B127
VCC
A83
COUNTER13_Q2
COUNTER13_Q0
A90
K62
COUNTER13_Q3
COUNTER13_Q1
K108
V_FLIP_A3
COUNTER6_Q0
COUNTER12_Q3
M86
COUNTER6_Q1
COUNTER9_Q0
C82
V_FLIP_A5
COUNTER6_Q2
COUNTER9_Q1
J183
V_FLIP_A6
COUNTER12_Q0
COUNTER9_Q2
H191
V_FLIP_A7
COUNTER12_Q1
COUNTER9_Q3
J179
F86
COUNTER12_Q2
F86_nQ
T94
X193
COUNTER8_Q0_2BUF
2AD
L76
RES2
M77
D SET RESET CLK
DF
G82
INV
B98
A105
G104
B110
G78
G95
G92
C100
C125
D100
L94
M102
220
DFR
S109
CK24_3
COUNTER8_Q3_BUF2
COUNTER8_Q2_2BUF
COUNTER5_Q0_2BUF
COUNTER5_Q1_2BUF
D200
COUNTER5_Q3
A90
ND23
EXR
HH177
Z181
W197A
D3N
RR113
MM132
E75A
SPR_SIZE2_2
2OR
K108
FLIP_SCREEN
M86
C86B
TS11
Normally low
C86A
E91
5ND
G95
J96
W111
W156
Y178
T198B
G144
D2A
L113
COUNTER1_COUT
F198
F202B
CLK2_BUF
W197A
F196
4ND
D151
X148
Y148A
Y148B
COUNTER12_LOAD
COUNTER9_LOAD
H198
ND12
W197B
H78
COUNTER4_Q3_BUF
PIN_NVSY
E73
M69
G76
T74
W75
V60
2ND
PIN_TS5
Z58
CC42
D2N
CC42
Z58
D100
RES4
X193
RES1

FILE NAME: **007121.pdsprj**

DESIGN TITLE: **Konami 007121**

DRAM ADDRESS

BY: Sean Gonsalves REV: 0

DATE: 03/04/2021

PAGE: 10 of 52

TIME: 00:06:09

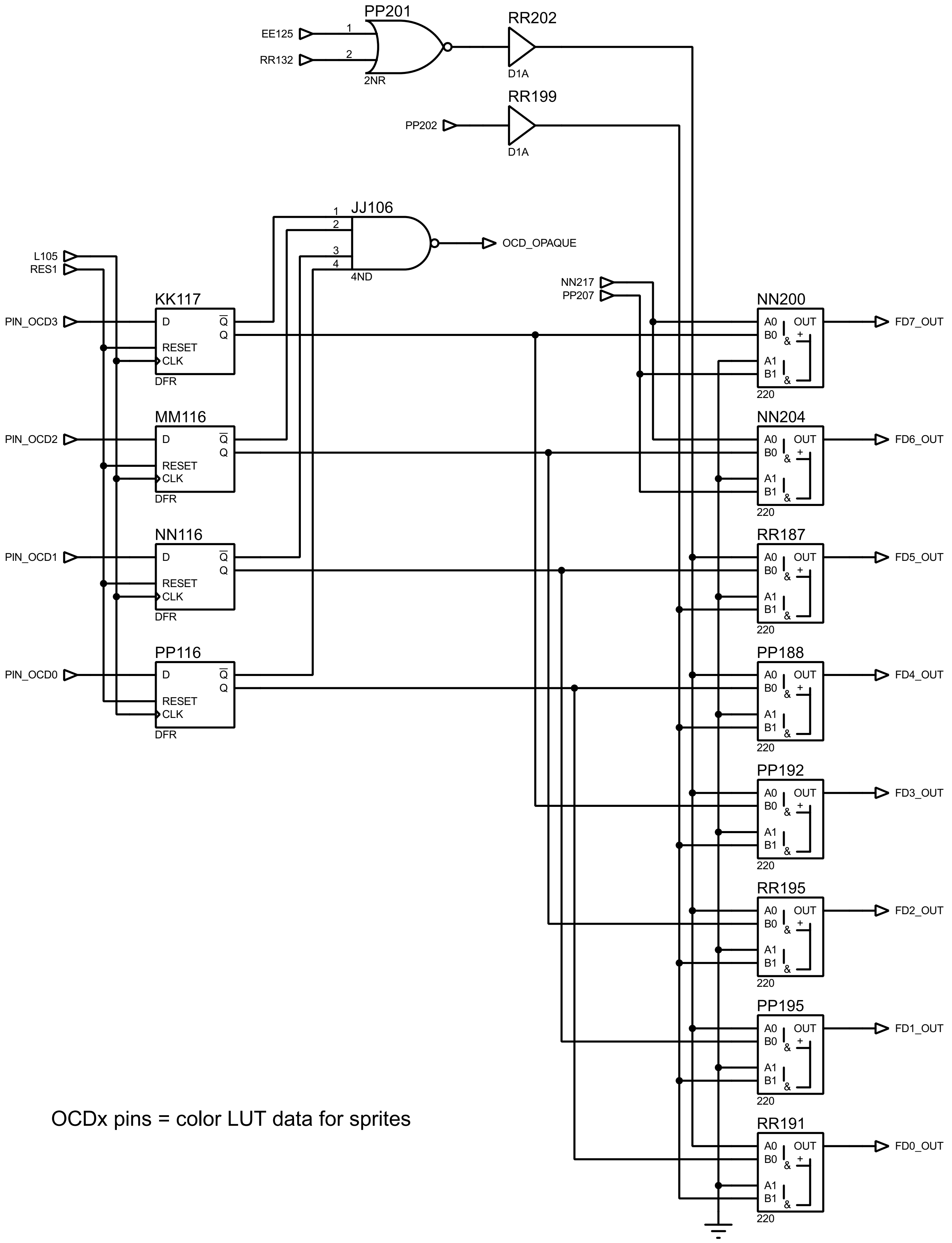

PP201
EE125
RR132
1
2
2NR
RR202
D1A
RR199
PP202
D1A
JJ106
1
2
3
4
4ND
OCD_OPAQUE
L105
RES1
NN217
PP207
KK117
PIN_OCD3
D
Q̄
Q
RESET
CLK
DFR
MM116
PIN_OCD2
D
Q̄
Q
RESET
CLK
DFR
NN116
PIN_OCD1
D
Q̄
Q
RESET
CLK
DFR
PP116
PIN_OCD0
D
Q̄
Q
RESET
CLK
DFR
NN200
A0
B0
A1
B1
OUT
&
+
&
220
FD7_OUT
NN204
220
FD6_OUT
RR187
220
FD5_OUT
PP188
220
FD4_OUT
PP192
220
FD3_OUT
RR195
220
FD2_OUT
PP195
220
FD1_OUT
RR191
220
FD0_OUT

OCDx pins = color LUT data for sprites

FILE NAME: 007121.pdsprj

DESIGN TITLE: Konami 007121

DRAM DATA

BY: Sean Gonsalves **REV:** 0

DATE:
03/04/2021

PAGE:
11 of 52

TIME: 00:06:09

```
MAME says (video/k007121.cpp):

R0~R17 are the 18 GFX ROMs address lines:
110000000000000000
10FEDCBA9876543210

Tile code:
DCBA9876543210
|||||'- Tilemap[7]
|''''-- Reg 4[3:0] or Tilemap[6:3]
'------ Reg 3[0]

TTTTTCCC

Color codes output to PROMs:
CCCCPPPP
||||''''- Pixel code
''''----- Color code for tile/sprite
```

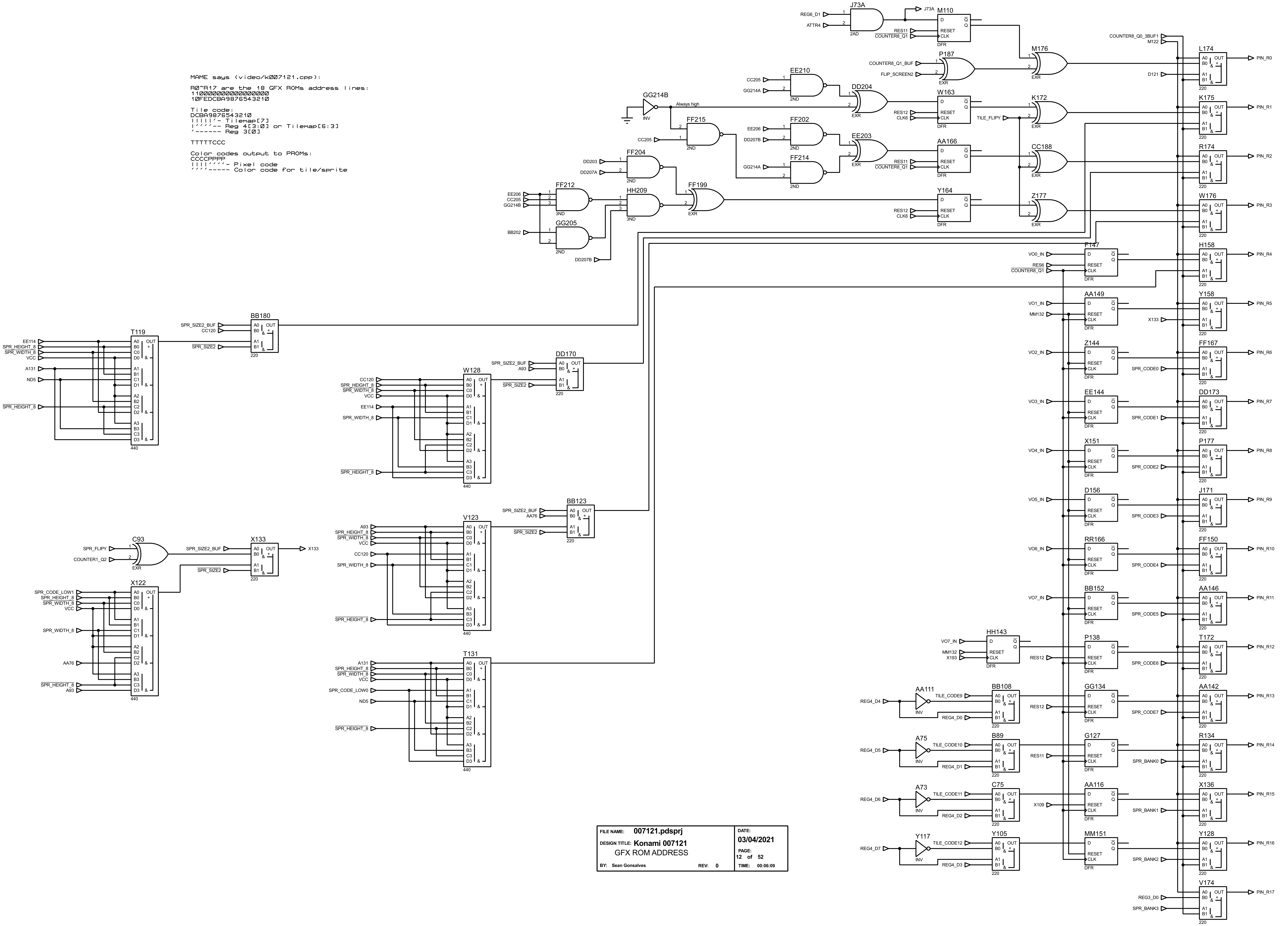
J73A
REG6_D1
ATTR4
2AD
M110
D
Q
RESET
CLK
RES11
COUNTER8_Q1
DFR
P187
COUNTER8_Q1_BUF
FLIP_SCREEN2
EXR
M176
EE210
CC205
GG214A
2ND
DD204
GG214B
INV
Always high
W163
RES12
CLK6
K172
TILE_FLIPY
FF215
FF202
EE206
DD207B
EE203
AA166
CC188
FF214
FF204
DD203
DD207A
FF212
3ND
HH209
FF199
Y164
Z177
GG205
BB202
COUNTER8_Q0_3BUF1
M122
D121
L174
K175
R174
W176
H158
Y158
FF167
DD173
P177
J171
FF150
AA146
T172
AA142
R134
X136
Y128
V174
A0
B0
A1
B1
OUT
+
&
220
PIN_R0
PIN_R1
PIN_R2
PIN_R3
PIN_R4
PIN_R5
PIN_R6
PIN_R7
PIN_R8
PIN_R9
PIN_R10
PIN_R11
PIN_R12
PIN_R13
PIN_R14
PIN_R15
PIN_R16
PIN_R17
F147
VO0_IN
RES6
AA149
VO1_IN
MM132
X133
Z144
VO2_IN
SPR_CODE0
EE144
VO3_IN
SPR_CODE1
X151
VO4_IN
SPR_CODE2
D156
VO5_IN
SPR_CODE3
RR166
VO6_IN
SPR_CODE4
BB152
VO7_IN
SPR_CODE5
HH143
X193
P138
SPR_CODE6
AA111
REG4_D4
BB108
TILE_CODE9
REG4_D0
GG134
SPR_CODE7
A75
REG4_D5
B89
TILE_CODE10
REG4_D1
G127
SPR_BANK0
A73
REG4_D6
C75
TILE_CODE11
REG4_D2
AA116
X109
SPR_BANK1
Y117
REG4_D7
Y105
TILE_CODE12
REG4_D3
MM151
SPR_BANK2
REG3_D0
SPR_BANK3
BB180
SPR_SIZE2_BUF
CC120
SPR_SIZE2
T119
EE114
SPR_HEIGHT_8
SPR_WIDTH_8
VCC
A131
ND5
C0
D0
C1
D1
A2
B2
C2
D2
A3
B3
C3
D3
440
DD170
A93
W128
BB123
AA76
V123
T131
SPR_CODE_LOW0
C93
SPR_FLIPY
COUNTER1_Q2
X133
X122
SPR_CODE_LOW1

FILE NAME: **007121.pdsprj**
DESIGN TITLE: **Konami 007121**
GFX ROM ADDRESS
BY: Sean Gonsalves REV: 0
DATE:
03/04/2021
PAGE:
12 of 52
TIME: 00:06:09

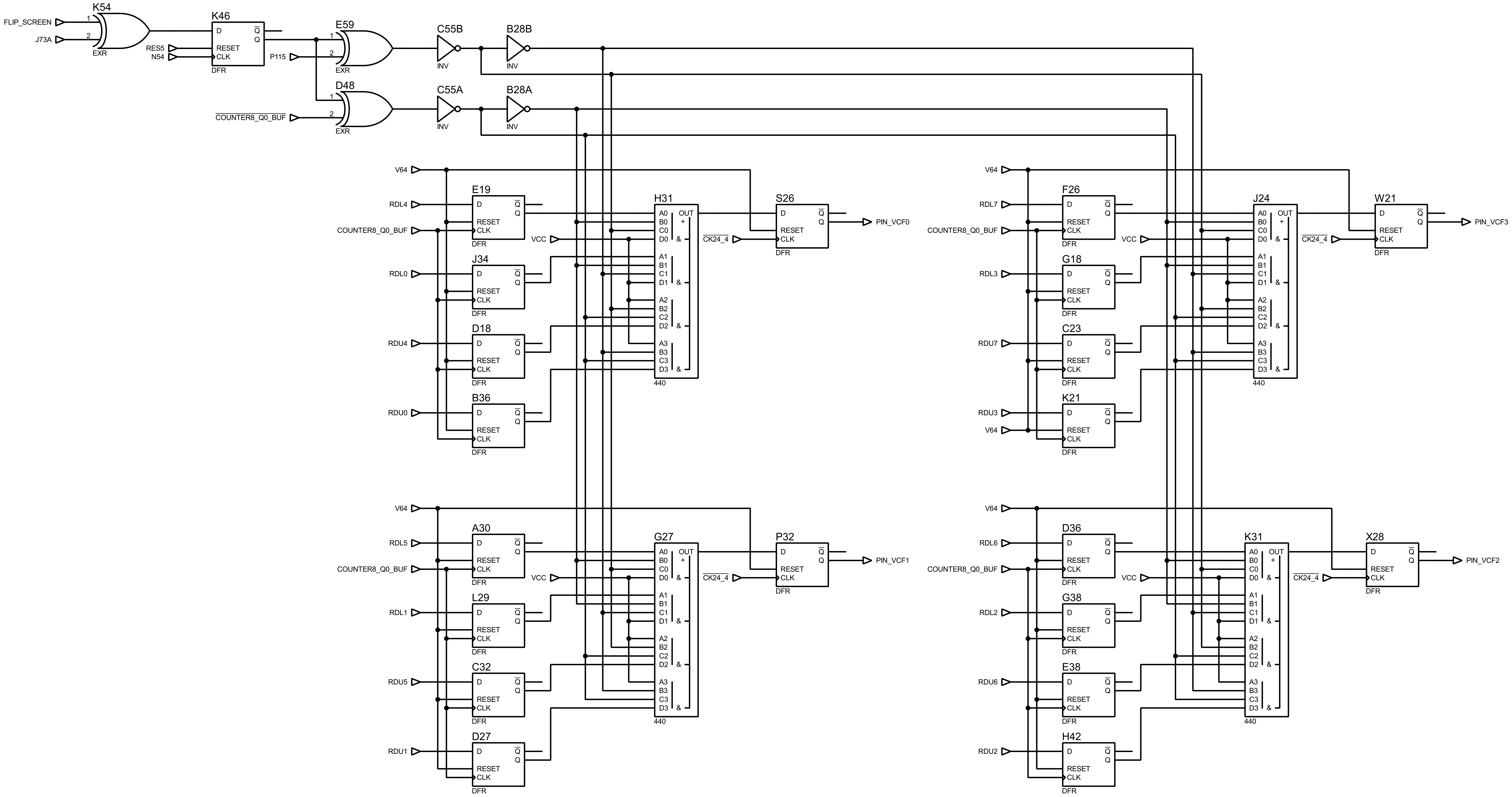
FLIP_SCREEN
J73A
K54
EXR
K46
D
Q
RESET
CLK
DFR
RES5
N54
P115
E59
D48
COUNTER8_Q0_BUF
C55B
C55A
B28B
B28A
INV
V64
E19
RDL4
J34
RDL0
D18
RDU4
B36
RDU0
VCC
H31
A0 B0 C0 D0
A1 B1 C1 D1
A2 B2 C2 D2
A3 B3 C3 D3
OUT
+
&
440
S26
CK24_4
PIN_VCF0
A30
RDL5
L29
RDL1
C32
RDU5
D27
RDU1
G27
P32
PIN_VCF1
F26
RDL7
G18
RDL3
C23
RDU7
K21
RDU3
J24
W21
PIN_VCF3
D36
RDL6
G38
RDL2
E38
RDU6
H42
RDU2
K31
X28
PIN_VCF2

FILE NAME: **007121.pdsprj**

DESIGN TITLE: **Konami 007121**

GFX DATA INPUT

BY: Sean Gonsalves

REV: 0

DATE:

03/04/2021

PAGE:

13 of 52

TIME: 00:06:09

VCBx VCFx pins = color LUT address for tiles

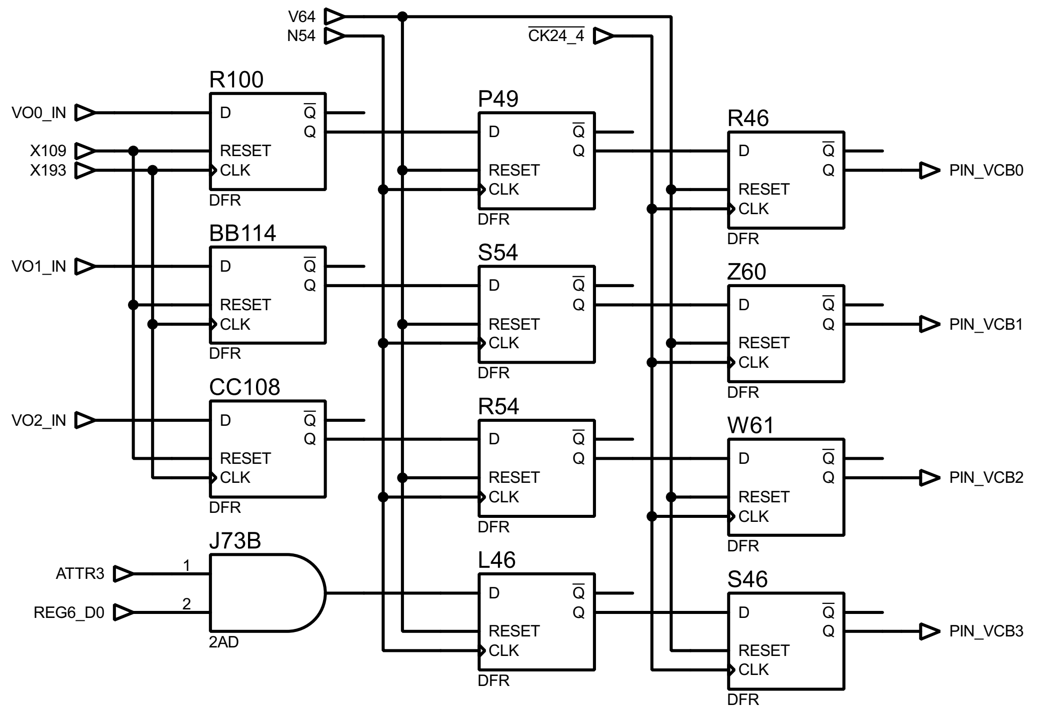
V64
N54
CK24_4
R100
P49
R46
BB114
S54
Z60
CC108
R54
W61
J73B
L46
S46
VO0_IN
X109
X193
VO1_IN
VO2_IN
ATTR3
REG6_D0
2AD
DFR
D
RESET
CLK
Q
PIN_VCB0
PIN_VCB1
PIN_VCB2
PIN_VCB3

VCDx pins = color LUT data for tiles

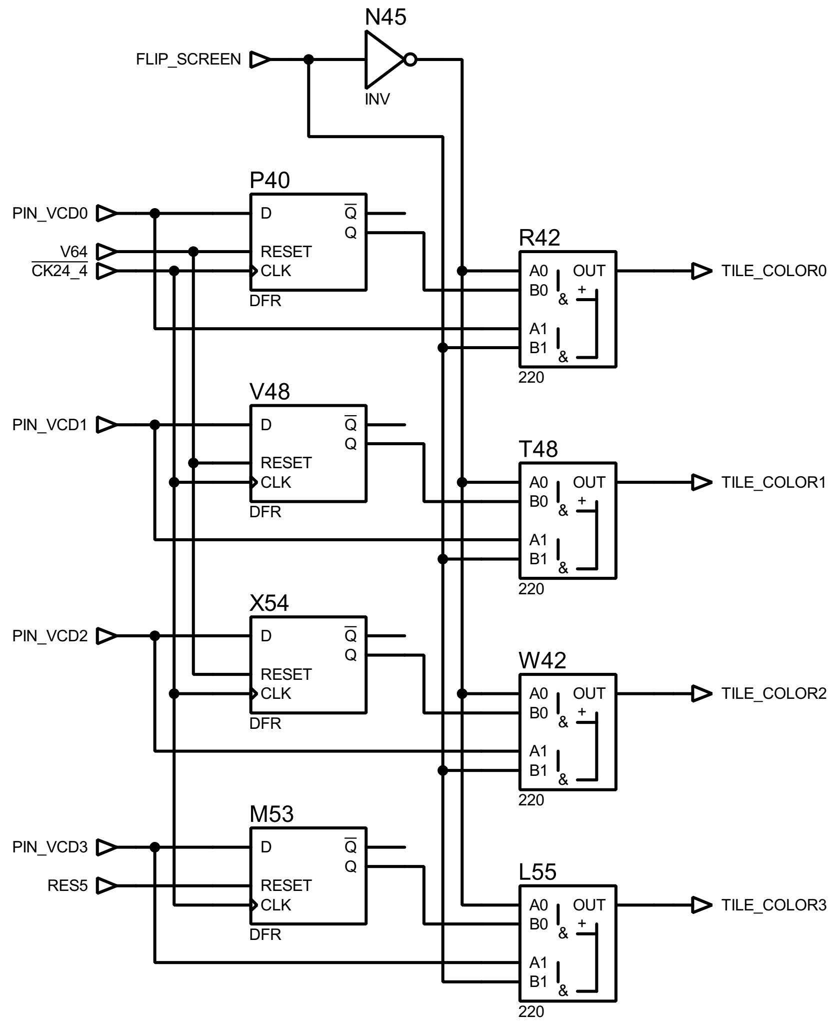
N45
INV
FLIP_SCREEN
P40
V48
X54
M53
R42
T48
W42
L55
PIN_VCD0
PIN_VCD1
PIN_VCD2
PIN_VCD3
V64
CK24_4
RES5
A0
B0
A1
B1
OUT
220
TILE_COLOR0
TILE_COLOR1
TILE_COLOR2
TILE_COLOR3

OCBx OCFx pins = color LUT address for sprites

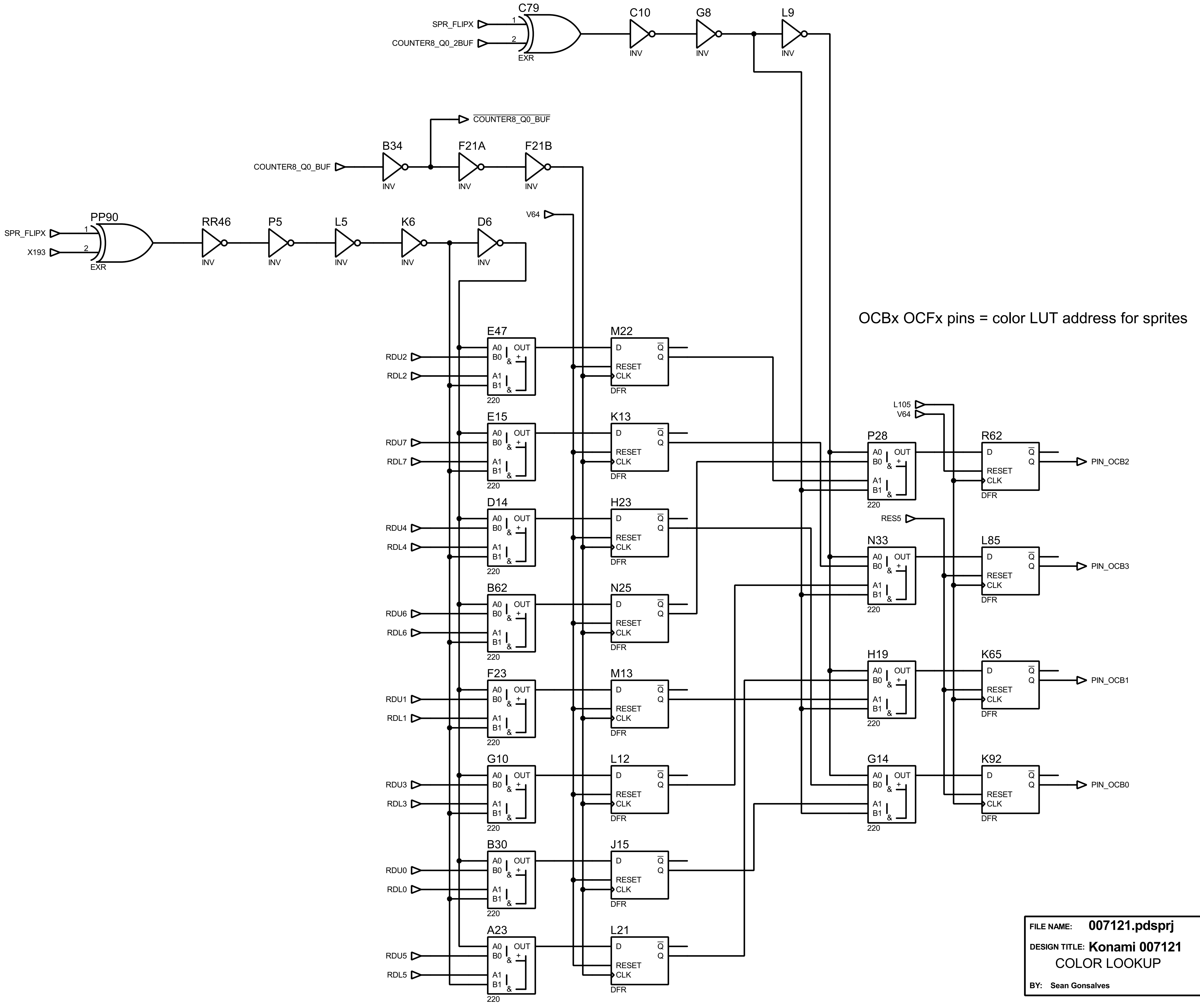
C79
C10
G8
L9
SPR_FLIPX
COUNTER8_Q0_2BUF
EXR
INV
COUNTER8_Q0_BUF
B34
F21A
F21B
V64
PP90
RR46
P5
L5
K6
D6
X193
E47
E15
D14
B62
F23
G10
B30
A23
M22
K13
H23
N25
M13
L12
J15
L21
RDU2
RDL2
RDU7
RDL7
RDU4
RDL4
RDU6
RDL6
RDU1
RDL1
RDU3
RDL3
RDU0
RDL0
RDU5
RDL5
L105
P28
N33
H19
G14
R62
L85
K65
K92
RES5
PIN_OCB2
PIN_OCB3
PIN_OCB1
PIN_OCB0

FILE NAME: **007121.pdsprj**
DESIGN TITLE: **Konami 007121**
COLOR LOOKUP
BY: Sean Gonsalves
REV: 0
DATE: **03/04/2021**
PAGE: 14 of 52
TIME: 00:06:09

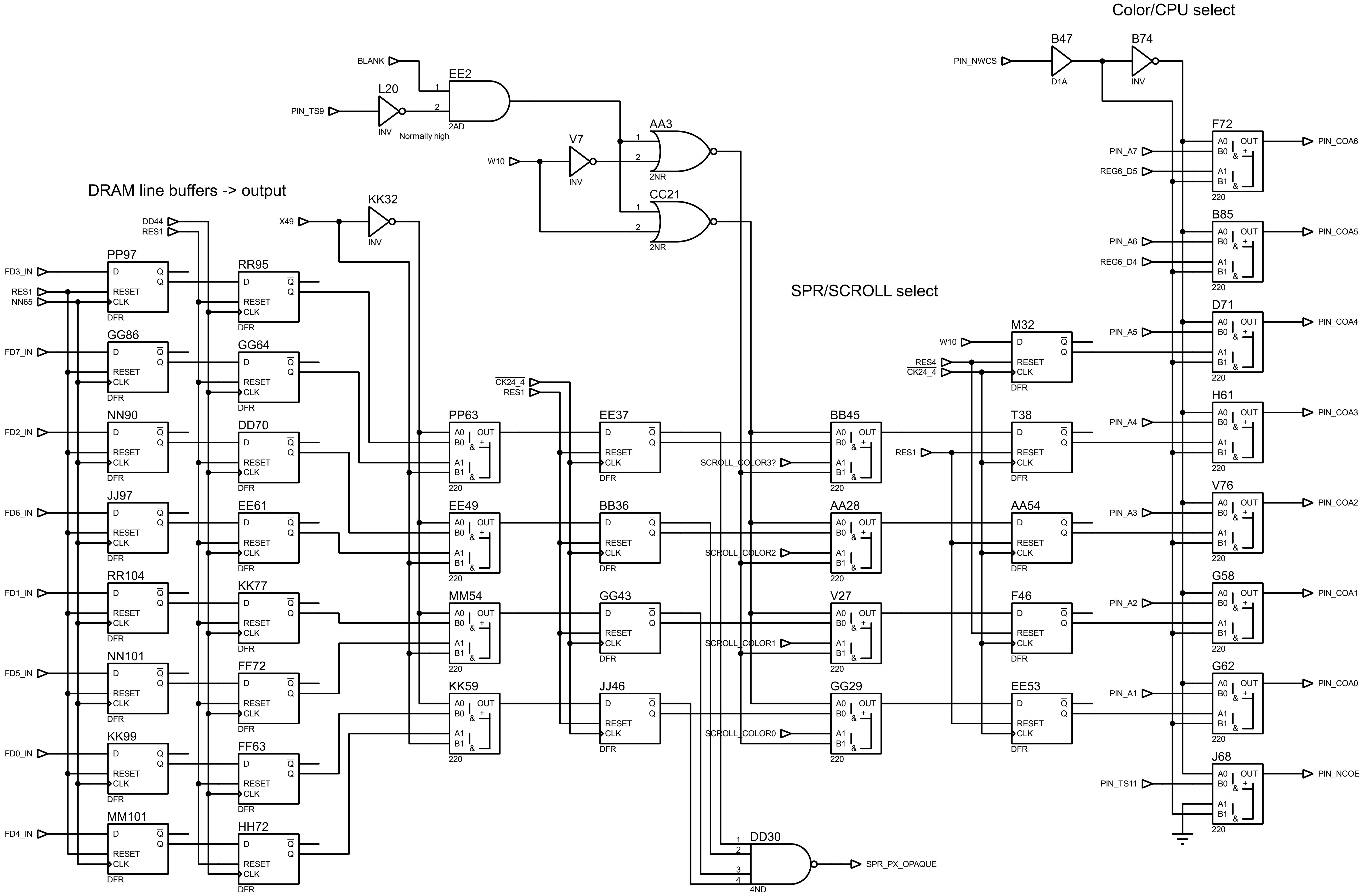
Color/CPU select
SPR/SCROLL select
DRAM line buffers -> output
Normally high
BLANK
PIN_TS9
L20
INV
EE2
2AD
W10
V7
AA3
CC21
2NR
X49
KK32
DD44
RES1
NN65
FD3_IN
FD7_IN
FD2_IN
FD6_IN
FD1_IN
FD5_IN
FD0_IN
FD4_IN
PP97
GG86
NN90
JJ97
RR104
NN101
KK99
MM101
RR95
GG64
DD70
EE61
KK77
FF72
FF63
HH72
DFR
PP63
EE49
MM54
KK59
220
CK24_4
EE37
BB36
GG43
JJ46
SCROLL_COLOR3?
SCROLL_COLOR2
SCROLL_COLOR1
SCROLL_COLOR0
BB45
AA28
V27
GG29
DD30
4ND
SPR_PX_OPAQUE
RES4
M32
T38
AA54
F46
EE53
PIN_NWCS
B47
D1A
B74
F72
B85
D71
H61
V76
G58
G62
J68
PIN_A7
REG6_D5
PIN_A6
REG6_D4
PIN_A5
PIN_A4
PIN_A3
PIN_A2
PIN_A1
PIN_TS11
PIN_COA6
PIN_COA5
PIN_COA4
PIN_COA3
PIN_COA2
PIN_COA1
PIN_COA0
PIN_NCOE
D
Q
RESET
CLK
A0
B0
A1
B1
OUT

FILE NAME: **007121.pdsprj**

DESIGN TITLE: **Konami 007121**

COLOR OUTPUT

BY: Sean Gonsalves

REV: 0

DATE: **03/04/2021**

PAGE: 15 of 52

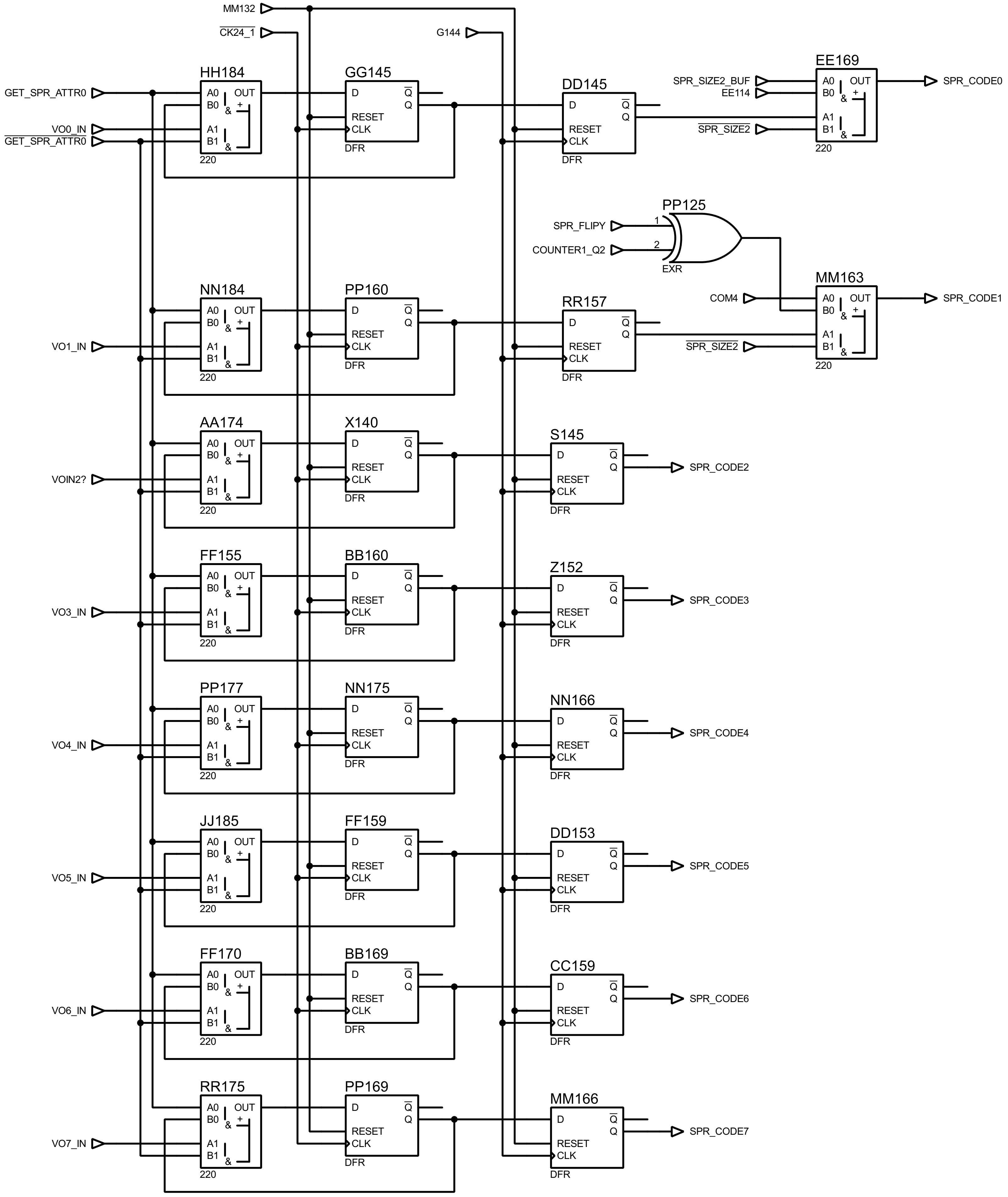
MM132
CK24_1
G144
GET_SPR_ATTR0
VO0_IN
GET_SPR_ATTR0
VO1_IN
VOIN2?
VO3_IN
VO4_IN
VO5_IN
VO6_IN
VO7_IN
HH184
NN184
AA174
FF155
PP177
JJ185
FF170
RR175
A0
B0
A1
B1
OUT
220
GG145
PP160
X140
BB160
NN175
FF159
BB169
PP169
D
Q
RESET
CLK
DFR
DD145
RR157
S145
Z152
NN166
DD153
CC159
MM166
PP125
SPR_FLIPY
COUNTER1_Q2
1
2
EXR
EE169
MM163
SPR_SIZE2_BUF
EE114
SPR_SIZE2
COM4
SPR_SIZE2
SPR_CODE0
SPR_CODE1
SPR_CODE2
SPR_CODE3
SPR_CODE4
SPR_CODE5
SPR_CODE6
SPR_CODE7

FILE NAME: **007121.pdsprj**

DESIGN TITLE: **Konami 007121**

SPR ATTR 0 (TILE #)

BY: **Sean Gonsalves** **REV:** **0**

DATE:

03/04/2021

PAGE:

16 of 52

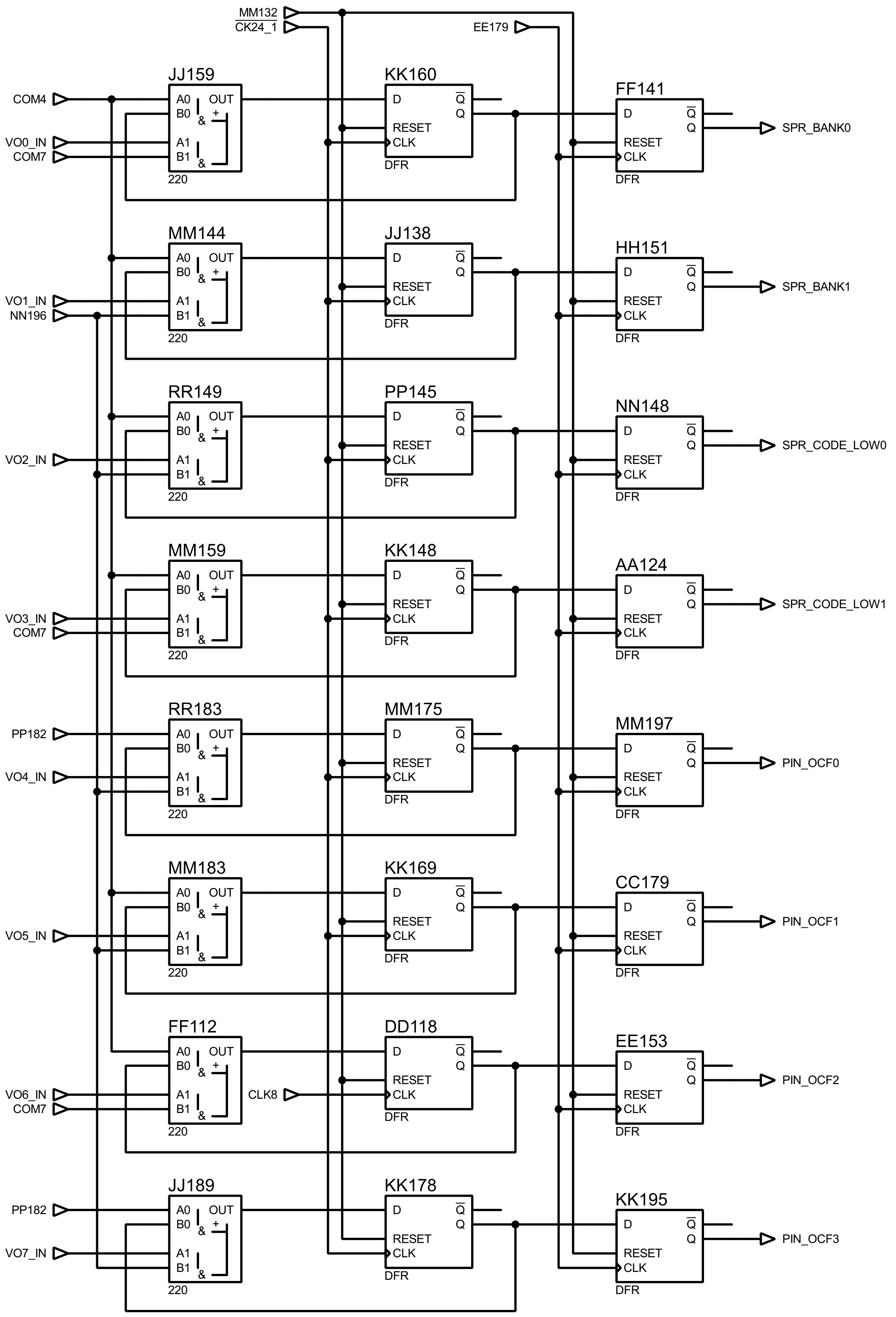
MM132
CK24_1
EE179
COM4
VO0_IN
COM7
VO1_IN
NN196
VO2_IN
VO3_IN
COM7
PP182
VO4_IN
VO5_IN
VO6_IN
COM7
CLK8
PP182
VO7_IN
JJ159
MM144
RR149
MM159
RR183
MM183
FF112
JJ189
A0
B0
A1
B1
OUT
&
+
220
KK160
JJ138
PP145
KK148
MM175
KK169
DD118
KK178
FF141
HH151
NN148
AA124
MM197
CC179
EE153
KK195
D
Q̄
Q
RESET
CLK
DFR
SPR_BANK0
SPR_BANK1
SPR_CODE_LOW0
SPR_CODE_LOW1
PIN_OCF0
PIN_OCF1
PIN_OCF2
PIN_OCF3

FILE NAME: **007121.pdsprj**		DATE: **03/04/2021**
DESIGN TITLE: **Konami 007121** SPR ATTR 1		PAGE: 17 of 52
BY: Sean Gonsalves	REV: 0	

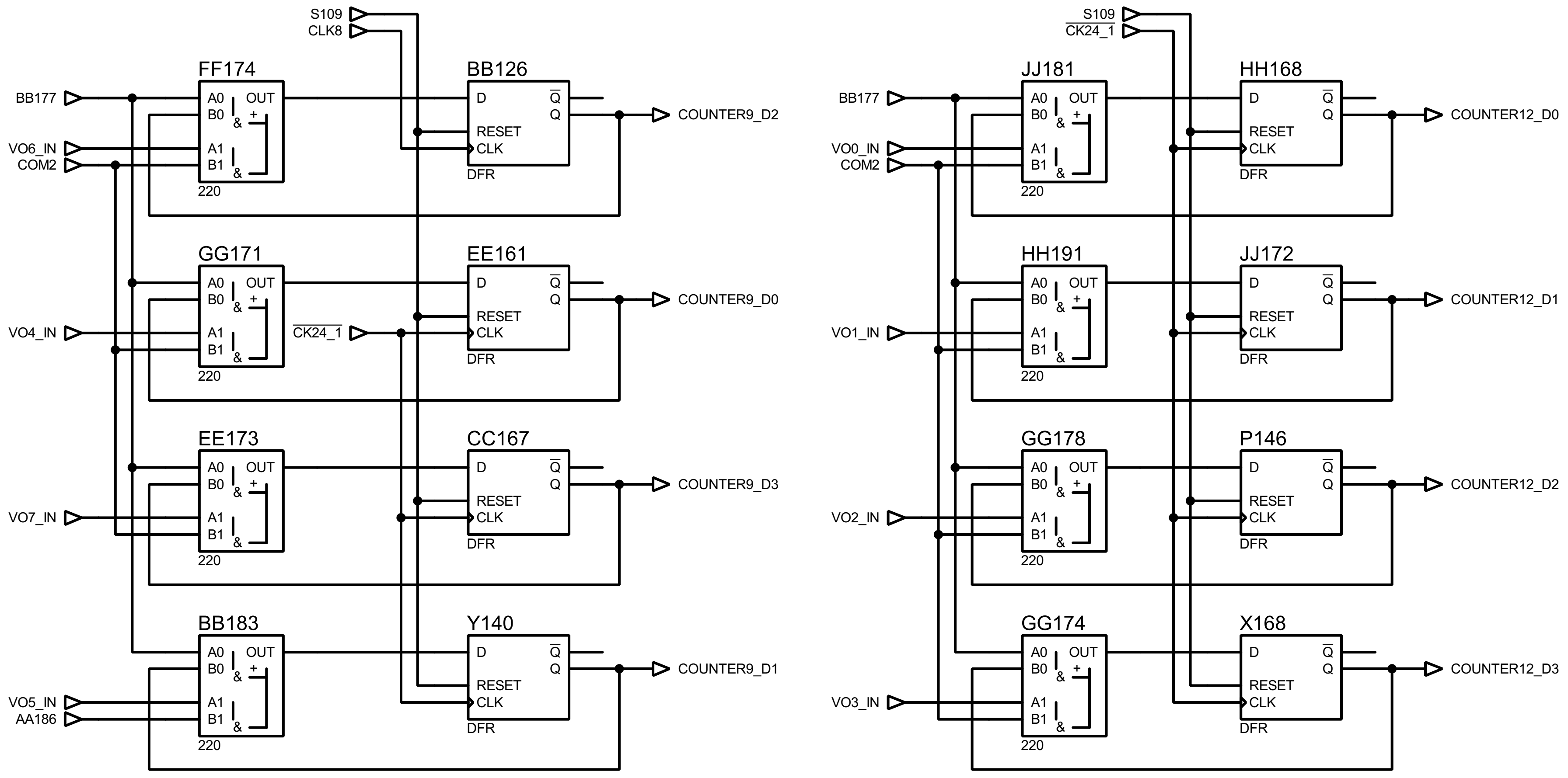
S109
CLK8
BB177
VO6_IN
COM2
FF174
A0
B0
A1
B1
OUT
220
BB126
D
RESET
CLK
Q̄
Q
DFR
COUNTER9_D2
GG171
VO4_IN
CK24_1
EE161
COUNTER9_D0
EE173
VO7_IN
CC167
COUNTER9_D3
BB183
VO5_IN
AA186
Y140
COUNTER9_D1
S109
CK24_1
BB177
VO0_IN
COM2
JJ181
HH168
COUNTER12_D0
HH191
VO1_IN
JJ172
COUNTER12_D1
GG178
VO2_IN
P146
COUNTER12_D2
GG174
VO3_IN
X168
COUNTER12_D3

FILE NAME: 007121.pdsprj

DESIGN TITLE: Konami 007121

SPR ATTR 2

BY: Sean Gonsalves **REV:** 0

DATE: 03/04/2021

PAGE: 18 of 52

TIME: 00:06:09

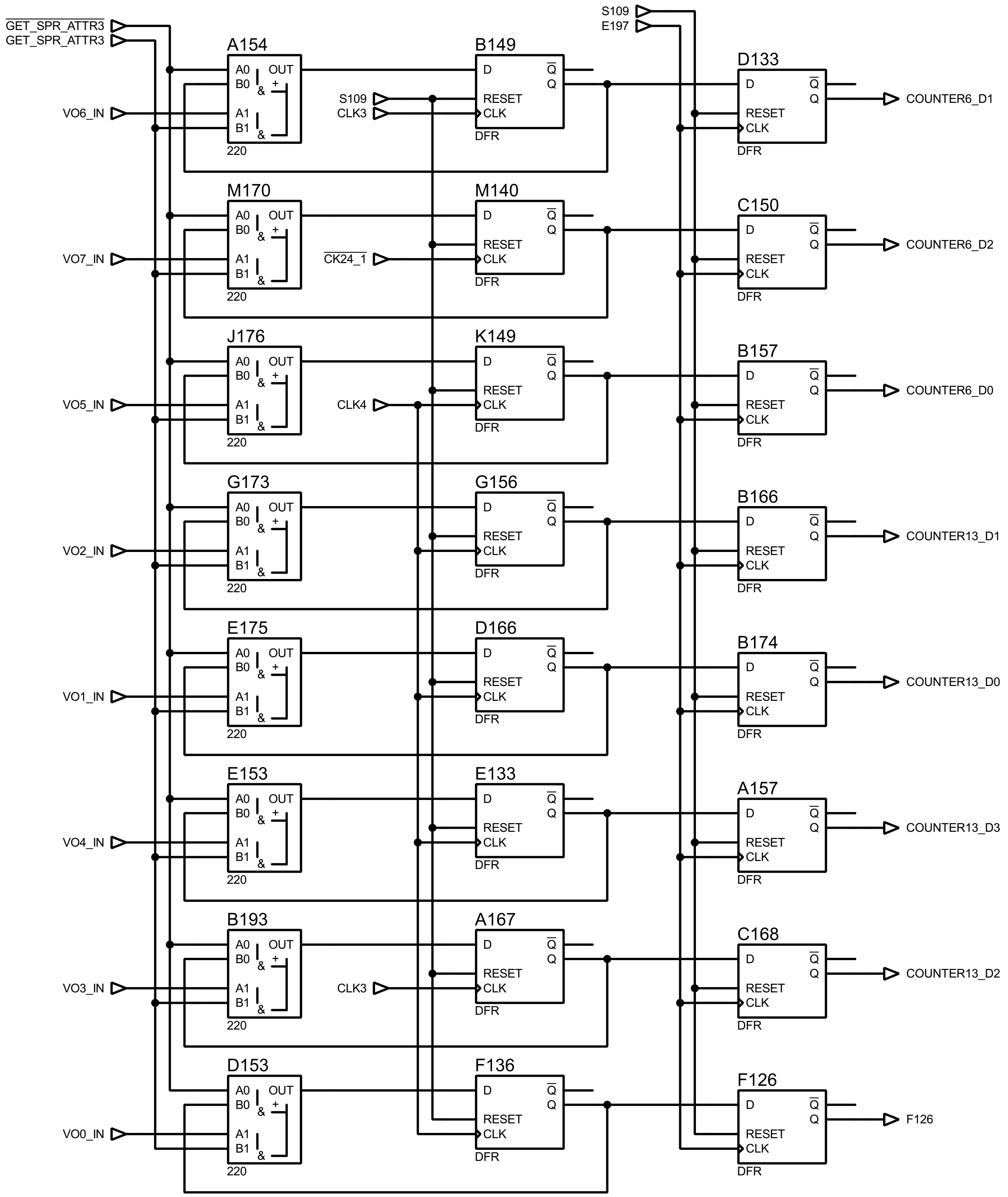
GET_SPR_ATTR3
GET_SPR_ATTR3
S109
E197
A154
B149
D133
M170
M140
C150
J176
K149
B157
G173
G156
B166
E175
D166
B174
E153
E133
A157
B193
A167
C168
D153
F136
F126
A0
B0
A1
B1
OUT
&
+
220
D
RESET
CLK
Q
Q
DFR
VO6_IN
VO7_IN
VO5_IN
VO2_IN
VO1_IN
VO4_IN
VO3_IN
VO0_IN
S109
CLK3
CK24_1
CLK4
CLK3
COUNTER6_D1
COUNTER6_D2
COUNTER6_D0
COUNTER13_D1
COUNTER13_D0
COUNTER13_D3
COUNTER13_D2
F126

FILE NAME: **007121.pdsprj**

DESIGN TITLE: **Konami 007121**
SPR ATTR 3 (X POS)

BY: **Sean Gonsalves** **REV:** **0**

DATE:
03/04/2021

PAGE:
19 of 52

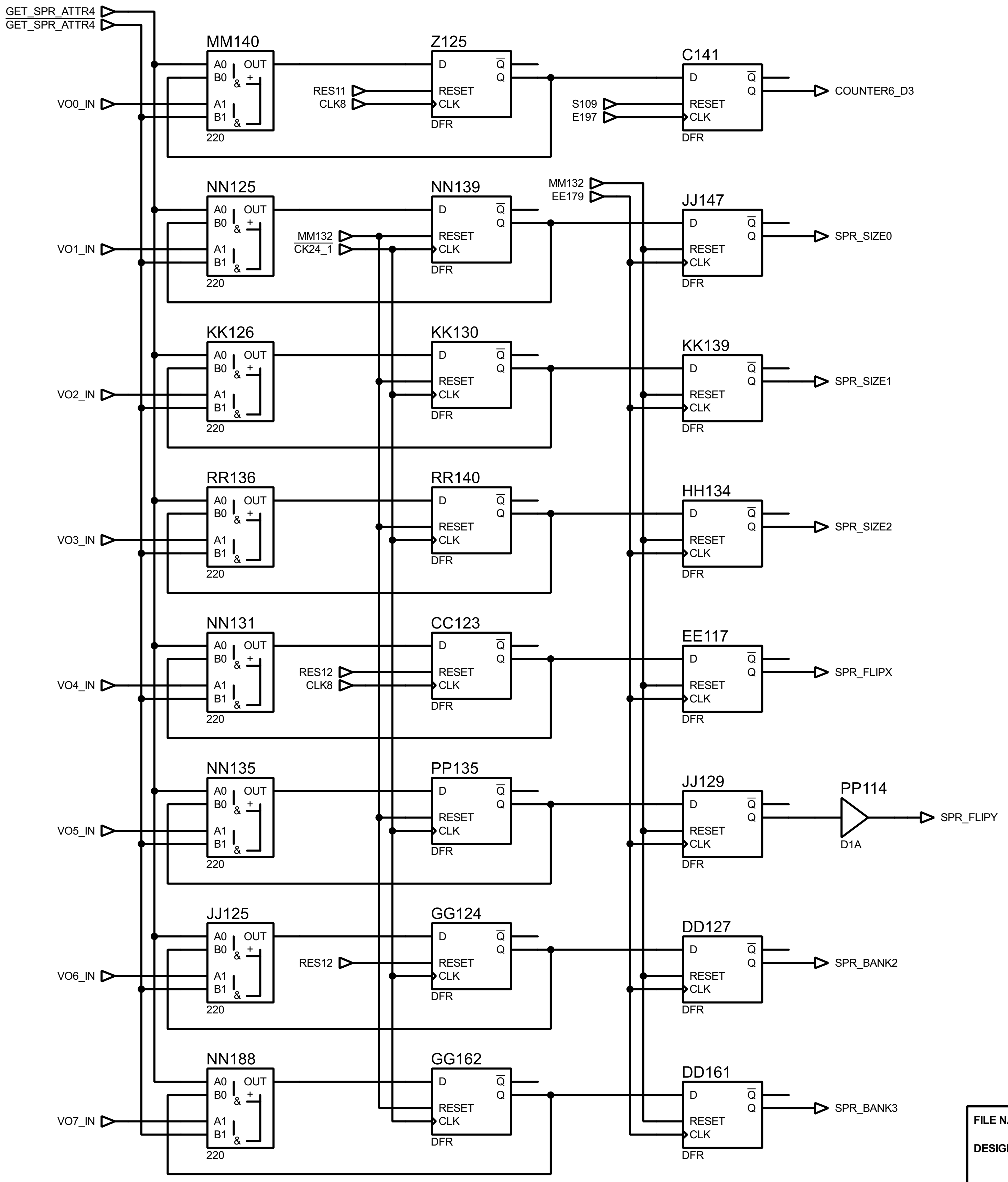
GET_SPR_ATTR4
GET_SPR_ATTR4
MM140
A0
B0
A1
B1
OUT
220
VO0_IN
Z125
D
Q
Q
RESET
CLK
DFR
RES11
CLK8
C141
S109
E197
COUNTER6_D3
NN125
VO1_IN
NN139
MM132
CK24_1
MM132
EE179
JJ147
SPR_SIZE0
KK126
VO2_IN
KK130
KK139
SPR_SIZE1
RR136
VO3_IN
RR140
HH134
SPR_SIZE2
NN131
VO4_IN
CC123
RES12
CLK8
EE117
SPR_FLIPX
NN135
VO5_IN
PP135
JJ129
PP114
D1A
SPR_FLIPY
JJ125
VO6_IN
GG124
RES12
DD127
SPR_BANK2
NN188
VO7_IN
GG162
DD161
SPR_BANK3

FILE NAME: **007121.pdsprj**

DESIGN TITLE: **Konami 007121**
SPR ATTR 4

BY: Sean Gonsalves
REV: 0

DATE:
03/04/2021

PAGE:
20 of 52

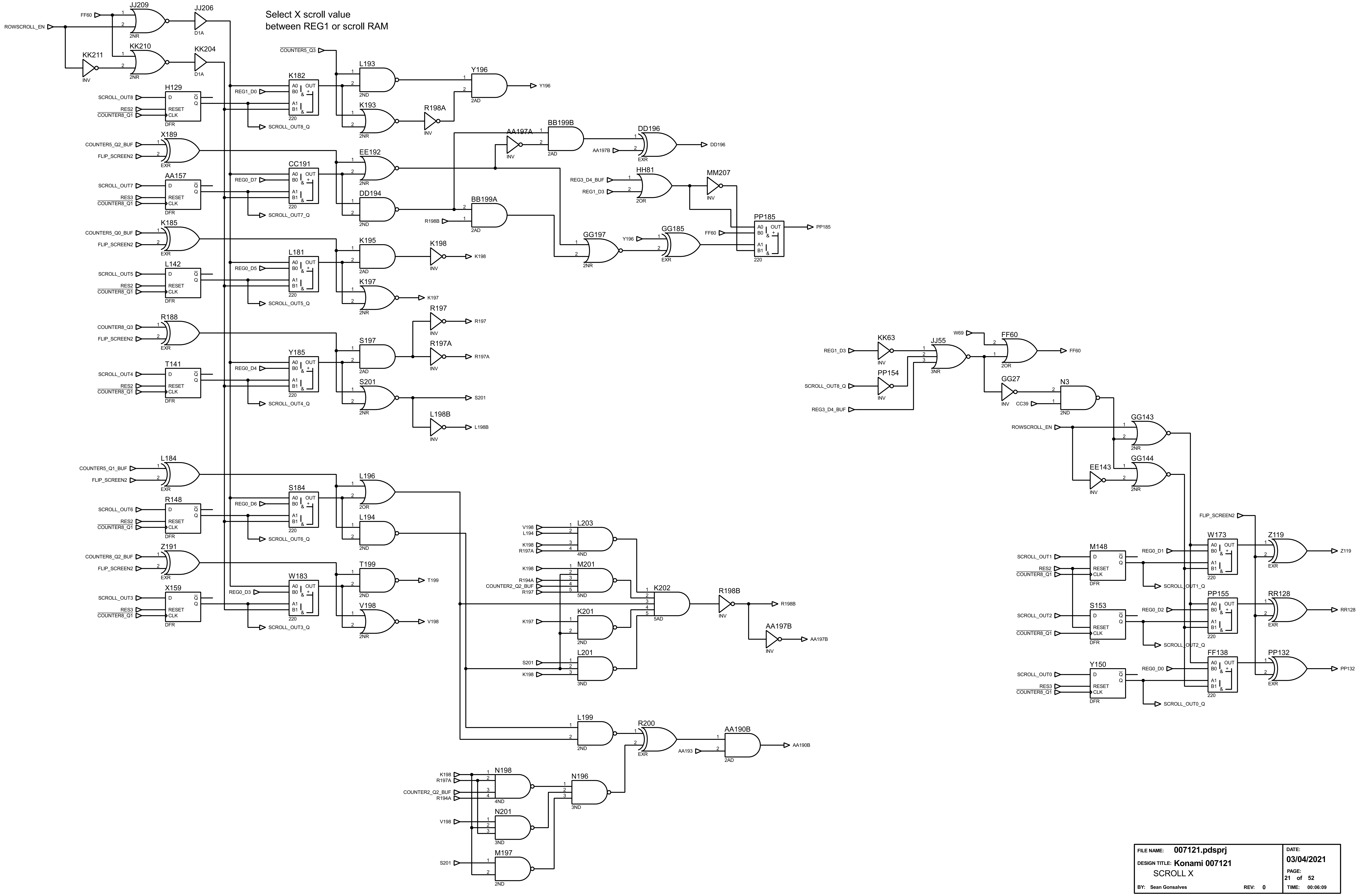

Select X scroll value
between REG1 or scroll RAM

ROWSCROLL_EN
FF60
JJ209 2NR
JJ206 D1A
KK211 INV
KK210 2NR
KK204 D1A
COUNTER5_Q3
SCROLL_OUT8
RES2
COUNTER8_Q1
H129 DFR
REG1_D0
K182 220
SCROLL_OUT8_Q
L193 2ND
K193 2NR
R198A INV
Y196 2AD
Y196
COUNTERS_Q2_BUF
FLIP_SCREEN2
X189 EXR
SCROLL_OUT7
RES3
AA157 DFR
REG0_D7
CC191 220
SCROLL_OUT7_Q
EE192 2NR
DD194 2ND
AA197A INV
BB199B 2AD
DD196 EXR
DD196
AA197B
BB199A 2AD
R198B
REG3_D4_BUF
REG1_D3
HH81 2OR
MM207 INV
GG197 2NR
GG185 EXR
PP185 220
PP185
COUNTER5_Q0_BUF
K185 EXR
SCROLL_OUT5
L142 DFR
REG0_D5
L181 220
SCROLL_OUT5_Q
K195 2AD
K198 INV
K198
K197 2NR
K197
COUNTER8_Q3
R188 EXR
SCROLL_OUT4
T141 DFR
REG0_D4
Y185 220
SCROLL_OUT4_Q
S197 2AD
R197 INV
R197
R197A INV
R197A
S201 2NR
S201
L198B INV
L198B
COUNTER5_Q1_BUF
L184 EXR
SCROLL_OUT6
R148 DFR
REG0_D6
S184 220
SCROLL_OUT6_Q
L196 2OR
L194 2ND
COUNTER8_Q2_BUF
Z191 EXR
SCROLL_OUT3
X159 DFR
REG0_D3
W183 220
SCROLL_OUT3_Q
T199 2ND
T199
V198 2NR
V198
L203 4ND
M201 5ND
R194A
COUNTER2_Q2_BUF
K201 2ND
L201 3ND
K202 5AD
R198B INV
AA197B INV
L199 2ND
R200 EXR
AA193
AA190B 2AD
AA190B
N198 4ND
N196 3ND
N201 3ND
M197 2ND
REG1_D3
KK63 INV
SCROLL_OUT8_Q
PP154 INV
REG3_D4_BUF
JJ55 3NR
W69
FF60 2OR
FF60
GG27 INV
CC39
N3 2ND
ROWSCROLL_EN
GG143 2NR
EE143 INV
GG144 2NR
FLIP_SCREEN2
SCROLL_OUT1
M148 DFR
REG0_D1
W173 220
SCROLL_OUT1_Q
Z119 EXR
Z119
SCROLL_OUT2
S153 DFR
REG0_D2
PP155 220
SCROLL_OUT2_Q
RR128 EXR
RR128
SCROLL_OUT0
Y150 DFR
REG0_D0
FF138 220
SCROLL_OUT0_Q
PP132 EXR
PP132
D
Q
RESET
CLK
A0
B0
A1
B1
OUT

FILE NAME: **007121.pdsprj**
DESIGN TITLE: **Konami 007121**
SCROLL X
BY: Sean Gonsalves REV: 0

DATE:
03/04/2021
PAGE:
21 of 52
TIME: 00:06:09

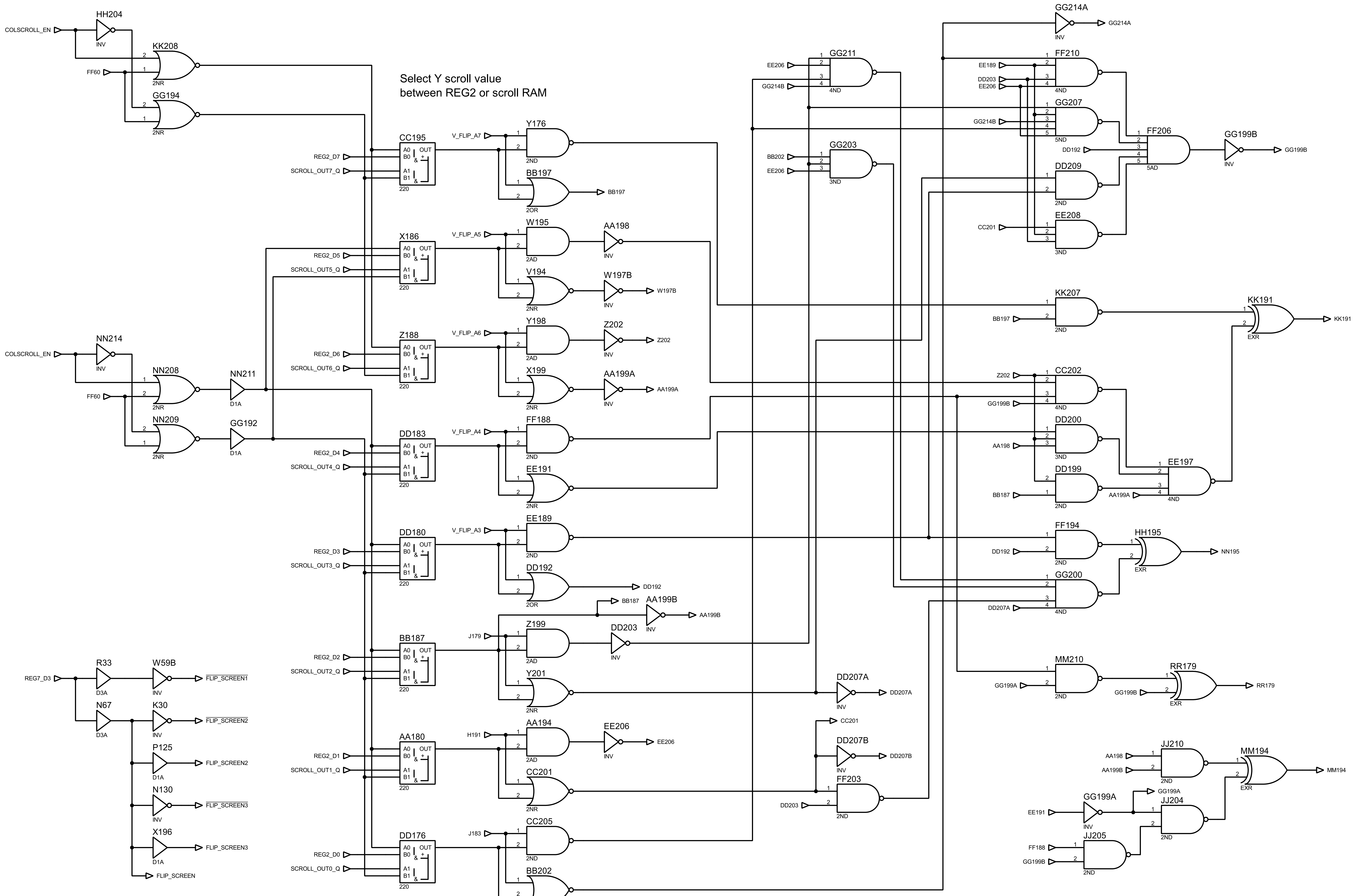
COLSCROLL_EN
HH204
INV
KK208
2NR
FF60
GG194
2NR
NN214
NN208
NN209
NN211
D1A
GG192
REG2_D7
SCROLL_OUT7_Q
CC195
REG2_D5
SCROLL_OUT5_Q
X186
REG2_D6
SCROLL_OUT6_Q
Z188
REG2_D4
SCROLL_OUT4_Q
DD183
REG2_D3
SCROLL_OUT3_Q
DD180
REG2_D2
SCROLL_OUT2_Q
BB187
REG2_D1
SCROLL_OUT1_Q
AA180
REG2_D0
SCROLL_OUT0_Q
DD176
A0
B0
A1
B1
OUT
220
V_FLIP_A7
Y176
2ND
BB197
2OR
V_FLIP_A5
W195
2AD
AA198
V194
2NR
W197B
V_FLIP_A6
Y198
Z202
X199
AA199A
V_FLIP_A4
FF188
EE191
V_FLIP_A3
EE189
DD192
J179
Z199
DD203
Y201
BB187
AA199B
DD207A
H191
AA194
EE206
CC201
DD207B
FF203
J183
CC205
BB202
REG7_D3
R33
D3A
W59B
FLIP_SCREEN1
N67
K30
FLIP_SCREEN2
P125
FLIP_SCREEN2
N130
FLIP_SCREEN3
X196
FLIP_SCREEN3
FLIP_SCREEN
GG211
4ND
GG214B
GG203
3ND
BB202
GG214A
FF210
EE189
DD203
EE206
GG207
5ND
FF206
5AD
GG199B
DD209
EE208
CC201
KK207
BB197
KK191
EXR
CC202
GG199B
DD200
AA198
DD199
BB187
EE197
AA199A
FF194
DD192
HH195
NN195
GG200
DD207A
MM210
GG199A
RR179
JJ210
AA199B
MM194
GG199A
EE191
JJ204
JJ205
FF188

Select Y scroll value
between REG2 or scroll RAM

FILE NAME: **007121.pdsprj**
DESIGN TITLE: **Konami 007121**
SCROLL Y
BY: Sean Gonsalves
REV: 0
DATE: 03/04/2021
PAGE: 22 of 52

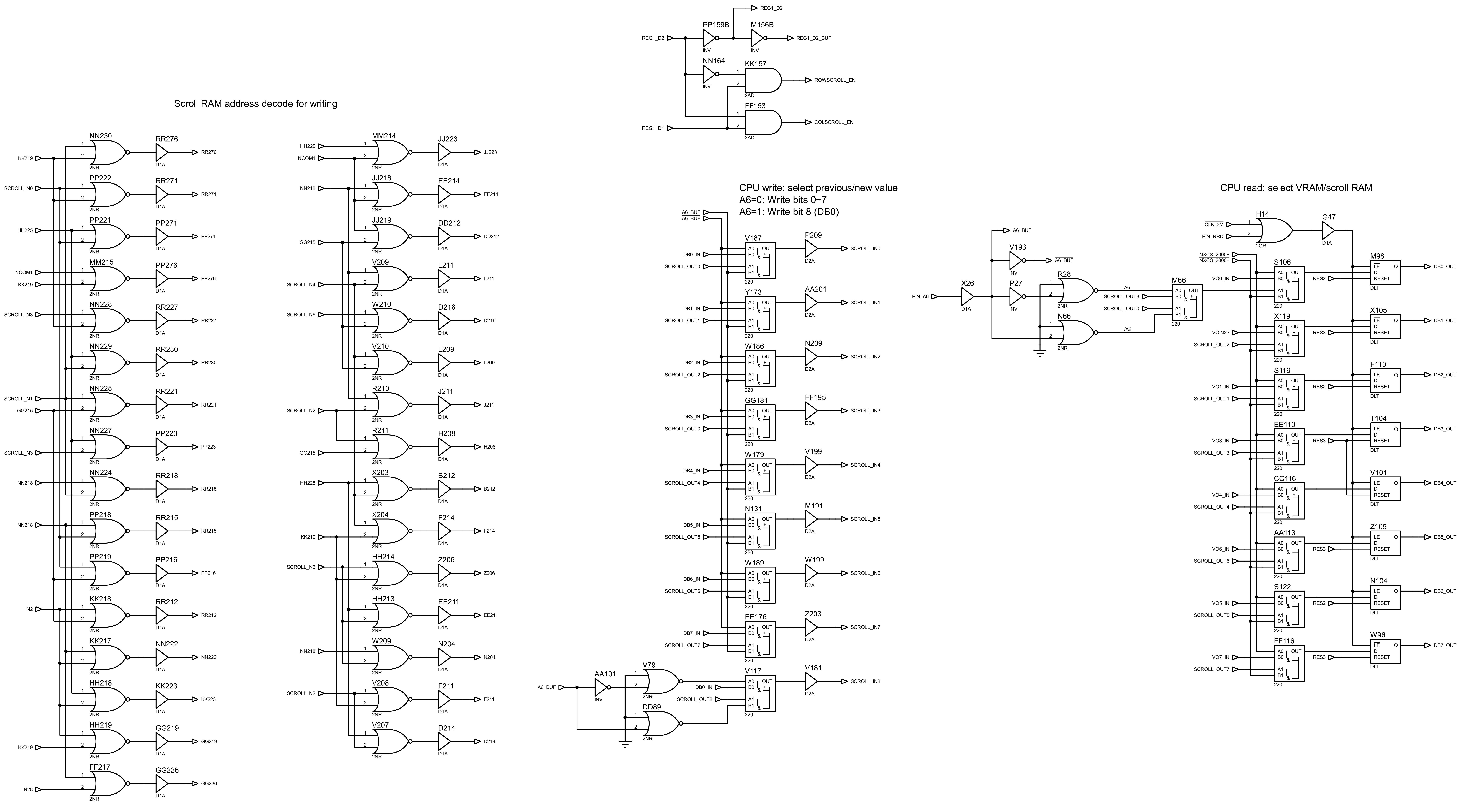
Scroll RAM address decode for writing
KK219
SCROLL_N0
HH225
NCOM1
KK219
SCROLL_N3
SCROLL_N1
GG215
SCROLL_N3
NN218
NN218
N2
KK219
N28
NN230
RR276
PP222
RR271
PP221
PP271
MM215
PP276
NN228
RR227
NN229
RR230
NN225
RR221
NN227
PP223
NN224
RR218
PP218
RR215
PP219
PP216
KK218
RR212
KK217
NN222
HH218
KK223
HH219
GG219
FF217
GG226
2NR
D1A
HH225
NCOM1
NN218
GG215
SCROLL_N4
SCROLL_N6
SCROLL_N2
GG215
HH225
KK219
SCROLL_N6
NN218
SCROLL_N2
MM214
JJ223
JJ218
EE214
JJ219
DD212
V209
L211
W210
D216
V210
L209
R210
J211
R211
H208
X203
B212
X204
F214
HH214
Z206
HH213
EE211
W209
N204
V208
F211
V207
D214
REG1_D2
PP159B
INV
M156B
REG1_D2
REG1_D2_BUF
NN164
KK157
2AD
ROWSCROLL_EN
FF153
COLSCROLL_EN
REG1_D1
CPU write: select previous/new value
A6=0: Write bits 0~7
A6=1: Write bit 8 (DB0)
A6_BUF
A6_BUF
V187
P209
SCROLL_IN0
DB0_IN
SCROLL_OUT0
Y173
AA201
SCROLL_IN1
DB1_IN
SCROLL_OUT1
W186
N209
SCROLL_IN2
DB2_IN
SCROLL_OUT2
GG181
FF195
SCROLL_IN3
DB3_IN
SCROLL_OUT3
W179
V199
SCROLL_IN4
DB4_IN
SCROLL_OUT4
N131
M191
SCROLL_IN5
DB5_IN
SCROLL_OUT5
W189
W199
SCROLL_IN6
DB6_IN
SCROLL_OUT6
EE176
Z203
SCROLL_IN7
DB7_IN
SCROLL_OUT7
A0
B0
A1
B1
OUT
220
D2A
A6_BUF
AA101
V79
DD89
V117
V181
DB0_IN
SCROLL_OUT8
SCROLL_IN8
A6_BUF
V193
A6_BUF
PIN_A6
X26
P27
R28
N66
A6
SCROLL_OUT8
SCROLL_OUT0
/A6
M66
CPU read: select VRAM/scroll RAM
CLK_3M
PIN_NRD
H14
2OR
G47
NXCS_2000+
NXCS_2000+
S106
VO0_IN
RES2
M98
LE
D
RESET
Q
DLT
DB0_OUT
X119
VOIN2?
SCROLL_OUT2
RES3
X105
DB1_OUT
S119
VO1_IN
SCROLL_OUT1
RES2
F110
DB2_OUT
EE110
VO3_IN
SCROLL_OUT3
RES3
T104
DB3_OUT
CC116
VO4_IN
SCROLL_OUT4
V101
DB4_OUT
AA113
VO6_IN
SCROLL_OUT6
RES3
Z105
DB5_OUT
S122
VO5_IN
SCROLL_OUT5
RES2
N104
DB6_OUT
FF116
VO7_IN
SCROLL_OUT7
RES3
W96
DB7_OUT

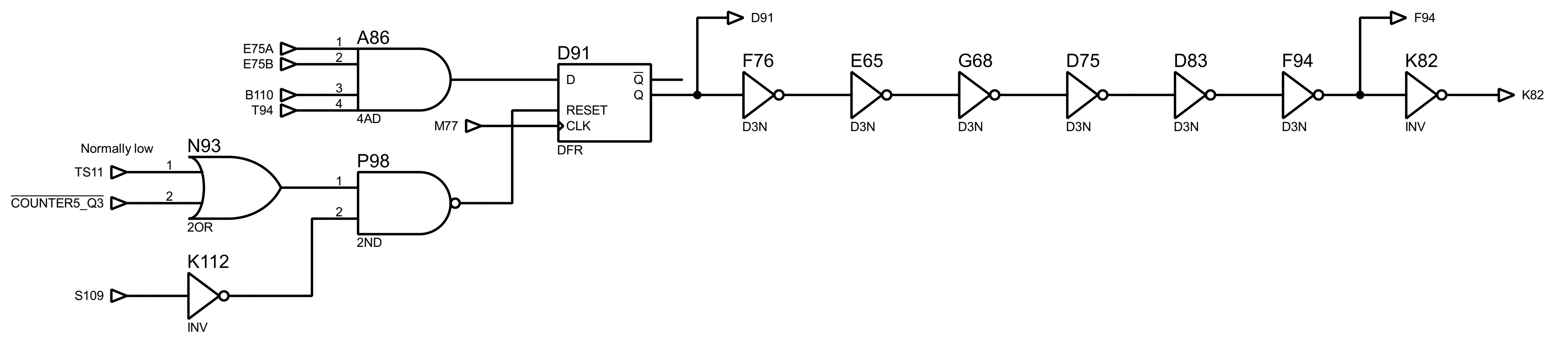
E75A
E75B
B110
T94
A86
4AD
D91
D
Q
RESET
CLK
DFR
M77
D91
F76
E65
G68
D75
D83
F94
K82
D3N
INV
F94
K82
Normally low
TS11
COUNTER5_Q3
N93
2OR
P98
2ND
S109
K112
INV

FILE NAME: 007121.pdsprj
DESIGN TITLE: Konami 007121
SCROLL RAM ACCESS
BY: Sean Gonsalves
REV: 0
DATE: 03/04/2021
PAGE: 23 of 52
TIME: 00:06:09

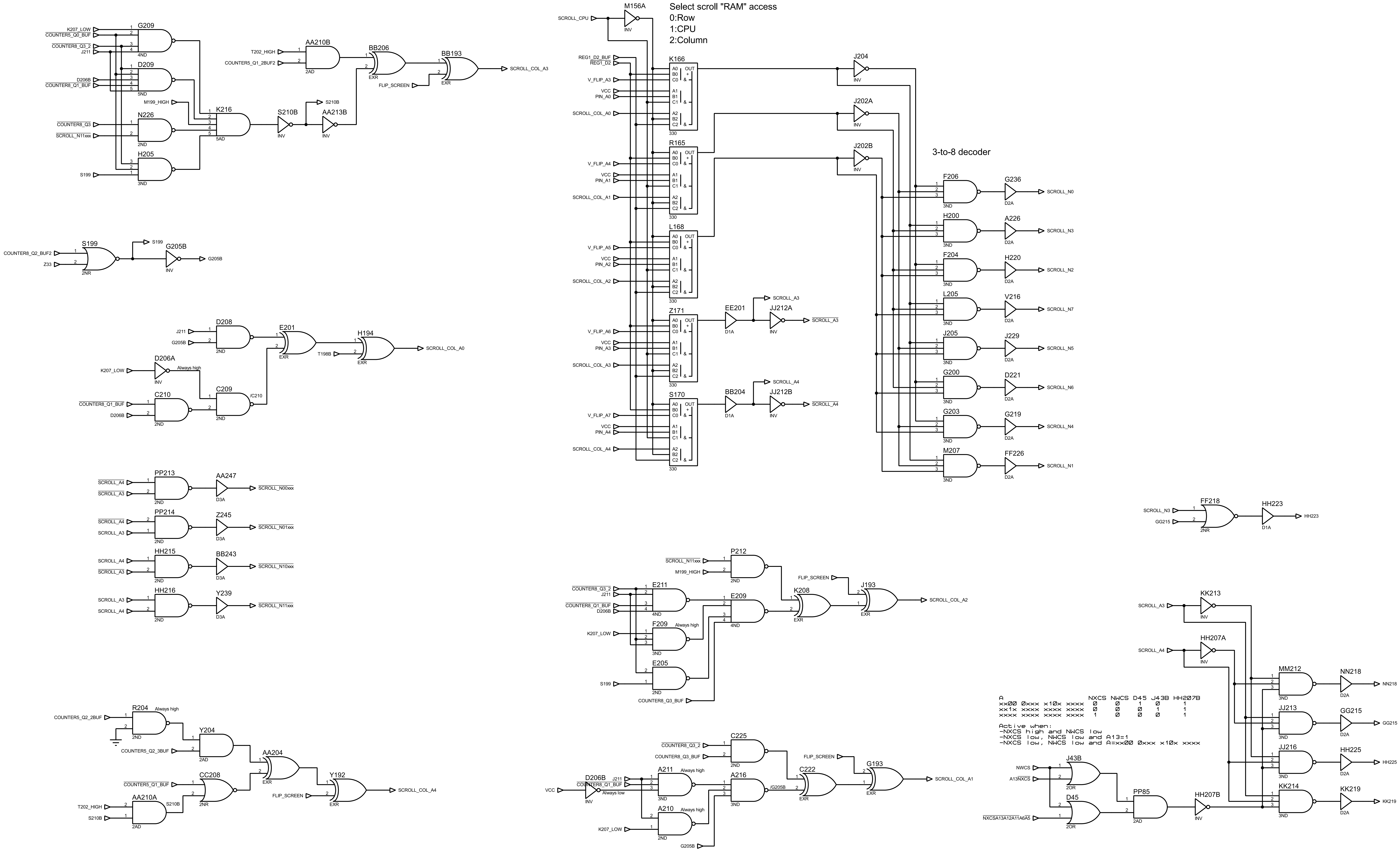
Select scroll "RAM" access
0:Row
1:CPU
2:Column
3-to-8 decoder
SCROLL_CPU
M156A
INV
REG1_D2_BUF
REG1_D2
V_FLIP_A3
VCC
PIN_A0
SCROLL_COL_A0
K166
R165
L168
Z171
S170
330
V_FLIP_A4
PIN_A1
SCROLL_COL_A1
V_FLIP_A5
PIN_A2
SCROLL_COL_A2
V_FLIP_A6
PIN_A3
SCROLL_COL_A3
V_FLIP_A7
PIN_A4
SCROLL_COL_A4
J204
J202A
J202B
EE201
JJ212A
SCROLL_A3
BB204
JJ212B
SCROLL_A4
F206
G236
SCROLL_N0
H200
A226
SCROLL_N3
F204
H220
SCROLL_N2
L205
V216
SCROLL_N7
J205
J229
SCROLL_N5
G200
D221
SCROLL_N6
G203
G219
SCROLL_N4
M207
FF226
SCROLL_N1
K207_LOW
COUNTER5_Q0_BUF
COUNTER8_Q3_2
J211
G209
D206B
COUNTER8_Q1_BUF
D209
M199_HIGH
K216
COUNTER8_Q3
SCROLL_N11xxx
N226
S199
H205
S210B
AA213B
T202_HIGH
COUNTER5_Q1_2BUF
AA210B
BB206
FLIP_SCREEN
BB193
SCROLL_COL_A3
COUNTER8_Q2_BUF2
Z33
G205B
D208
E201
H194
T198B
SCROLL_COL_A0
D206A
Always high
C209
/C210
C210
PP213
AA247
SCROLL_N00xxx
PP214
Z245
SCROLL_N01xxx
HH215
BB243
SCROLL_N10xxx
HH216
Y239
R204
COUNTER5_Q2_2BUF
Y204
COUNTER5_Q2_3BUF
AA204
CC208
COUNTER5_Q1_BUF
AA210A
Y192
SCROLL_COL_A4
P212
E211
E209
K208
J193
SCROLL_COL_A2
F209
E205
COUNTER8_Q3_BUF
C225
D206B
A211
A216
/G205B
C222
G193
SCROLL_COL_A1
A210
Always low
FF218
HH223
GG215
KK213
HH207A
MM212
NN218
JJ213
JJ216
HH225
KK214
KK219
J43B
NWCS
A13NXCS
D45
NXCSA13A12A11A6A5
PP85
HH207B
2ND
3ND
4ND
5ND
5AD
2AD
2NR
2OR
EXR
D1A
D2A
D3A

A	NXCS	NWCS	D45	J43B	HH207B
xx00 0xxx x10x xxxx	0	0	1	0	1
xx1x xxxx xxxx xxxx	0	0	0	1	1
xxxx xxxx xxxx xxxx	1	0	0	0	1

Active when:
-NXCS high and NWCS low
-NXCS low, NWCS low and A13=1
-NXCS low, NWCS low and A=xx00 0xxx x10x xxxx

FILE NAME: **007121.pdsprj**
DESIGN TITLE: **Konami 007121**
SCROLL RAM ADDRESS
BY: **Sean Gonsalves** REV: **0**
DATE: **03/04/2021**
PAGE: **24 of 52**

SCROLL color bit 0 SR

Error: 3-to-8 decoder AA2A must be used

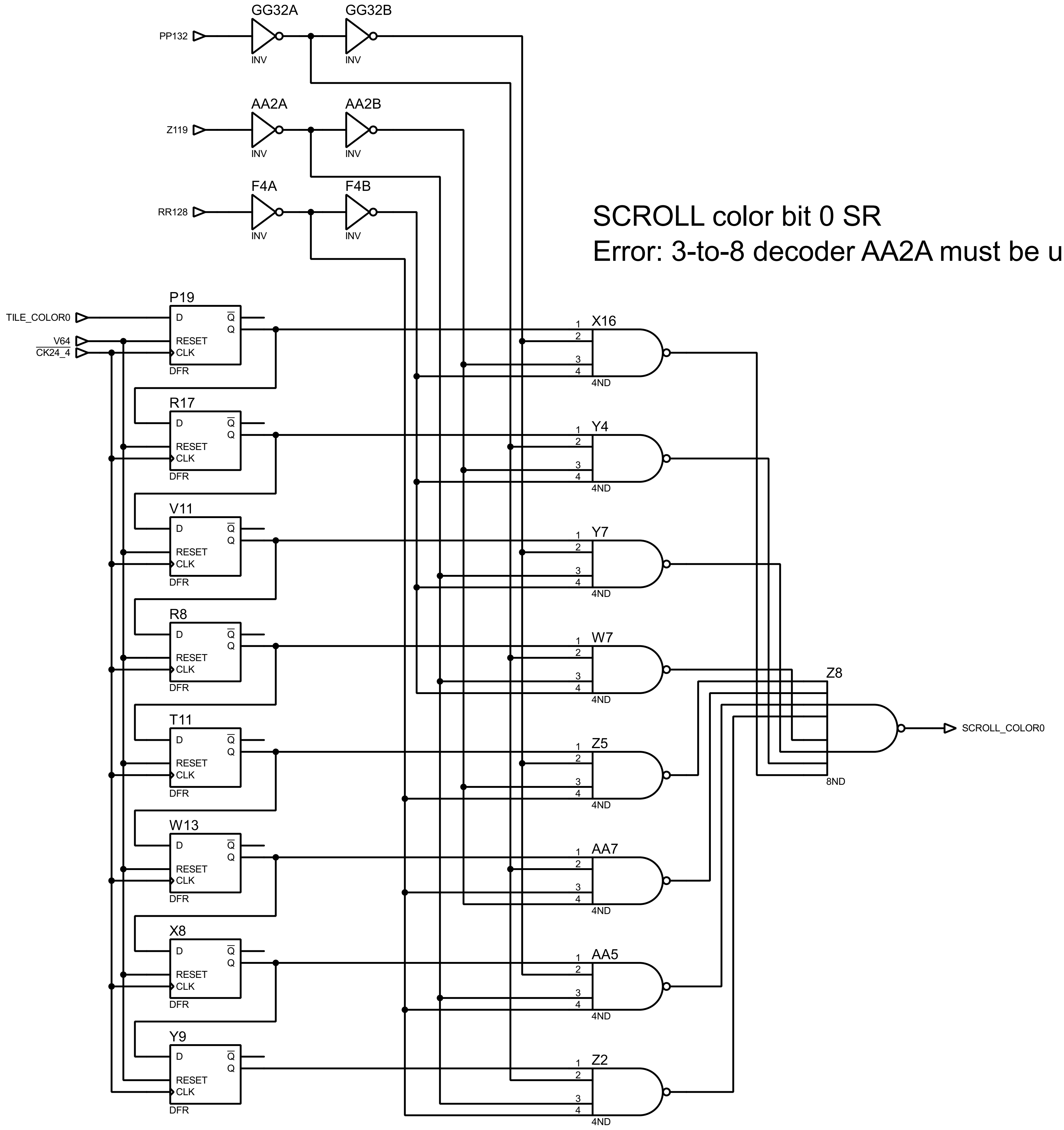
PP132
GG32A
GG32B
INV
Z119
AA2A
AA2B
RR128
F4A
F4B
TILE_COLOR0
V64
CK24_4
P19
R17
V11
R8
T11
W13
X8
Y9
D
RESET
CLK
Q
DFR
X16
Y4
Y7
W7
Z5
AA7
AA5
Z2
4ND
Z8
8ND
SCROLL_COLOR0

SCROLL color bit 3 SR

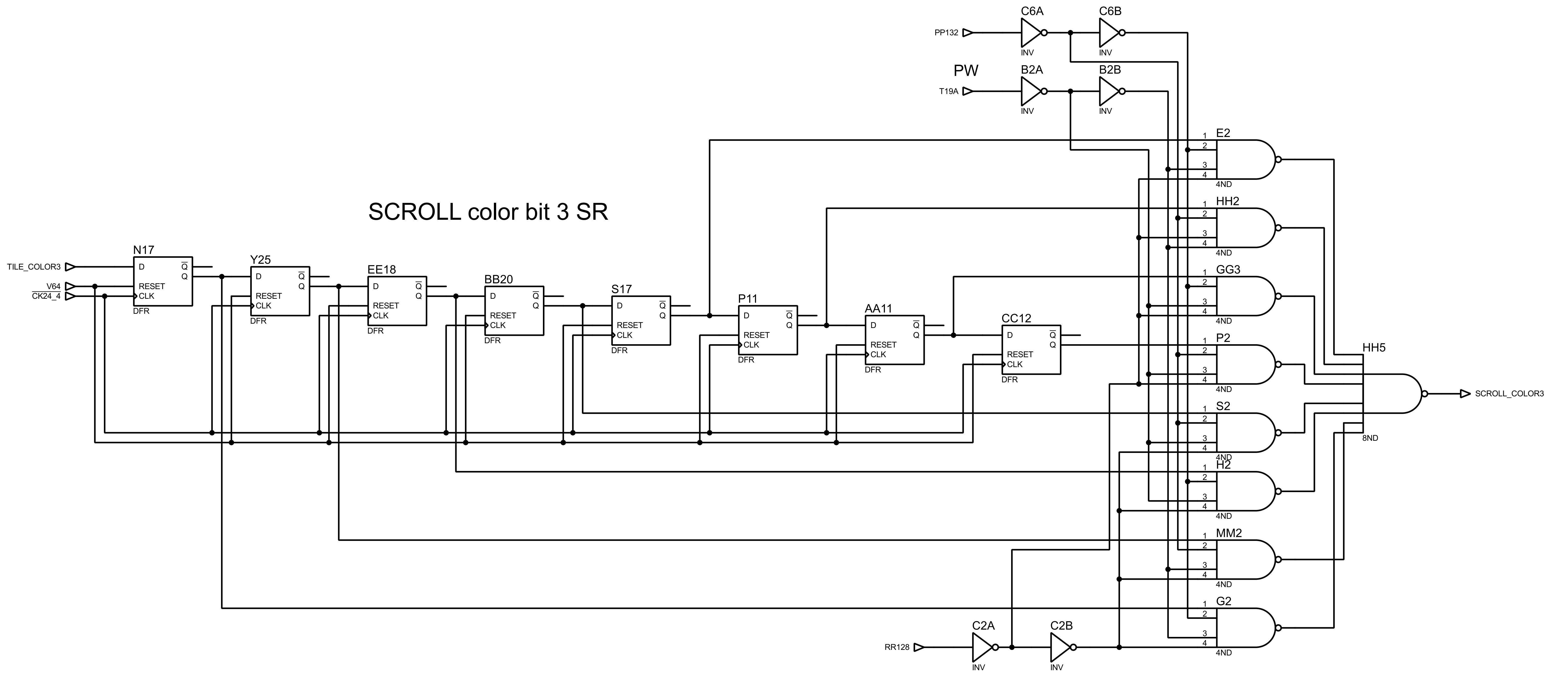
PP132
C6A
C6B
PW
T19A
B2A
B2B
INV
TILE_COLOR3
V64
CK24_4
N17
Y25
EE18
BB20
S17
P11
AA11
CC12
D
RESET
CLK
Q
DFR
E2
HH2
GG3
P2
S2
H2
MM2
G2
4ND
HH5
8ND
SCROLL_COLOR3
RR128
C2A
C2B

SCROLL color bit 2 SR

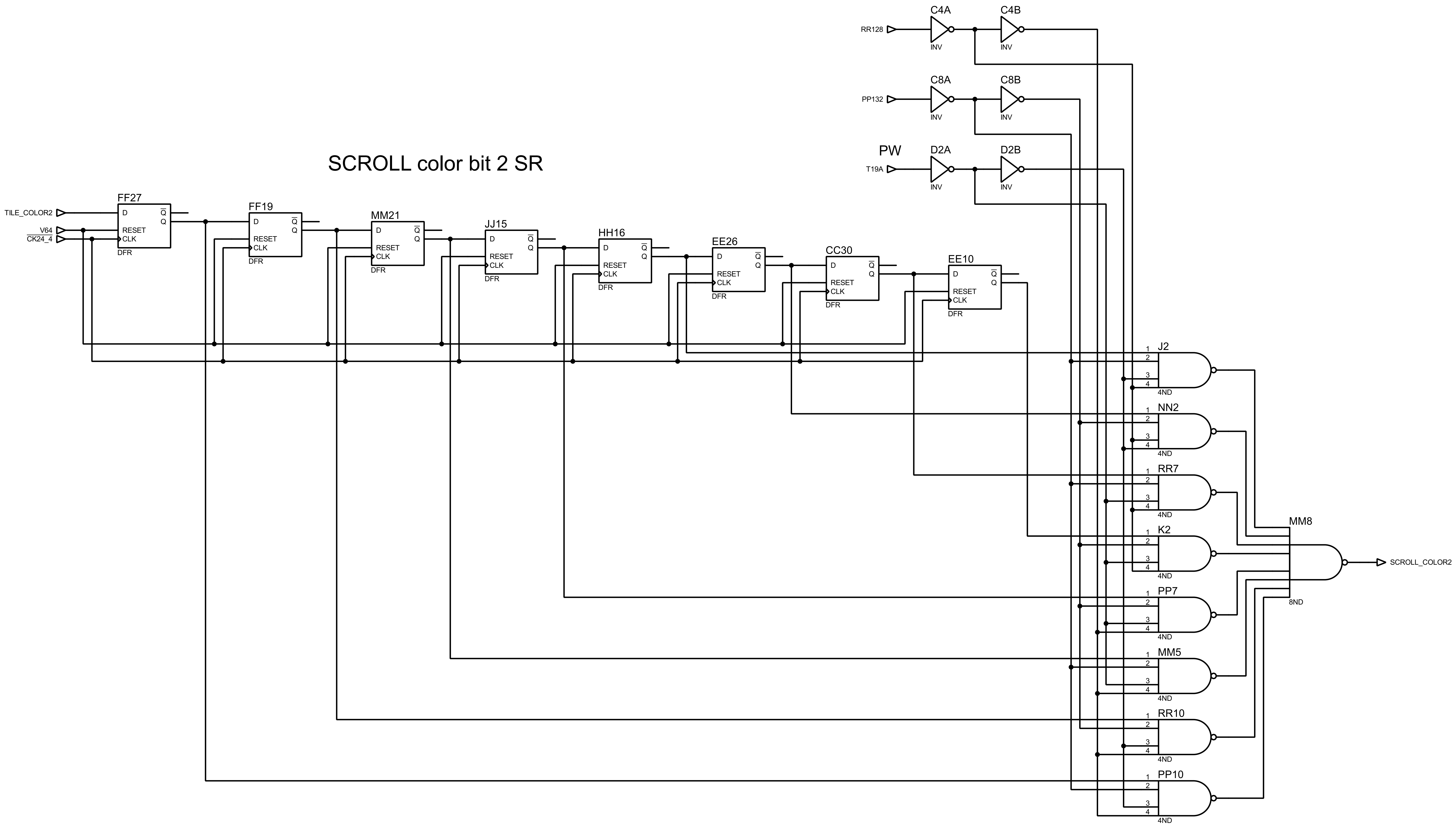
RR128
C4A
C4B
PP132
C8A
C8B
PW
T19A
D2A
D2B
INV
TILE_COLOR2
V64
CK24_4
FF27
FF19
MM21
JJ15
HH16
EE26
CC30
EE10
D
RESET
CLK
Q
DFR
J2
NN2
RR7
K2
PP7
MM5
RR10
PP10
4ND
MM8
8ND
SCROLL_COLOR2

SCROLL color bit 1 SR

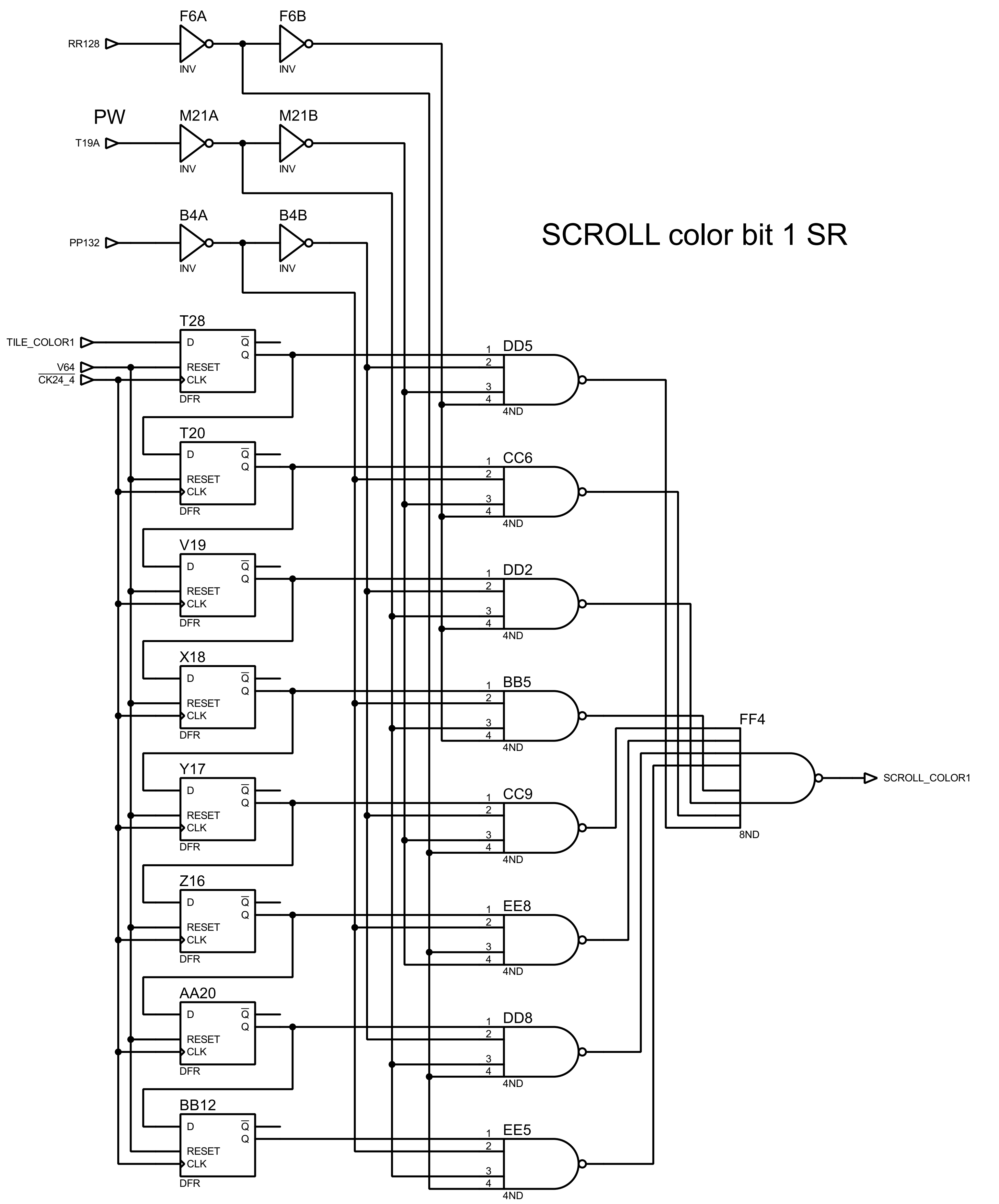
RR128
F6A
F6B
PW
T19A
M21A
M21B
PP132
B4A
B4B
INV
TILE_COLOR1
V64
CK24_4
T28
T20
V19
X18
Y17
Z16
AA20
BB12
D
RESET
CLK
Q
DFR
DD5
CC6
DD2
BB5
CC9
EE8
DD8
EE5
4ND
FF4
8ND
SCROLL_COLOR1

FILE NAME: **007121.pdsprj**
DESIGN TITLE: **Konami 007121**
BG SHIFT REGS
BY: Sean Gonsalves
REV: 0
DATE: **03/04/2021**
PAGE: 25 of 52
TIME: 00:06:09

SPR/SCROLL priority bit SR

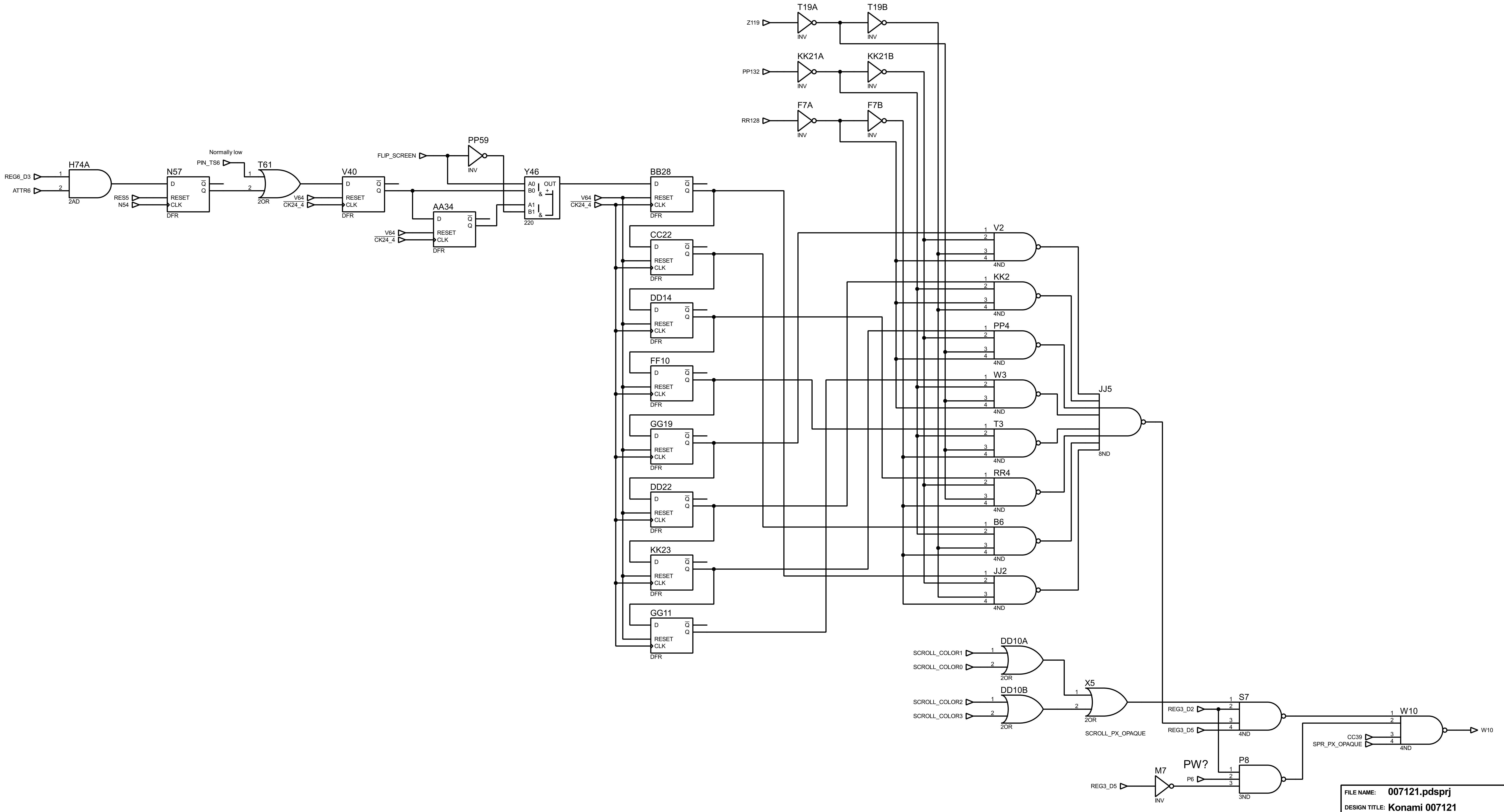

Z119
T19A
T19B
INV
PP132
KK21A
KK21B
RR128
F7A
F7B
FLIP_SCREEN
PP59
Normally low
PIN_TS6
REG6_D3
ATTR6
H74A
2AD
N57
D
RESET
CLK
DFR
RES5
N54
T61
2OR
V40
V64
CK24_4
Y46
A0
B0
A1
B1
OUT
220
AA34
BB28
CC22
DD14
FF10
GG19
DD22
KK23
GG11
Q
V2
KK2
PP4
W3
T3
RR4
B6
JJ2
4ND
JJ5
8ND
DD10A
DD10B
SCROLL_COLOR1
SCROLL_COLOR0
SCROLL_COLOR2
SCROLL_COLOR3
X5
SCROLL_PX_OPAQUE
S7
REG3_D2
REG3_D5
W10
CC39
SPR_PX_OPAQUE
W10
P8
PW?
P6
3ND
M7
REG3_D5

FILE NAME: **007121.pdsprj**
DESIGN TITLE: **Konami 007121**
PRIORITY
BY: Sean Gonsalves
REV: 0
DATE:
03/04/2021
PAGE:
26 of 52
TIME: 00:06:09

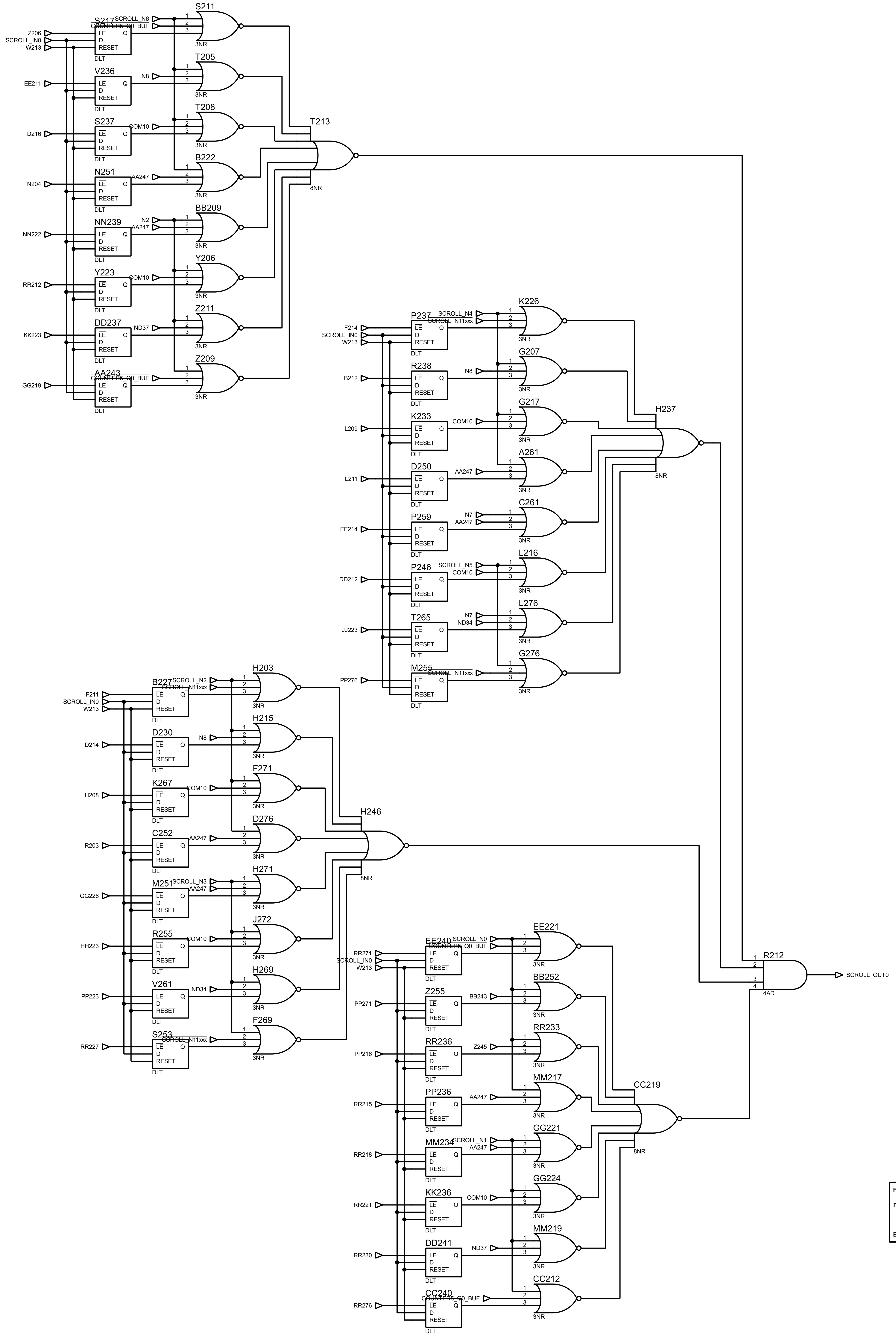
S217
SCROLL_N6
COUNTERS_Q0_BUF
Z206
SCROLL_IN0
W213
S211
T205
T208
B222
BB209
Y206
Z211
Z209
3NR
V236
EE211
N8
S237
D216
COM10
N251
N204
AA247
NN239
NN222
N2
Y223
RR212
DD237
KK223
ND37
AA243
GG219
T213
8NR
LE
D
RESET
Q
DLT
P237
SCROLL_N4
SCROLL_N11xxx
F214
B212
R238
L209
K233
L211
D250
EE214
P259
N7
DD212
P246
SCROLL_N5
JJ223
T265
ND34
PP276
M255
K226
G207
G217
A261
C261
L216
L276
G276
H237
B227
SCROLL_N2
F211
D214
D230
H208
K267
R203
C252
GG226
M251
SCROLL_N3
HH223
R255
PP223
V261
RR227
S253
H203
H215
F271
D276
H271
J272
H269
F269
H246
EE240
SCROLL_N0
RR271
PP271
Z255
BB243
PP216
RR236
Z245
RR215
PP236
RR218
MM234
SCROLL_N1
RR221
KK236
RR230
DD241
RR276
CC240
EE221
BB252
RR233
MM217
GG221
GG224
MM219
CC212
CC219
R212
4AD
SCROLL_OUT0
1
2
3
4

FILE NAME: **007121.pdsprj**		DATE: **03/04/2021**
DESIGN TITLE: **Konami 007121** SCROLL BIT 0		PAGE: 27 of 52
BY: Sean Gonsalves	REV: 0	

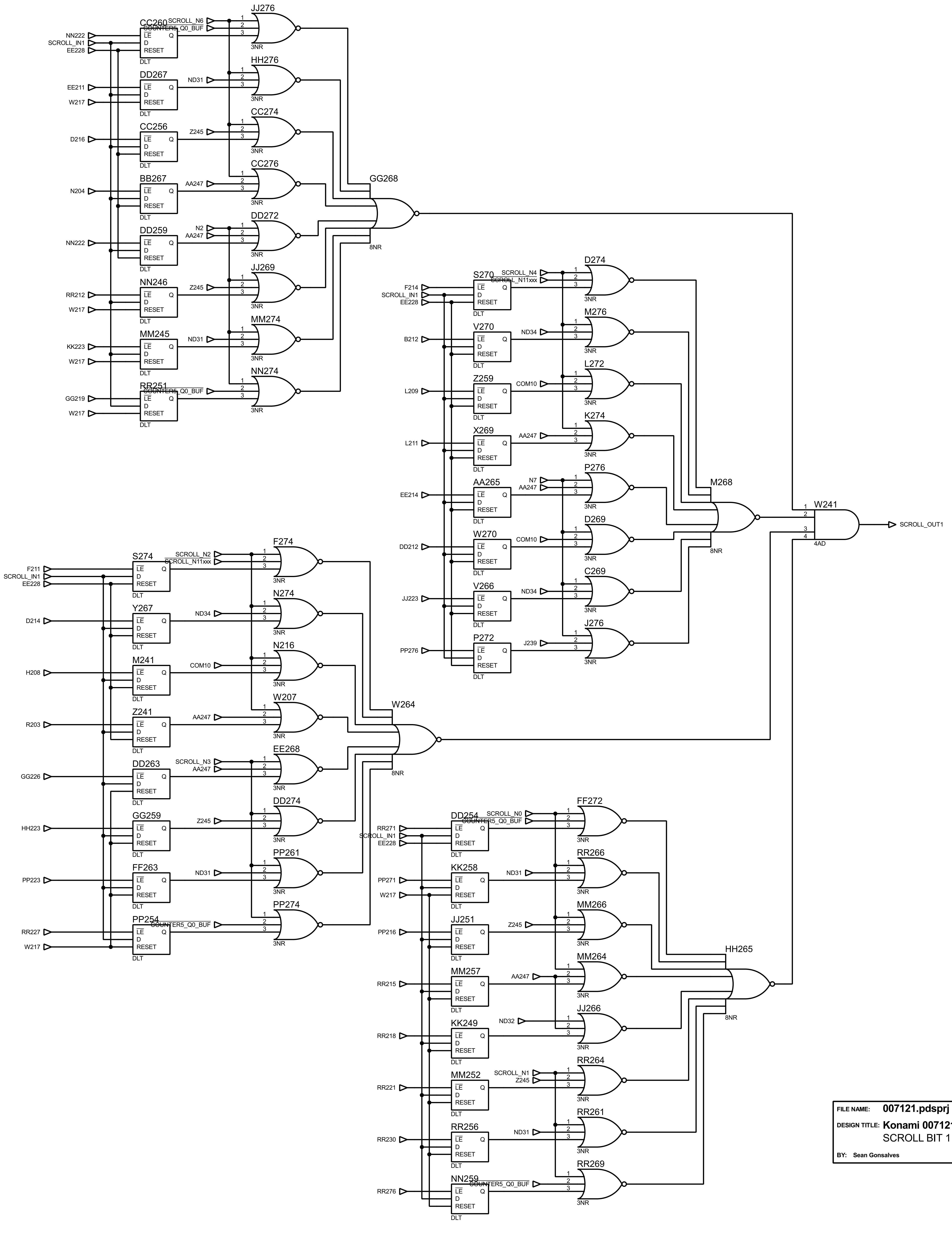

JJ276
HH276
CC274
CC276
DD272
JJ269
MM274
NN274
GG268
CC260
DD267
CC256
BB267
DD259
NN246
MM245
RR251
SCROLL_N6
COUNTER5_Q0_BUF
ND31
Z245
AA247
N2
NN222
SCROLL_IN1
EE228
EE211
W217
D216
N204
RR212
KK223
GG219
D274
M276
L272
K274
P276
D269
C269
J276
M268
S270
V270
Z259
X269
AA265
W270
V266
P272
SCROLL_N4
SCROLL_N11xxx
ND34
COM10
N7
J239
F214
B212
L209
L211
EE214
DD212
JJ223
PP276
W241
SCROLL_OUT1
4AD
F274
N274
N216
W207
EE268
DD274
PP261
PP274
W264
S274
Y267
M241
Z241
DD263
GG259
FF263
PP254
SCROLL_N2
SCROLL_N3
F211
D214
H208
R203
GG226
HH223
PP223
RR227
FF272
RR266
MM266
MM264
JJ266
RR264
RR261
RR269
HH265
DD254
KK258
JJ251
MM257
KK249
MM252
RR256
NN259
SCROLL_N0
SCROLL_N1
ND32
RR271
PP271
PP216
RR215
RR218
RR221
RR230
RR276
LE
D
Q
RESET
DLT
3NR
8NR

FILE NAME: **007121.pdsprj**

DESIGN TITLE: **Konami 007121**

SCROLL BIT 1

BY: Sean Gonsalves

REV: 0

DATE:

03/04/2021

PAGE:

28 of 52

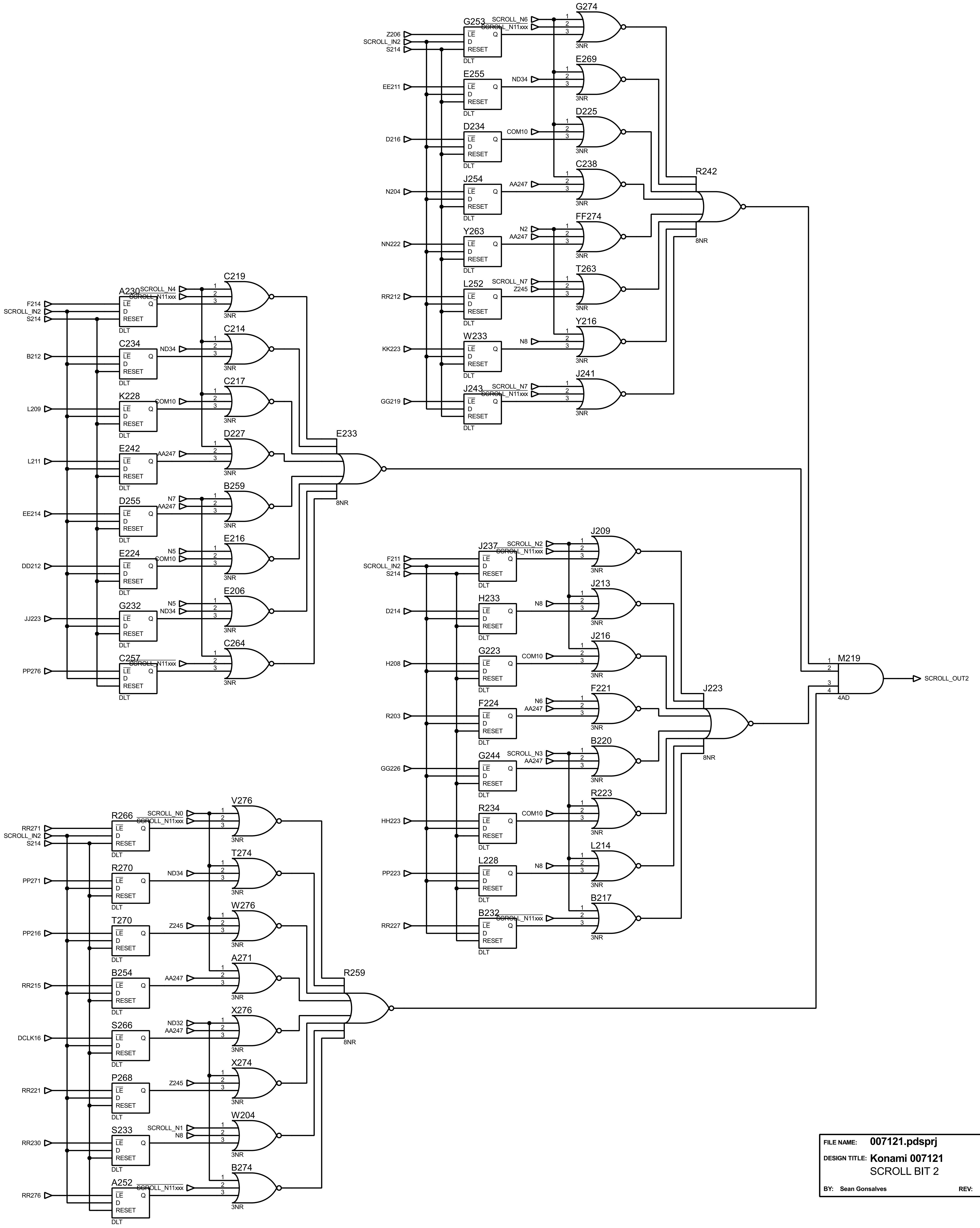
G253
E255
D234
J254
Y263
L252
W233
J243
G274
E269
D225
C238
FF274
T263
Y216
J241
R242
8NR
Z206
SCROLL_IN2
S214
EE211
D216
N204
NN222
RR212
KK223
GG219
SCROLL_N6
SCROLL_N11xxx
ND34
COM10
AA247
N2
SCROLL_N7
Z245
N8
A230
C234
K228
E242
D255
E224
G232
C257
C219
C214
C217
D227
B259
E216
E206
C264
E233
F214
B212
L209
L211
EE214
DD212
JJ223
PP276
SCROLL_N4
N7
N5
J237
H233
G223
F224
G244
R234
L228
B232
J209
J213
J216
F221
B220
R223
L214
B217
J223
F211
D214
H208
R203
GG226
HH223
PP223
RR227
SCROLL_N2
N6
SCROLL_N3
M219
4AD
SCROLL_OUT2
R266
R270
T270
B254
S266
P268
S233
A252
V276
T274
W276
A271
X276
X274
W204
B274
R259
RR271
PP271
PP216
RR215
DCLK16
RR221
RR230
RR276
SCROLL_N0
ND32
SCROLL_N1
LE
D
Q
RESET
DLT
3NR

FILE NAME: **007121.pdsprj**

DESIGN TITLE: **Konami 007121**

SCROLL BIT 2

BY: Sean Gonsalves

REV: 0

DATE:

03/04/2021

PAGE:

29 of 52

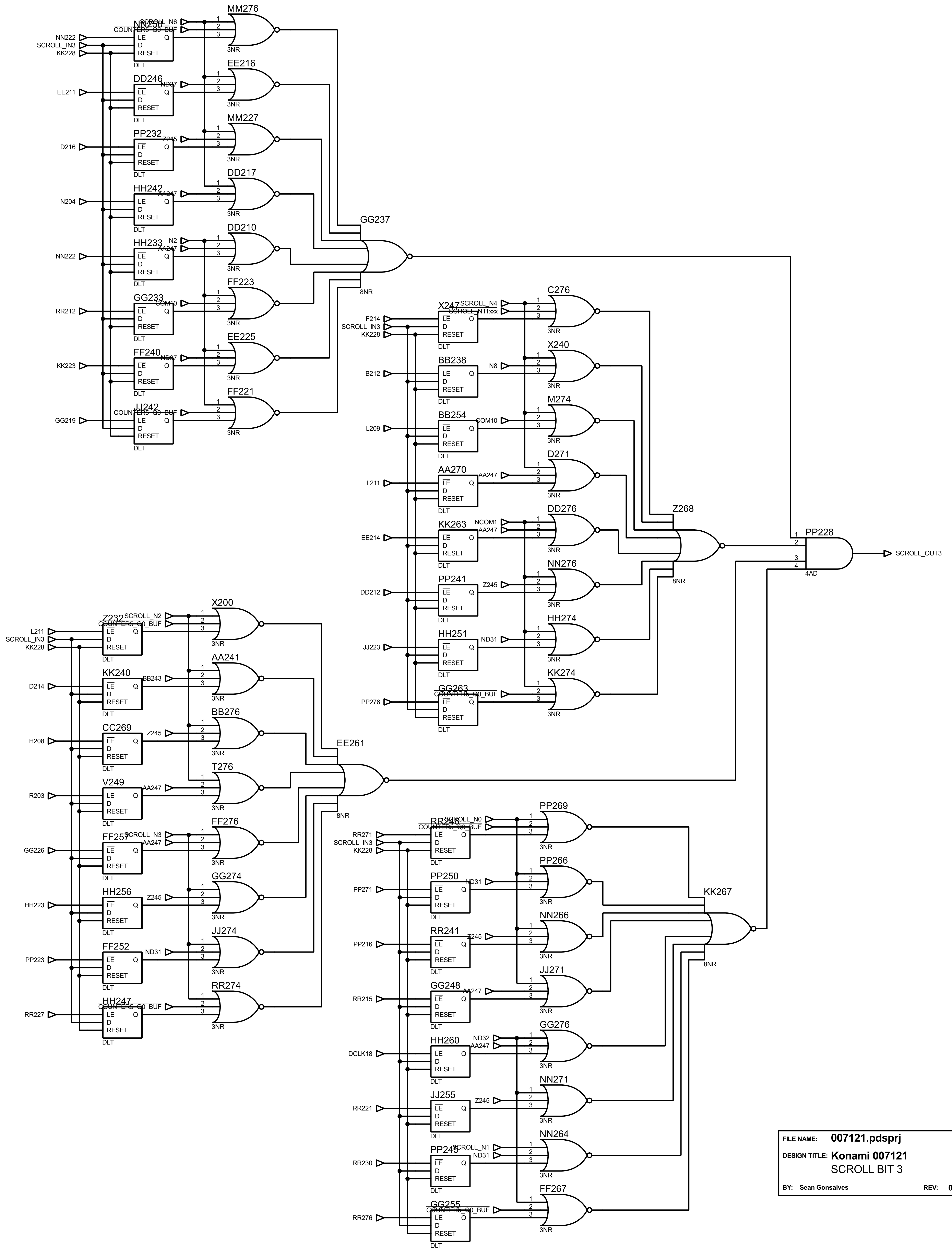
MM276
EE216
MM227
DD217
DD210
FF223
EE225
FF221
GG237
8NR
NN250
DD246
PP232
HH242
HH233
GG233
FF240
JJ242
NN222
SCROLL_IN3
KK228
EE211
D216
N204
NN222
RR212
KK223
GG219
SCROLL_N6
COUNTERS_G0_BUF
ND37
Z245
AA247
N2
COM10
LE
D
RESET
Q
DLT
3NR
X247
BB238
BB254
AA270
KK263
PP241
HH251
GG263
C276
X240
M274
D271
DD276
NN276
HH274
KK274
Z268
F214
B212
L209
L211
EE214
DD212
JJ223
PP276
SCROLL_N4
SCROLL_N11xxx
N8
NCOM1
ND31
PP228
4AD
SCROLL_OUT3
Z232
KK240
CC269
V249
FF257
HH256
FF252
HH247
X200
AA241
BB276
T276
FF276
GG274
JJ274
RR274
EE261
L211
D214
H208
R203
GG226
HH223
PP223
RR227
SCROLL_N2
BB243
SCROLL_N3
RR245
PP250
RR241
GG248
HH260
JJ255
PP245
GG255
PP269
PP266
NN266
JJ271
GG276
NN271
NN264
FF267
KK267
RR271
PP271
PP216
RR215
DCLK18
RR221
RR230
RR276
SCROLL_N0
ND32
SCROLL_N1

FILE NAME: **007121.pdsprj**	DATE: **03/04/2021**
DESIGN TITLE: **Konami 007121** SCROLL BIT 3	PAGE: 30 of 52
BY: Sean Gonsalves REV: 0	

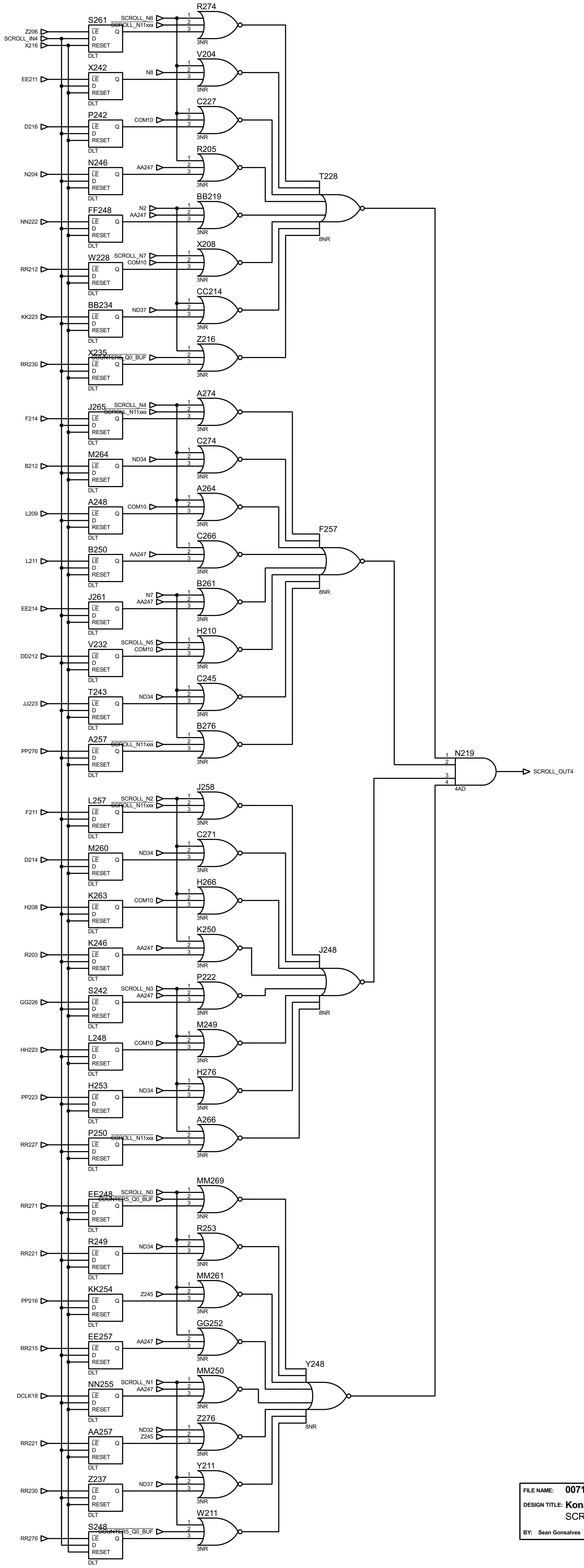
Z206
SCROLL_IN4
X216
S261
LE
D
RESET
Q
DLT
SCROLL_N6
SCROLL_N11xxx
R274
1
2
3
3NR
EE211
X242
N8
V204
D216
P242
COM10
C227
N204
N246
AA247
R205
NN222
FF248
N2
AA247
BB219
RR212
W228
SCROLL_N7
COM10
X208
KK223
BB234
ND37
CC214
RR230
X235
COUNTER5_Q0_BUF
Z216
T228
8NR
F214
J265
SCROLL_N4
SCROLL_N11xxx
A274
B212
M264
ND34
C274
L209
A248
COM10
A264
L211
B250
AA247
C266
EE214
J261
N7
AA247
B261
DD212
V232
SCROLL_N5
COM10
H210
JJ223
T243
ND34
C245
PP276
A257
SCROLL_N11xxx
B276
F257
8NR
N219
4AD
SCROLL_OUT4
F211
L257
SCROLL_N2
SCROLL_N11xxx
J258
D214
M260
ND34
C271
H208
K263
COM10
H266
R203
K246
AA247
K250
GG226
S242
SCROLL_N3
AA247
P222
HH223
L248
COM10
M249
PP223
H253
ND34
H276
RR227
P250
SCROLL_N11xxx
A266
J248
8NR
RR271
EE248
SCROLL_N0
COUNTER5_Q0_BUF
MM269
RR221
R249
ND34
R253
PP216
KK254
Z245
MM261
RR215
EE257
AA247
GG252
DCLK18
NN255
SCROLL_N1
AA247
MM250
RR221
AA257
ND32
Z245
Z276
RR230
Z237
ND37
Y211
RR276
S248
COUNTER5_Q0_BUF
W211
Y248
8NR

FILE NAME: **007121.pdsprj**

DESIGN TITLE: **Konami 007121**
SCROLL BIT 4

BY: **Sean Gonsalves** **REV:** **0**

DATE:
03/04/2021

PAGE:
31 of 52

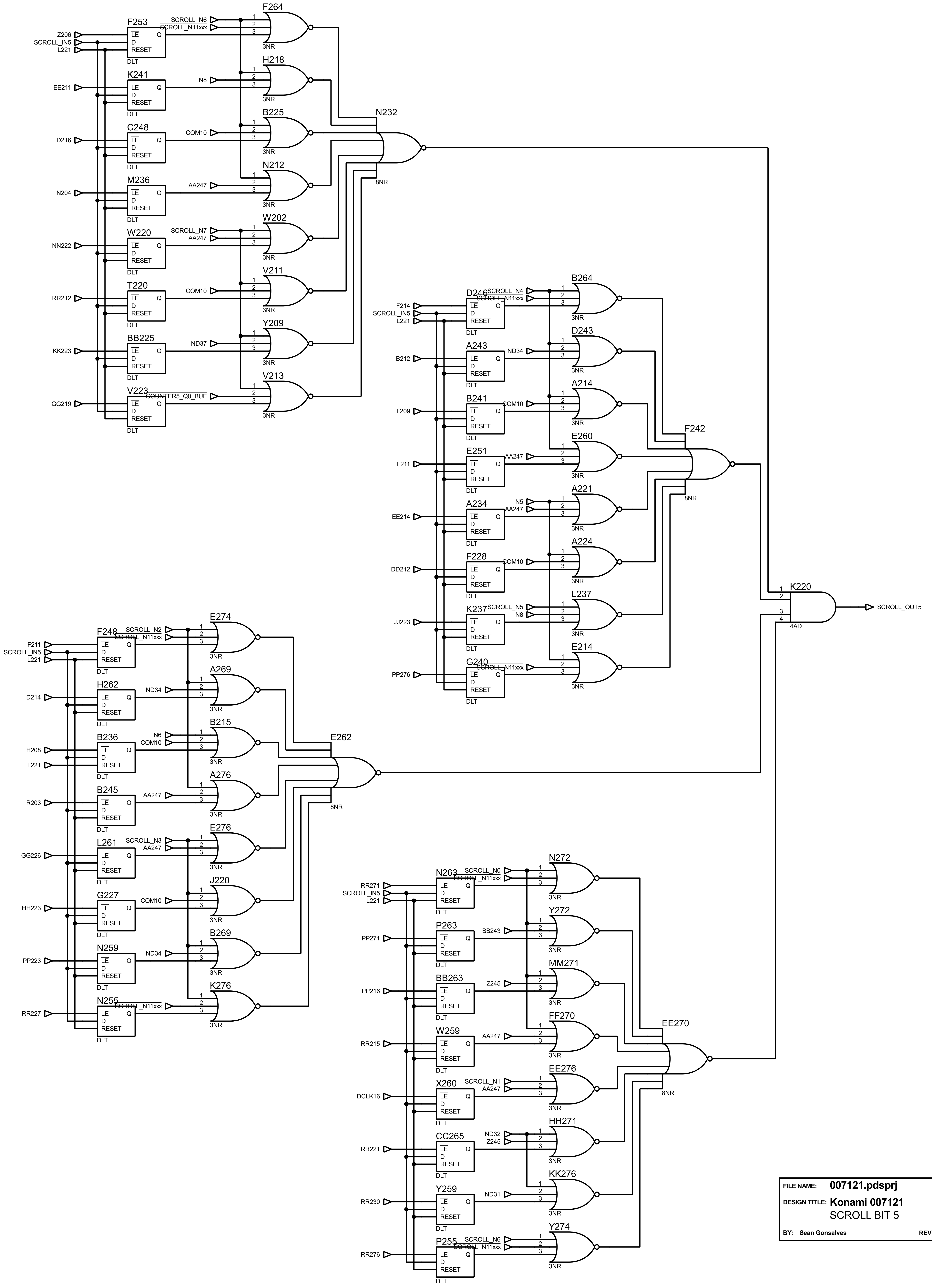
F253
F264
H218
K241
B225
C248
N212
M236
W202
W220
V211
T220
Y209
BB225
V213
V223
N232
8NR
3NR
DLT
LE
D
Q
RESET
Z206
SCROLL_IN5
L221
EE211
D216
N204
NN222
RR212
KK223
GG219
SCROLL_N6
SCROLL_N11xxx
N8
COM10
AA247
SCROLL_N7
ND37
COUNTER5_Q0_BUF
B264
D246
SCROLL_N4
D243
A243
ND34
A214
B241
E260
E251
F242
A221
A234
N5
A224
F228
L237
K237
SCROLL_N5
E214
G240
F214
B212
L209
L211
EE214
DD212
JJ223
PP276
K220
4AD
SCROLL_OUT5
E274
F248
SCROLL_N2
A269
H262
B215
B236
N6
E262
A276
B245
E276
L261
SCROLL_N3
J220
G227
B269
N259
K276
N255
F211
D214
H208
R203
GG226
HH223
PP223
RR227
N272
N263
SCROLL_N0
Y272
P263
BB243
MM271
BB263
Z245
FF270
W259
EE270
EE276
X260
SCROLL_N1
HH271
CC265
ND32
KK276
Y259
ND31
Y274
P255
RR271
PP271
PP216
RR215
DCLK16
RR221
RR230
RR276

FILE NAME: **007121.pdsprj**

DESIGN TITLE: **Konami 007121**
SCROLL BIT 5

BY: Sean Gonsalves REV: 0

DATE: **03/04/2021**

PAGE: 32 of 52

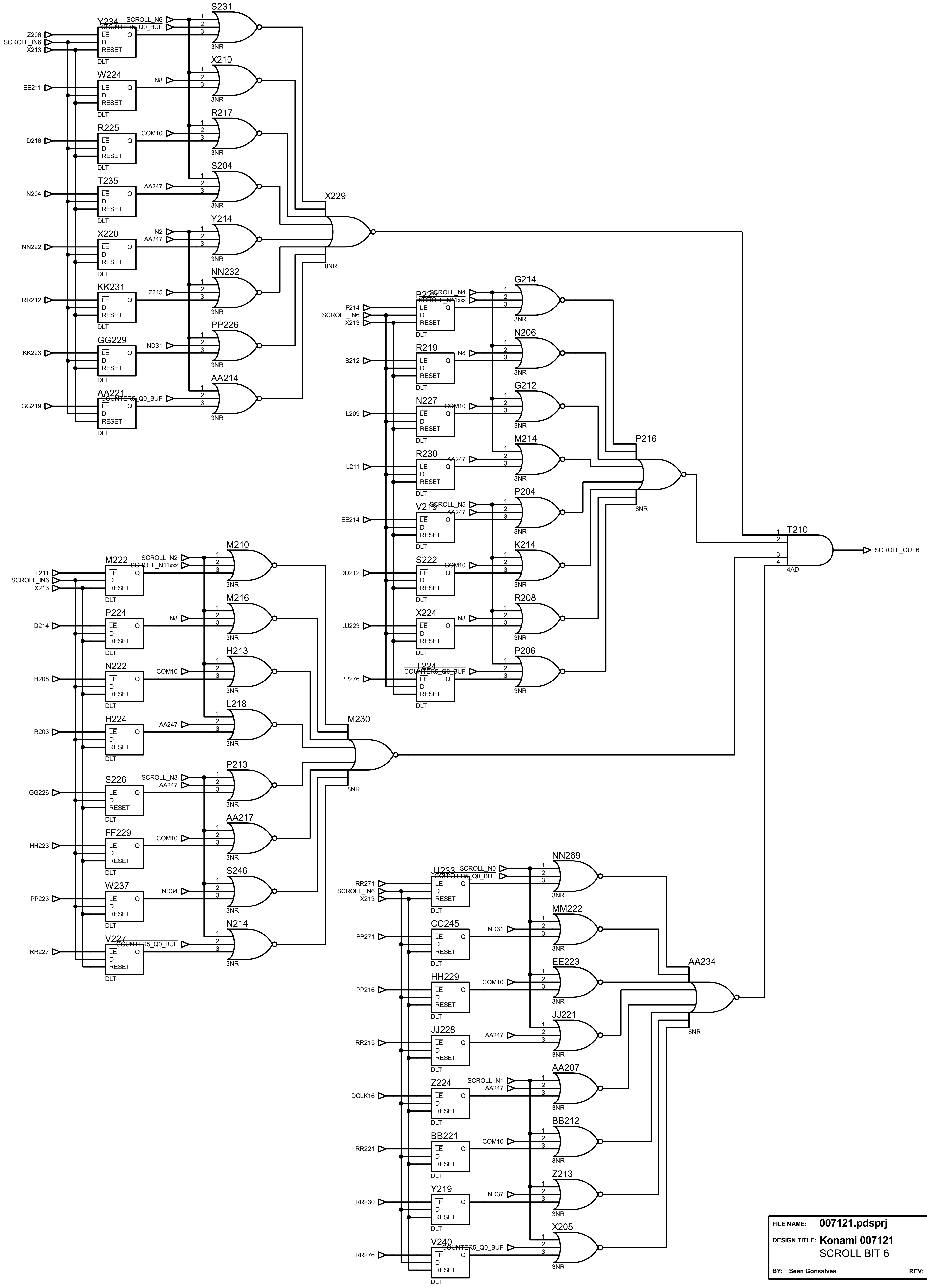
Y234
Z206
SCROLL_IN6
X213
SCROLL_N6
COUNTER5_Q0_BUF
S231
X210
W224
EE211
N8
R217
R225
D216
COM10
S204
T235
N204
AA247
Y214
X220
NN222
N2
X229
NN232
KK231
RR212
Z245
PP226
GG229
KK223
ND31
AA214
AA221
GG219
LE
D
RESET
Q
DLT
3NR
8NR
G214
P229
F214
SCROLL_N4
SCROLL_N11xxx
N206
R219
B212
G212
N227
L209
M214
R230
L211
P216
P204
V219
SCROLL_N5
EE214
K214
S222
DD212
R208
X224
JJ223
P206
T224
PP276
T210
4AD
SCROLL_OUT6
M210
M222
F211
SCROLL_N2
M216
P224
D214
H213
N222
H208
L218
H224
R203
M230
P213
S226
SCROLL_N3
GG226
AA217
FF229
HH223
S246
W237
ND34
PP223
N214
V227
RR227
NN269
JJ233
RR271
SCROLL_N0
MM222
CC245
PP271
EE223
HH229
PP216
AA234
JJ221
JJ228
RR215
AA207
Z224
SCROLL_N1
DCLK16
BB212
BB221
RR221
Z213
Y219
ND37
RR230
X205
V240
RR276

FILE NAME: **007121.pdsprj**

DESIGN TITLE: **Konami 007121**

SCROLL BIT 6

BY: Sean Gonsalves

REV: 0

DATE:

03/04/2021

PAGE:

33 of 52

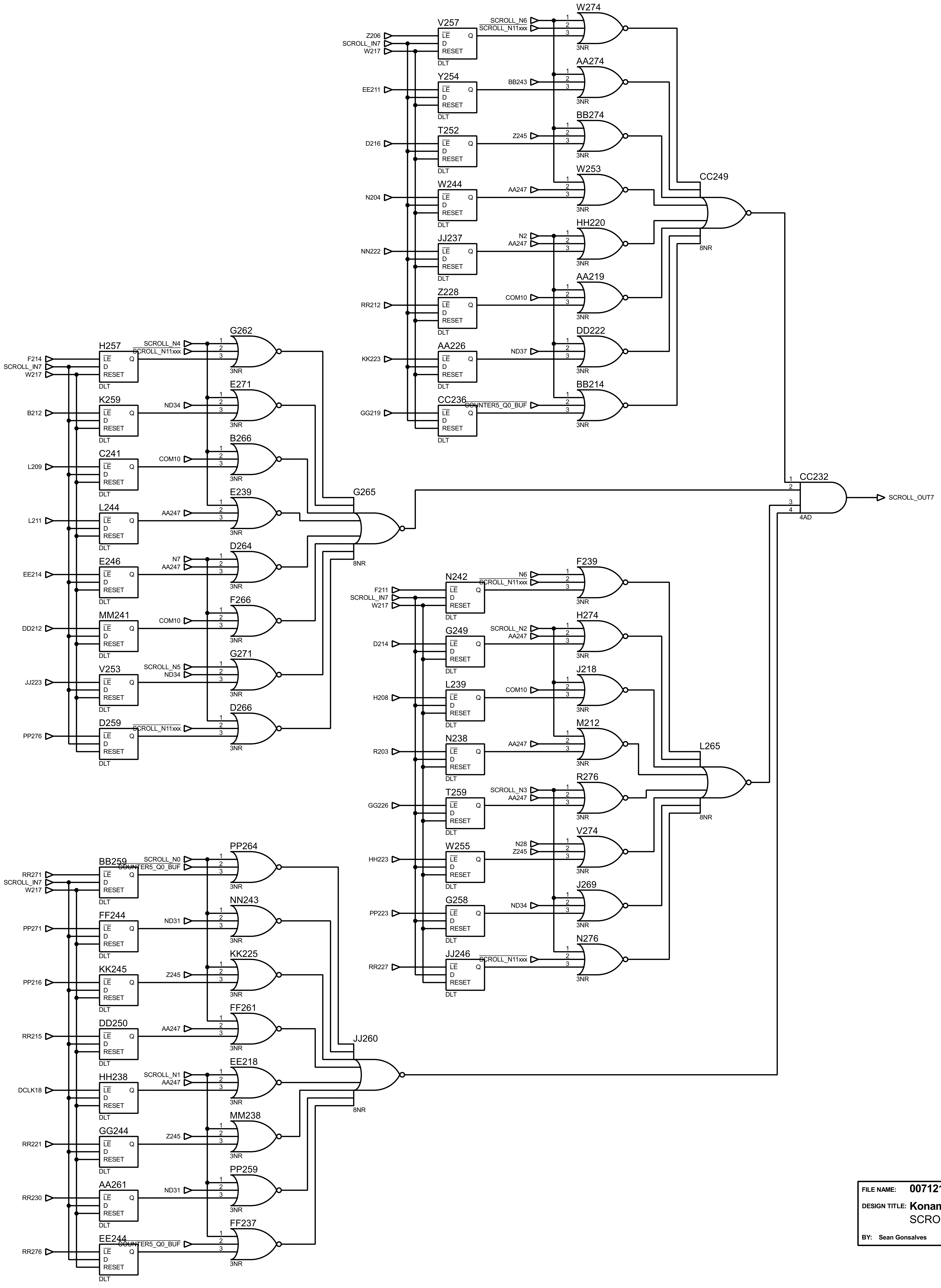

V257
Y254
T252
W244
JJ237
Z228
AA226
CC236
Z206
SCROLL_IN7
W217
EE211
D216
N204
NN222
RR212
KK223
GG219
SCROLL_N6
SCROLL_N11xxx
BB243
Z245
AA247
N2
COM10
ND37
COUNTER5_Q0_BUF
W274
AA274
BB274
W253
HH220
AA219
DD222
BB214
CC249
8NR
3NR
DLT
LE
D
Q
RESET
H257
K259
C241
L244
E246
MM241
V253
D259
F214
B212
L209
L211
EE214
DD212
JJ223
PP276
SCROLL_N4
ND34
N7
SCROLL_N5
G262
E271
B266
E239
D264
F266
G271
D266
G265
CC232
4AD
SCROLL_OUT7
N242
G249
L239
N238
T259
W255
G258
JJ246
F211
D214
H208
R203
GG226
HH223
PP223
RR227
SCROLL_N2
SCROLL_N3
N28
F239
H274
J218
M212
R276
V274
J269
N276
L265
BB259
FF244
KK245
DD250
HH238
GG244
AA261
EE244
RR271
PP271
PP216
RR215
DCLK18
RR221
RR230
RR276
SCROLL_N0
SCROLL_N1
ND31
PP264
NN243
KK225
FF261
EE218
MM238
PP259
FF237
JJ260

FILE NAME: 007121.pdsprj

DESIGN TITLE: Konami 007121
SCROLL BIT 7

BY: Sean Gonsalves **REV:** 0

DATE: 03/04/2021

PAGE: 34 of 52

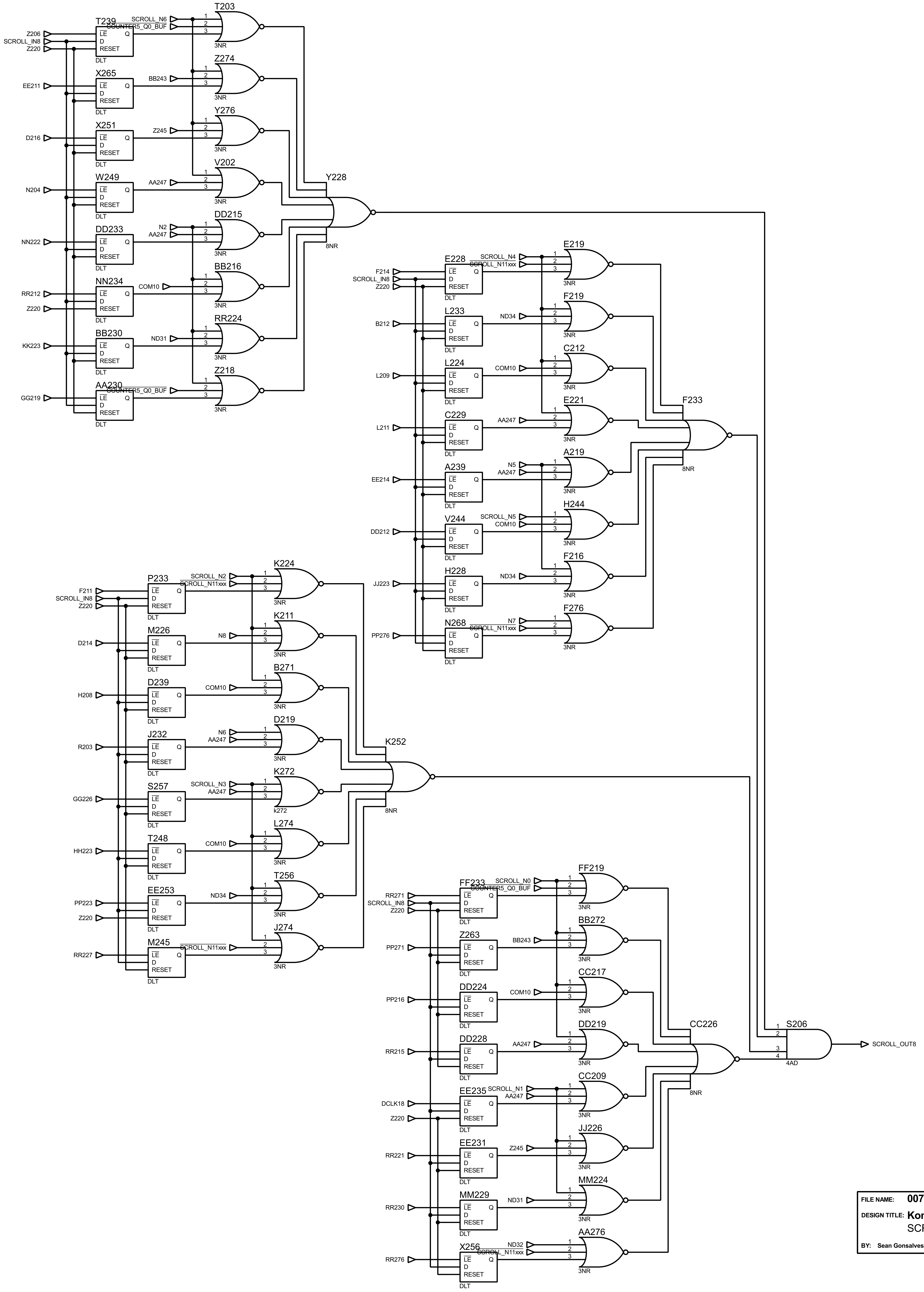
T239
Z206
SCROLL_IN8
Z220
SCROLL_N6
COUNTER5_Q0_BUF
T203
X265
EE211
BB243
Z274
X251
D216
Z245
Y276
W249
N204
AA247
V202
Y228
DD233
NN222
N2
AA247
DD215
NN234
RR212
Z220
COM10
BB216
BB230
KK223
ND31
RR224
AA230
GG219
COUNTER5_Q0_BUF
Z218
8NR
3NR
DLT
LE
D
RESET
Q
E228
F214
SCROLL_IN8
Z220
SCROLL_N4
SCROLL_N11xxx
E219
L233
B212
ND34
F219
L224
L209
COM10
C212
C229
L211
AA247
E221
F233
A239
EE214
N5
AA247
A219
V244
DD212
SCROLL_N5
COM10
H244
H228
JJ223
ND34
F216
N268
PP276
N7
SCROLL_N11xxx
F276
P233
F211
SCROLL_IN8
Z220
SCROLL_N2
SCROLL_N11xxx
K224
M226
D214
N8
K211
D239
H208
COM10
B271
J232
R203
N6
AA247
D219
K252
S257
GG226
SCROLL_N3
AA247
K272
k272
T248
HH223
COM10
L274
EE253
PP223
Z220
ND34
T256
M245
RR227
SCROLL_N11xxx
J274
FF233
RR271
SCROLL_IN8
Z220
SCROLL_N0
COUNTER5_Q0_BUF
FF219
Z263
PP271
BB243
BB272
DD224
PP216
COM10
CC217
DD228
RR215
AA247
DD219
CC226
S206
4AD
SCROLL_OUT8
EE235
DCLK18
Z220
SCROLL_N1
AA247
CC209
EE231
RR221
Z245
JJ226
MM229
RR230
ND31
MM224
X256
RR276
ND32
SCROLL_N11xxx
AA276

FILE NAME: **007121.pdsprj**
DESIGN TITLE: **Konami 007121**
SCROLL BIT 8
BY: Sean Gonsalves
REV: 0
DATE:
03/04/2021
PAGE:
35 of 52

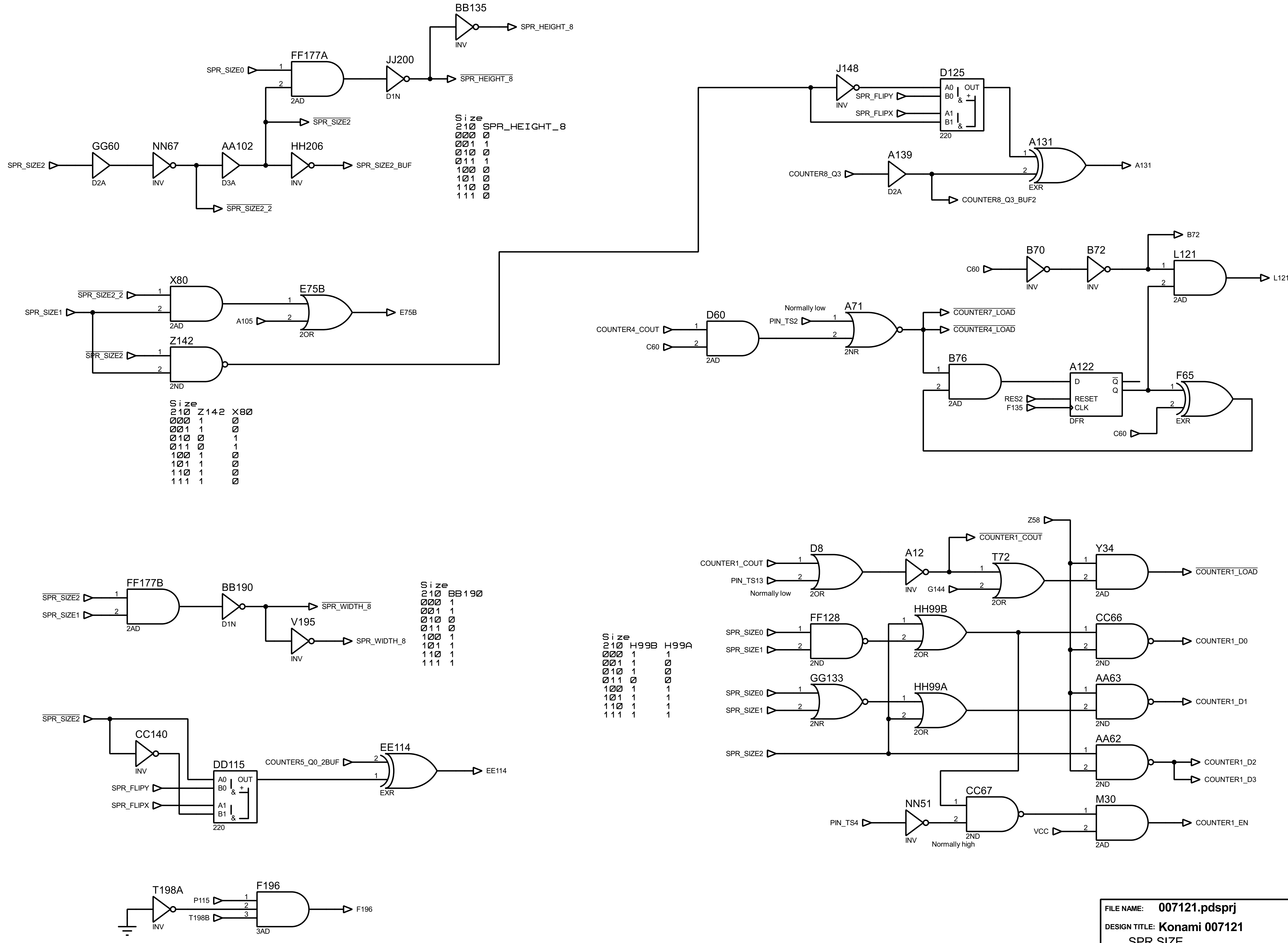
BB135
INV
SPR_HEIGHT_8
FF177A
2AD
SPR_SIZE0
JJ200
D1N
$\overline{\text{SPR\_HEIGHT\_8}}$
$\overline{\text{SPR\_SIZE2}}$
SPR_SIZE2
GG60
D2A
NN67
INV
AA102
D3A
HH206
INV
SPR_SIZE2_BUF
$\overline{\text{SPR\_SIZE2\_2}}$
J148
INV
D125
A0
B0
A1
B1
OUT
220
SPR_FLIPY
SPR_FLIPX
A131
EXR
A131
A139
D2A
COUNTER8_Q3
COUNTER8_Q3_BUF2
X80
2AD
E75B
2OR
E75B
A105
SPR_SIZE1
Z142
2ND
B70
B72
INV
C60
L121
2AD
L121
B72
D60
2AD
COUNTER4_COUT
C60
Normally low
PIN_TS2
A71
2NR
$\overline{\text{COUNTER7\_LOAD}}$
$\overline{\text{COUNTER4\_LOAD}}$
B76
2AD
A122
D
Q
RESET
CLK
DFR
RES2
F135
F65
EXR
C60
Z58
$\overline{\text{COUNTER1\_COUT}}$
D8
2OR
COUNTER1_COUT
PIN_TS13
Normally low
A12
INV
T72
2OR
G144
Y34
2AD
$\overline{\text{COUNTER1\_LOAD}}$
FF177B
2AD
$\overline{\text{SPR\_SIZE2}}$
SPR_SIZE1
BB190
D1N
$\overline{\text{SPR\_WIDTH\_8}}$
V195
INV
SPR_WIDTH_8
FF128
2ND
SPR_SIZE0
SPR_SIZE1
HH99B
2OR
CC66
2ND
COUNTER1_D0
GG133
2NR
HH99A
2OR
AA63
2ND
COUNTER1_D1
SPR_SIZE2
AA62
2ND
COUNTER1_D2
COUNTER1_D3
NN51
INV
PIN_TS4
CC67
2ND
Normally high
M30
2AD
VCC
COUNTER1_EN
CC140
INV
DD115
220
SPR_FLIPY
SPR_FLIPX
COUNTER5_Q0_2BUF
EE114
EXR
EE114
T198A
INV
F196
3AD
P115
T198B
F196

Size 210	SPR_HEIGHT_8
000	0
001	1
010	0
011	1
100	0
101	0
110	0
111	0

Size 210	Z142	X80
000	1	0
001	1	0
010	0	1
011	0	1
100	1	0
101	1	0
110	1	0
111	1	0

Size 210	BB190
000	1
001	1
010	0
011	0
100	1
101	1
110	1
111	1

Size 210	H99B	H99A
000	1	1
001	1	0
010	1	0
011	0	0
100	1	1
101	1	1
110	1	1
111	1	1

FILE NAME: **007121.pdsprj**
DESIGN TITLE: **Konami 007121**
SPR SIZE
BY: Sean Gonsalves
REV: 0
DATE: 03/04/2021
PAGE: 36 of 52
TIME: 00:06:09

Select between CPU, SPR, CPU, BG

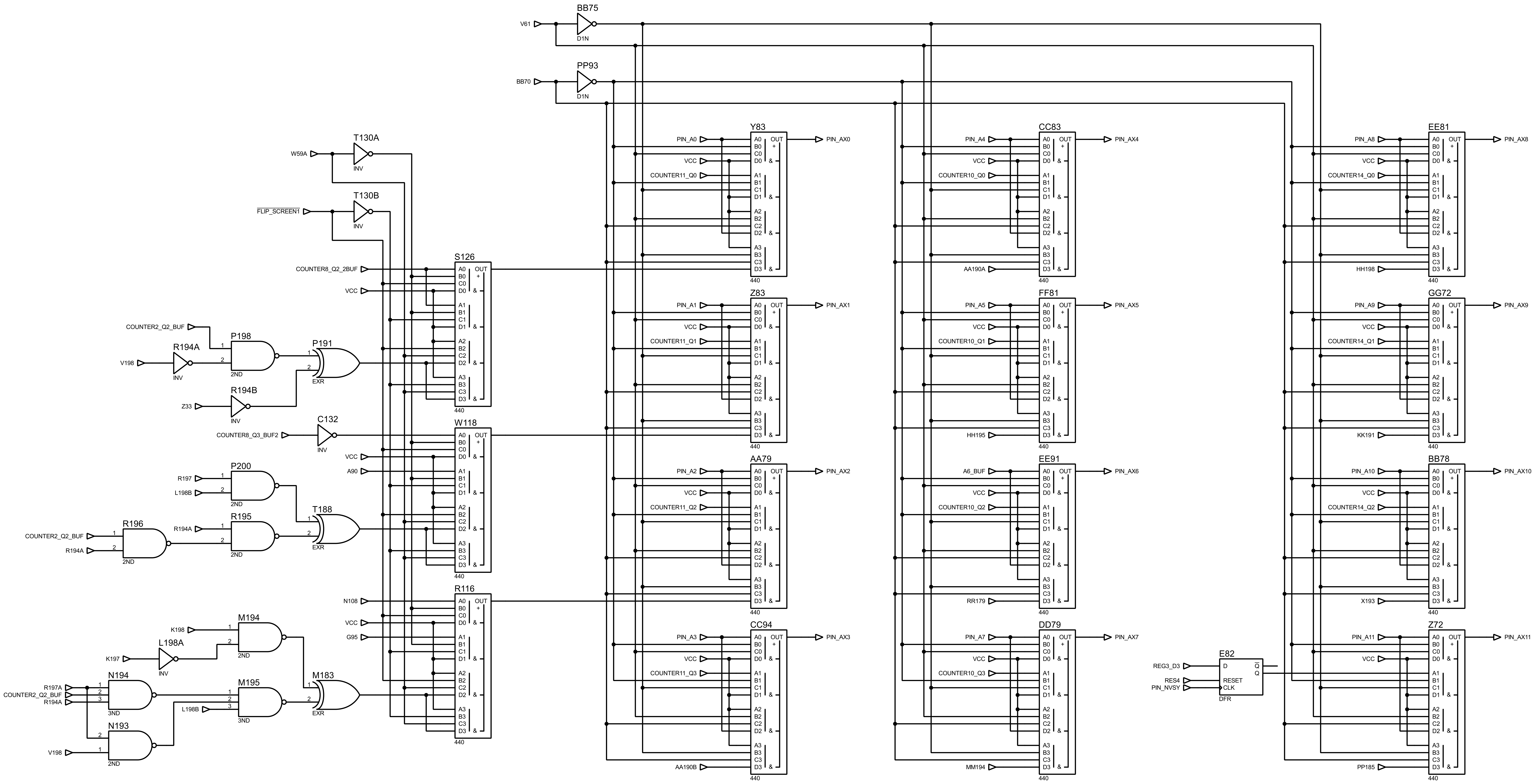

V61
BB75
D1N
BB70
PP93
D1N
W59A
T130A
INV
FLIP_SCREEN1
T130B
INV
COUNTER8_Q2_2BUF
VCC
S126
440
COUNTER2_Q2_BUF
R194A
V198
P198
2ND
P191
EXR
R194B
Z33
COUNTER8_Q3_BUF2
C132
INV
W118
A90
R197
L198B
P200
R196
COUNTER2_Q2_BUF
R194A
R195
T188
N108
G95
R116
K198
M194
L198A
K197
R197A
COUNTER2_Q2_BUF
R194A
N194
3ND
M195
L198B
M183
N193
V198
Y83
PIN_A0
PIN_AX0
COUNTER11_Q0
Z83
PIN_A1
PIN_AX1
COUNTER11_Q1
AA79
PIN_A2
PIN_AX2
COUNTER11_Q2
CC94
PIN_A3
PIN_AX3
COUNTER11_Q3
AA190B
CC83
PIN_A4
PIN_AX4
COUNTER10_Q0
AA190A
FF81
PIN_A5
PIN_AX5
COUNTER10_Q1
HH195
EE91
A6_BUF
PIN_AX6
COUNTER10_Q2
RR179
DD79
PIN_A7
PIN_AX7
COUNTER10_Q3
MM194
EE81
PIN_A8
PIN_AX8
COUNTER14_Q0
HH198
GG72
PIN_A9
PIN_AX9
COUNTER14_Q1
KK191
BB78
PIN_A10
PIN_AX10
COUNTER14_Q2
X193
Z72
PIN_A11
PIN_AX11
PP185
E82
REG3_D3
RES4
PIN_NVSY
DFR

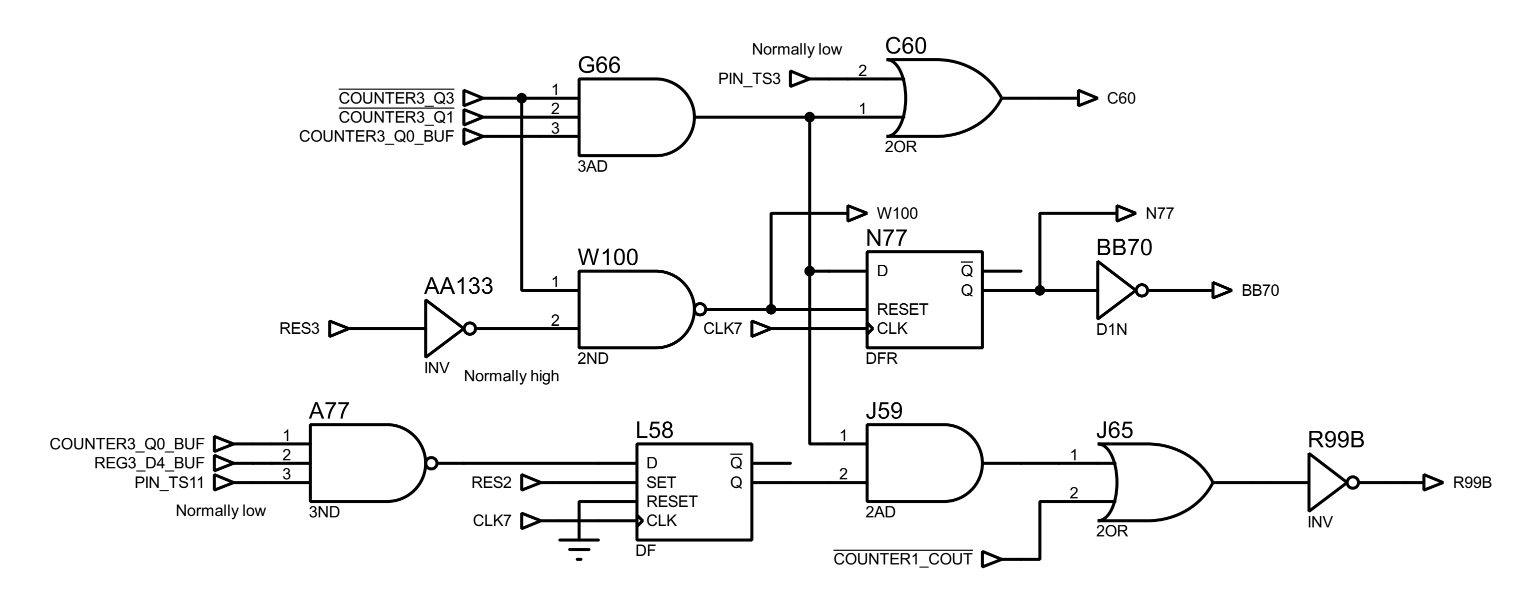

COUNTER3_Q3
COUNTER3_Q1
COUNTER3_Q0_BUF
G66
3AD
Normally low
PIN_TS3
C60
2OR
C60
W100
N77
N77
BB70
D1N
BB70
RES3
AA133
INV
Normally high
W100
2ND
CLK7
DFR
COUNTER3_Q0_BUF
REG3_D4_BUF
PIN_TS11
Normally low
A77
3ND
RES2
CLK7
L58
DF
J59
2AD
J65
2OR
COUNTER1_COUT
R99B
INV
R99B

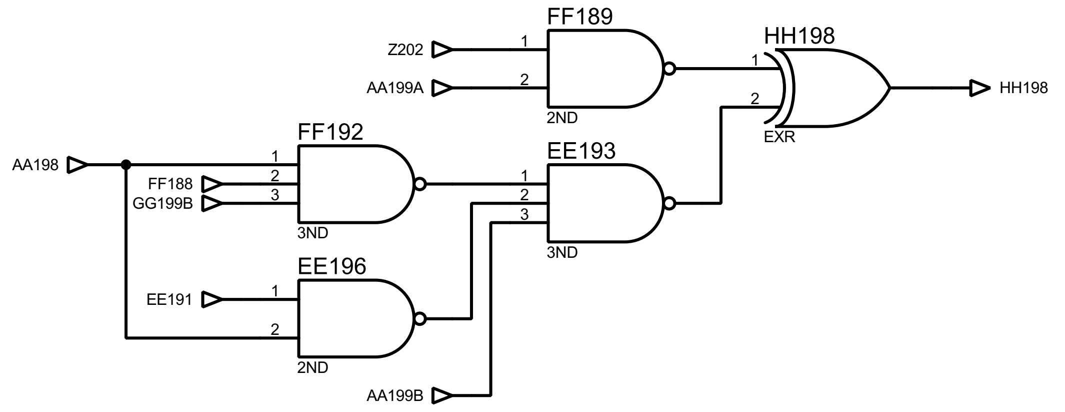

Z202
AA199A
FF189
2ND
HH198
EXR
HH198
AA198
FF188
GG199B
FF192
3ND
EE193
3ND
EE191
EE196
2ND
AA199B

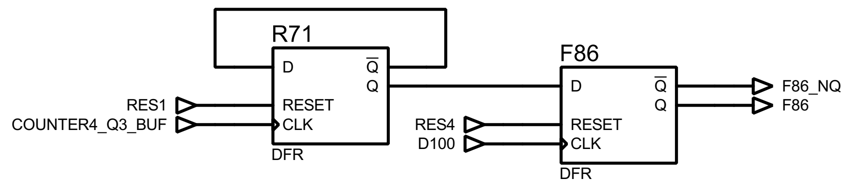

R71
RES1
COUNTER4_Q3_BUF
DFR
F86
RES4
D100
DFR
F86_NQ
F86

FILE NAME: 007121.pdsprj
DESIGN TITLE: Konami 007121
SRAM ADDRESS
BY: Sean Gonsalves
REV: 0
DATE: 03/04/2021
PAGE: 37 of 52

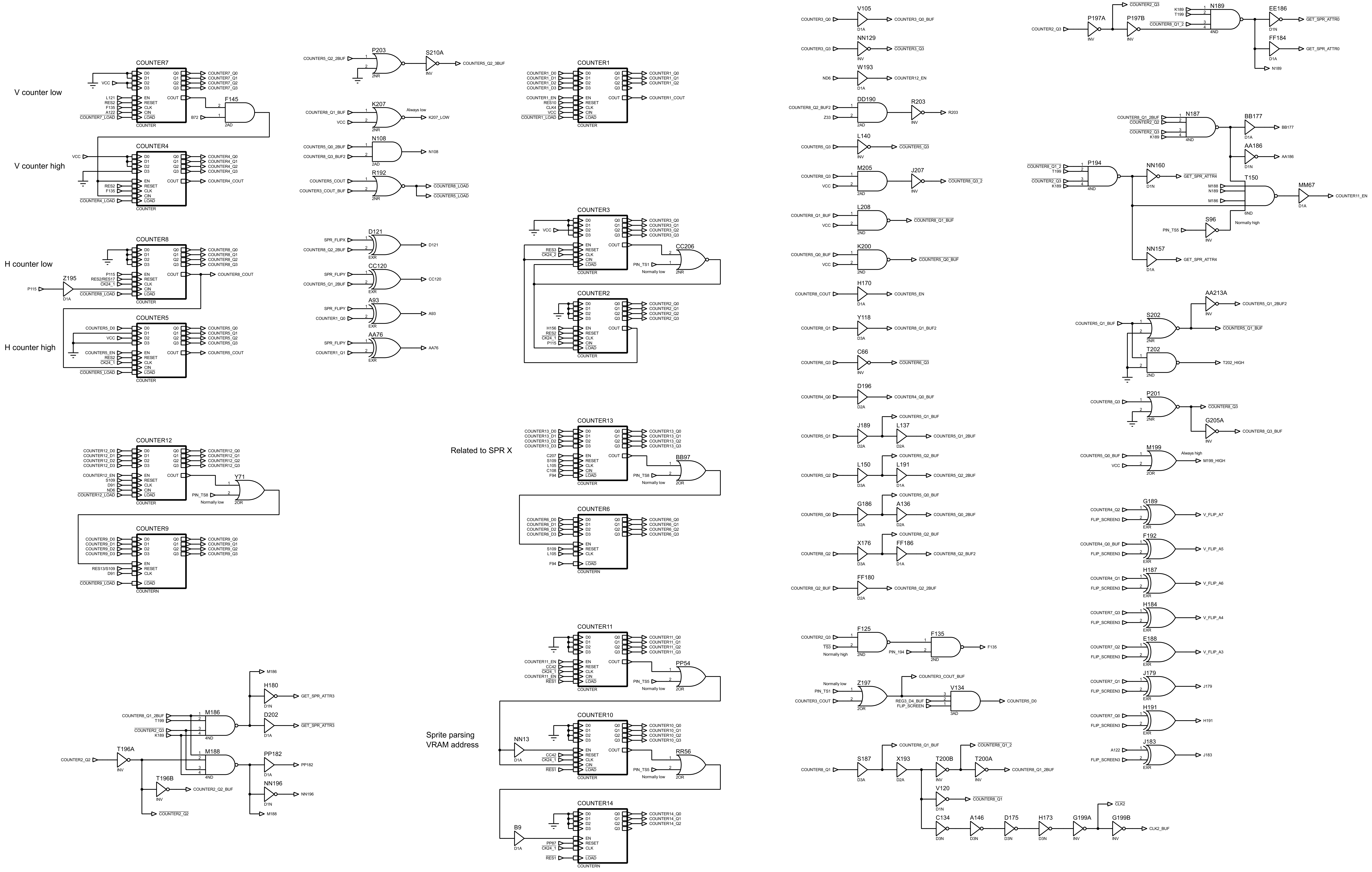
V counter low
V counter high
H counter low
H counter high
Related to SPR X
Sprite parsing
VRAM address
COUNTER7
COUNTER4
COUNTER8
COUNTER5
COUNTER12
COUNTER9
COUNTER1
COUNTER3
COUNTER2
COUNTER13
COUNTER6
COUNTER11
COUNTER10
COUNTER14
Z195
F145
Y71
M186
M188
T196A
T196B
H180
D202
PP182
NN196
P203
S210A
K207
Always low
N108
R192
D121
CC120
A93
AA76
CC206
Normally low
BB97
PP54
RR56
NN13
B9
V105
NN129
W193
DD190
R203
L140
M205
J207
L208
K200
H170
Y118
C66
D196
J189
L137
L150
L191
G186
A136
X176
FF186
FF180
F125
F135
Normally high
Z197
V134
S187
X193
T200B
T200A
V120
C134
A146
D175
H173
G199A
G199B
CLK2_BUF
P197A
P197B
N189
EE186
FF184
GET_SPR_ATTR0
N187
BB177
AA186
P194
NN160
T150
MM67
COUNTER11_EN
S96
NN157
AA213A
S202
T202
P201
G205A
M199
G189
F192
H187
H184
E188
J179
H191
J183
V_FLIP_A7
V_FLIP_A5
V_FLIP_A6
V_FLIP_A4
V_FLIP_A3

FILE NAME: 007121.pdsprj
DESIGN TITLE: Konami 007121
COUNTERS
BY: Sean Gonsalves
REV: 0
DATE: 03/04/2021
PAGE: 38 of 52
TIME: 00:06:09

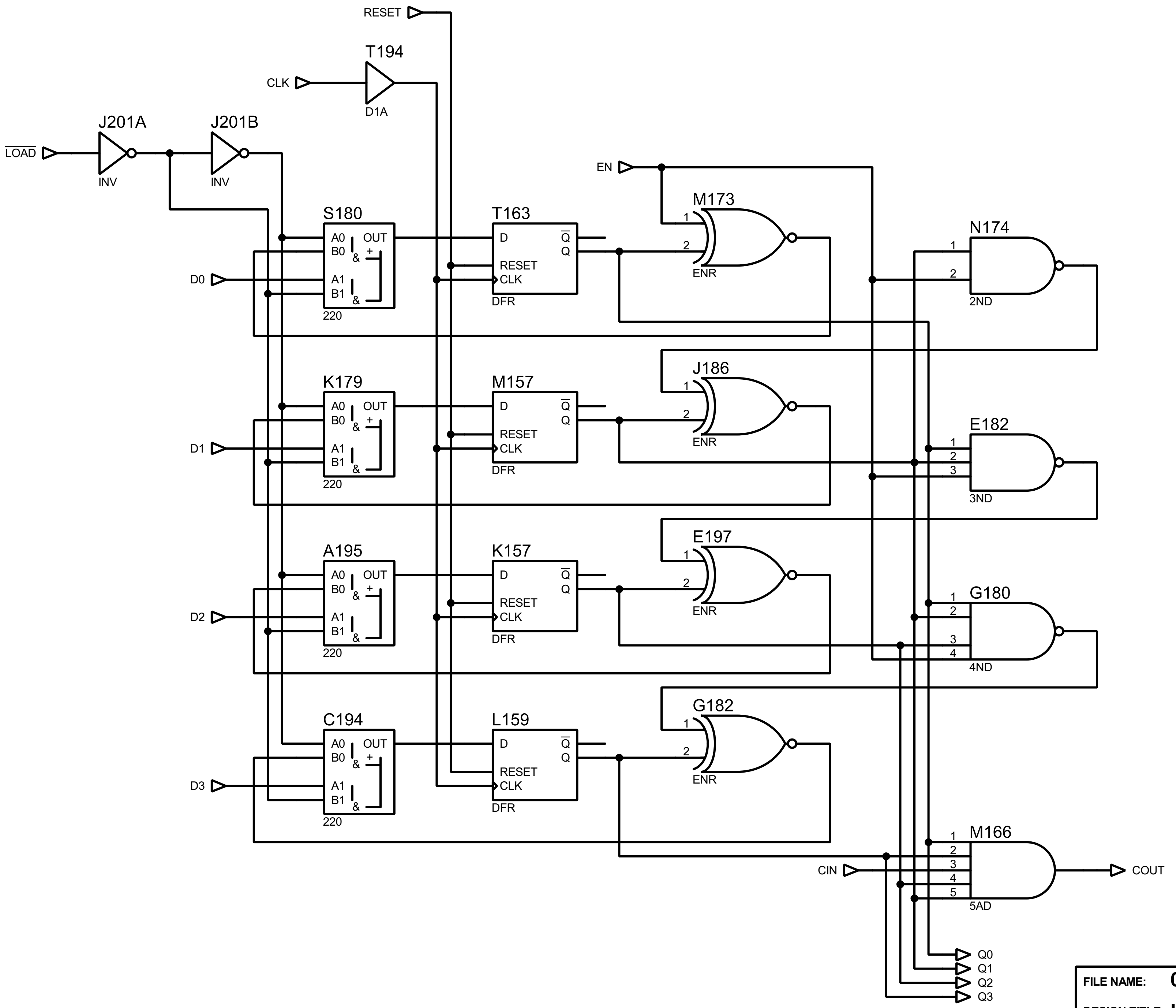
RESET
CLK
T194
D1A
$\overline{\text{LOAD}}$
J201A
INV
J201B
INV
EN
S180
A0
B0
A1
B1
OUT
220
D0
T163
D
RESET
CLK
$\overline{\text{Q}}$
Q
DFR
M173
ENR
N174
2ND
K179
D1
M157
J186
E182
3ND
A195
D2
K157
E197
G180
4ND
C194
D3
L159
G182
M166
5AD
CIN
COUT
Q0
Q1
Q2
Q3

FILE NAME: 007121.pdsprj

DESIGN TITLE: Konami 007121

COUNTER5

BY: Sean Gonsalves **REV:** 0

DATE: 03/04/2021

PAGE: 39 of 52

TIME: 00:06:09

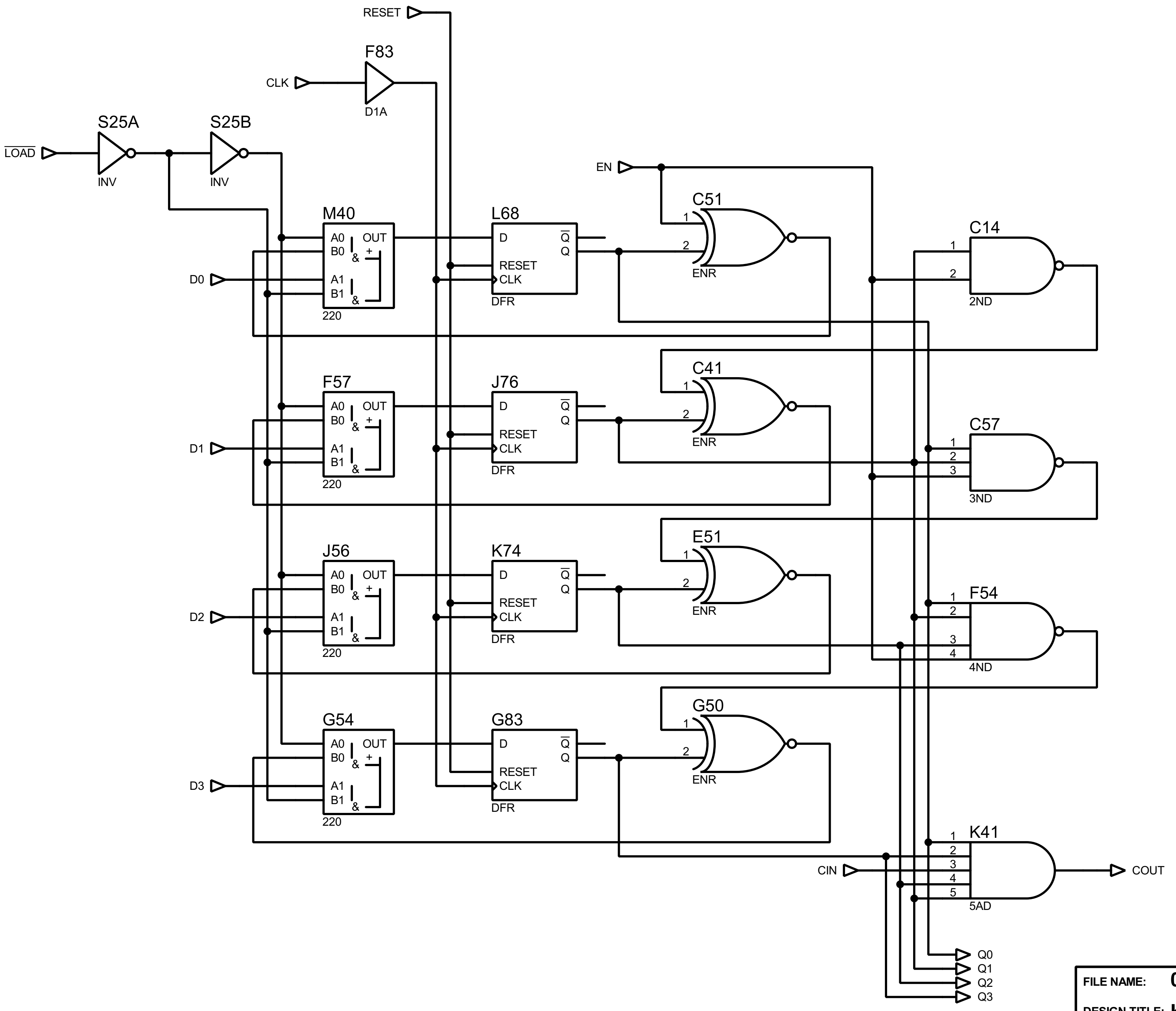
RESET
F83
CLK
D1A
S25A
S25B
LOAD
INV
INV
EN
M40
L68
C51
C14
D0
A0 B0 A1 B1 OUT & + &
220
D Q̅ Q RESET CLK
DFR
ENR
2ND
F57
J76
C41
C57
D1
3ND
J56
K74
E51
F54
D2
4ND
G54
G83
G50
D3
K41
5AD
CIN
COUT
Q0
Q1
Q2
Q3
1
2
3
4
5

FILE NAME: **007121.pdsprj**

DESIGN TITLE: **Konami 007121**

COUNTER1

BY: Sean Gonsalves

REV: 0

DATE: 03/04/2021

PAGE: 40 of 52

TIME: 00:06:09

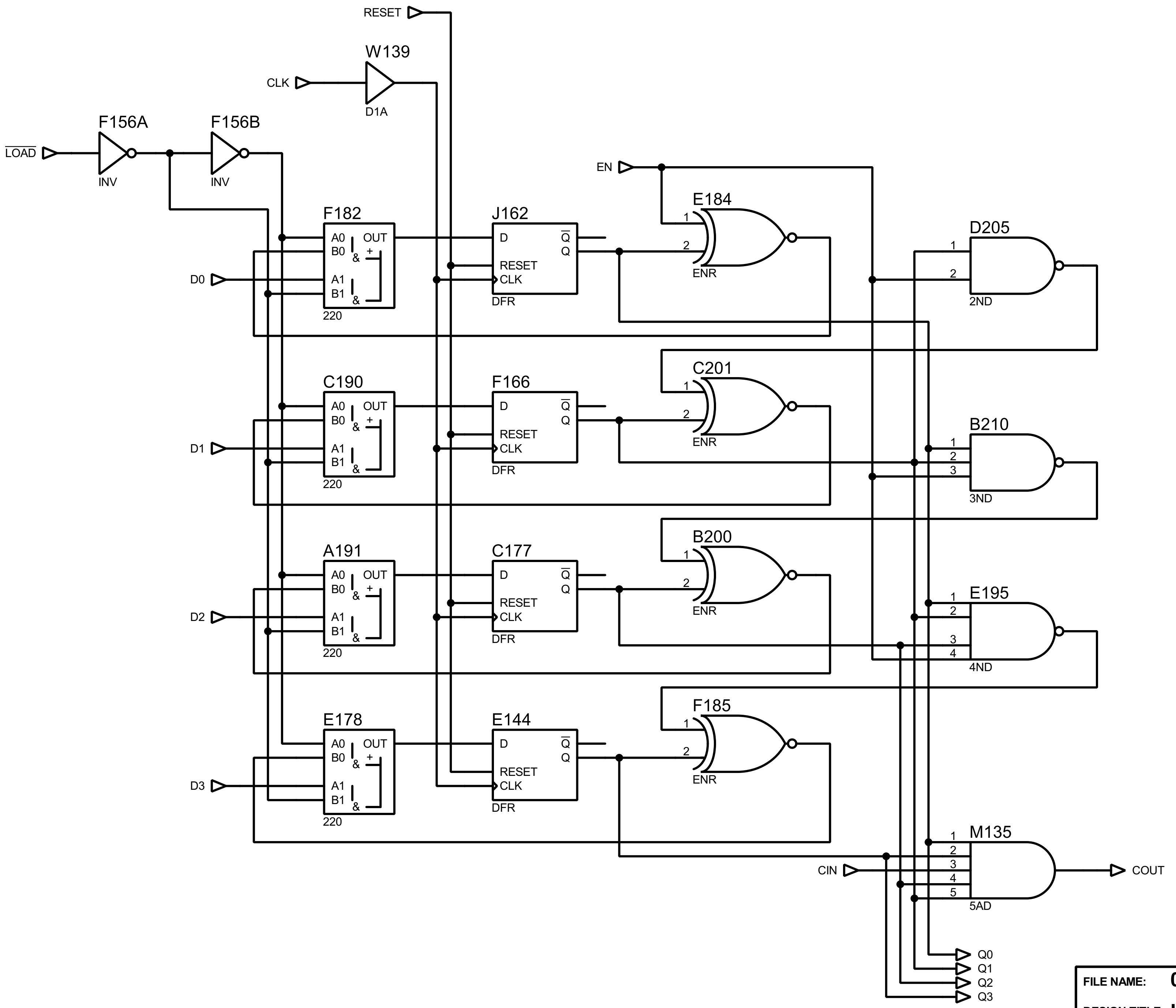
RESET
W139
CLK
D1A
F156A
F156B
$\overline{\text{LOAD}}$
INV
INV
EN
E184
F182
J162
D205
A0
B0
OUT
&
+
A1
B1
&
220
D
$\overline{\text{Q}}$
Q
RESET
CLK
DFR
1
2
ENR
2ND
D0
C190
F166
C201
B210
A0
B0
OUT
A1
B1
220
D
$\overline{\text{Q}}$
Q
RESET
CLK
DFR
ENR
1
2
3
3ND
D1
A191
C177
B200
A0
B0
OUT
A1
B1
220
D
$\overline{\text{Q}}$
Q
RESET
CLK
DFR
ENR
E195
1
2
3
4
4ND
D2
E178
E144
F185
A0
B0
OUT
A1
B1
220
D
$\overline{\text{Q}}$
Q
RESET
CLK
DFR
ENR
D3
M135
1
2
3
4
5
5AD
CIN
COUT
Q0
Q1
Q2
Q3

FILE NAME: 007121.pdsprj

DESIGN TITLE: Konami 007121

COUNTER4

BY: Sean Gonsalves

REV: 0

DATE: 03/04/2021

PAGE: 41 of 52

TIME: 00:06:09

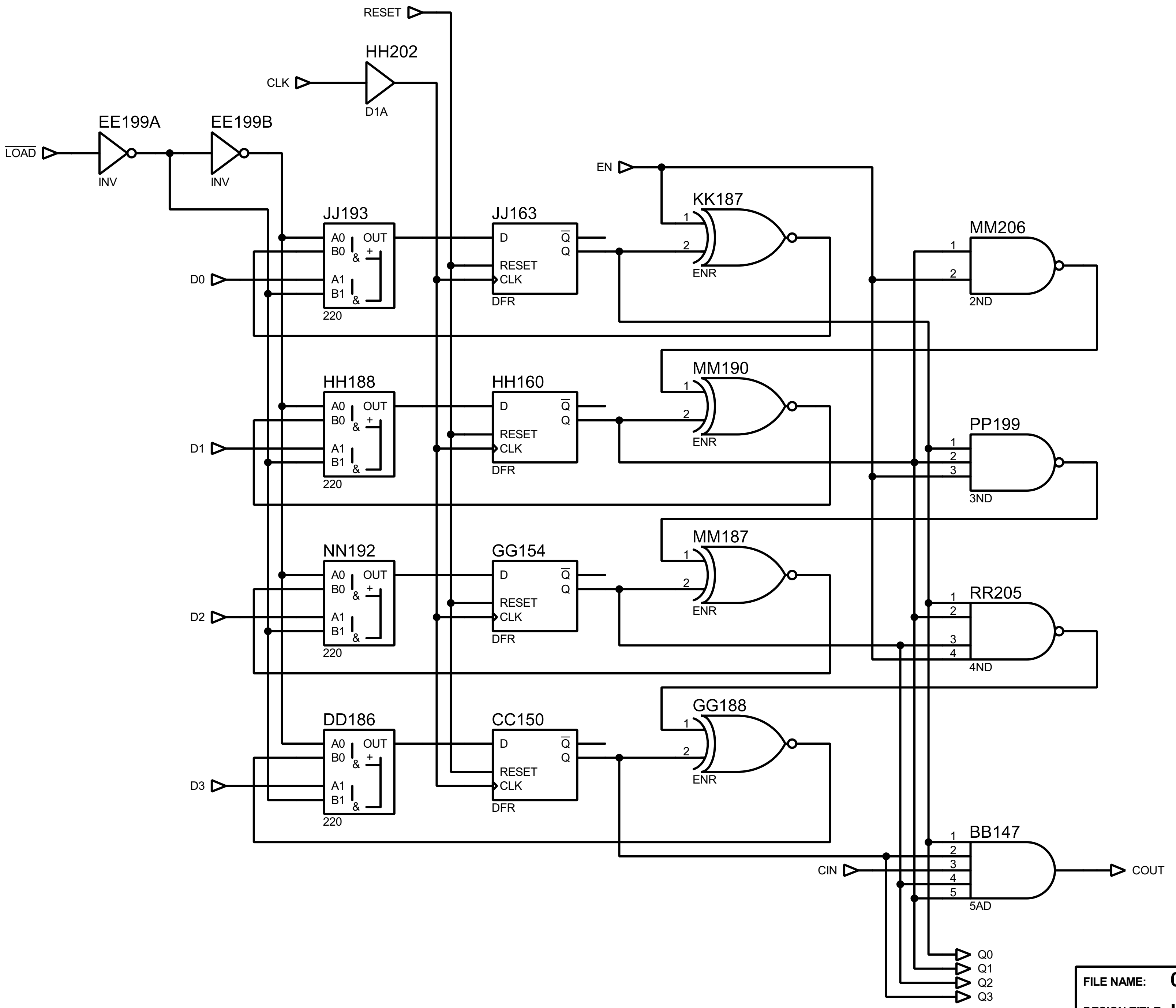
RESET
CLK
HH202
D1A
LOAD
EE199A
EE199B
INV
INV
EN
KK187
ENR
MM206
2ND
JJ193
A0
B0
A1
B1
OUT
&
+
220
JJ163
D
RESET
CLK
Q
Q
DFR
D0
HH188
HH160
MM190
PP199
3ND
D1
NN192
GG154
MM187
RR205
4ND
D2
DD186
CC150
GG188
D3
BB147
5AD
CIN
COUT
Q0
Q1
Q2
Q3

FILE NAME: **007121.pdsprj**
DESIGN TITLE: **Konami 007121**
COUNTER3
BY: Sean Gonsalves
REV: 0
DATE:
03/04/2021
PAGE:
42 of 52
TIME: 00:06:09

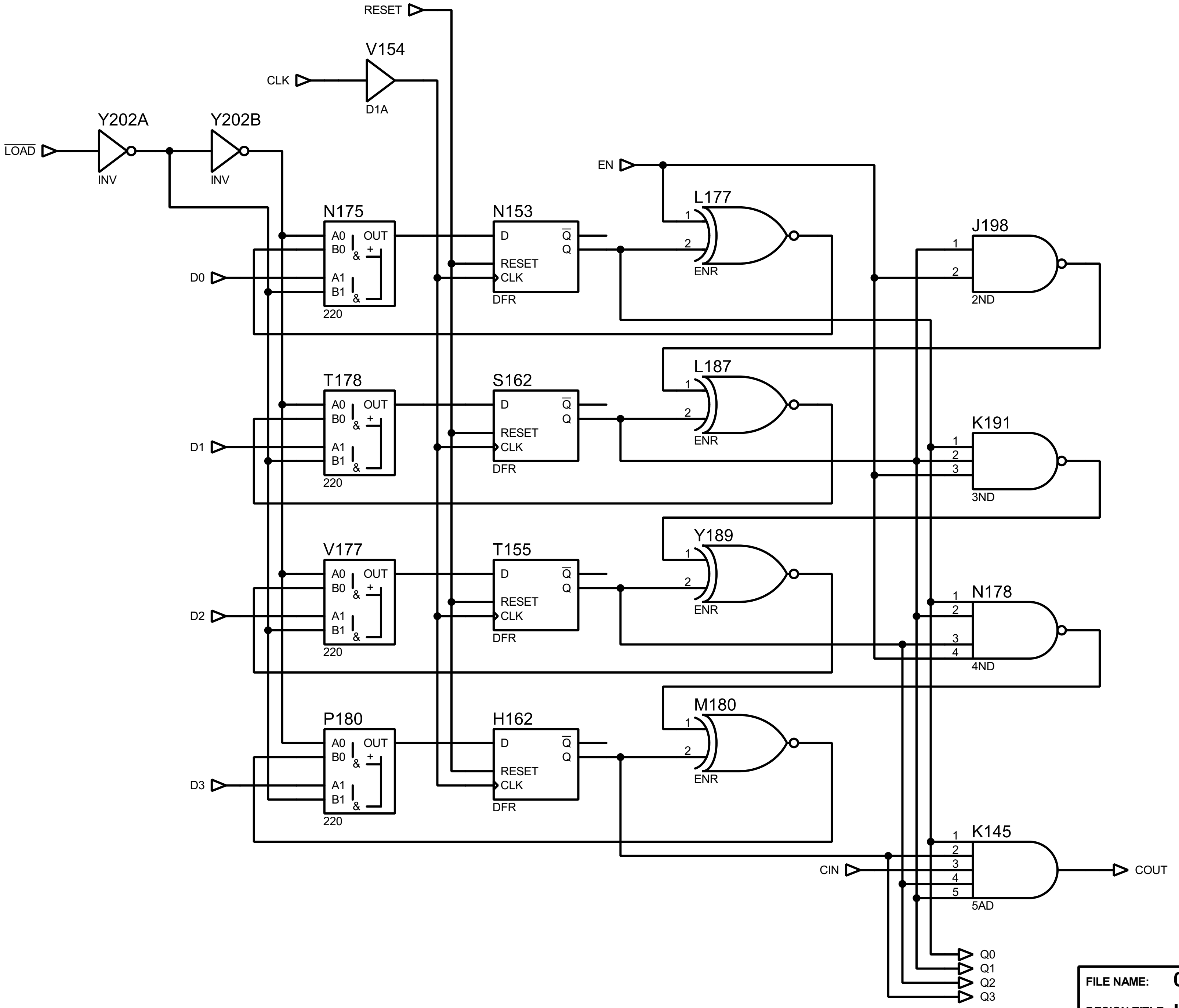
RESET
CLK
V154
D1A
LOAD
Y202A
INV
Y202B
INV
EN
N175
A0
B0
A1
B1
OUT
220
N153
D
RESET
CLK
Q
Q
DFR
L177
ENR
J198
2ND
D0
T178
220
S162
DFR
L187
ENR
K191
3ND
D1
V177
220
T155
DFR
Y189
ENR
N178
4ND
D2
P180
220
H162
DFR
M180
ENR
D3
K145
5AD
CIN
COUT
Q0
Q1
Q2
Q3

FILE NAME: **007121.pdsprj**

DESIGN TITLE: **Konami 007121**

COUNTER2

BY: Sean Gonsalves

REV: 0

DATE:

03/04/2021

PAGE:

43 of 52

TIME: 00:06:09

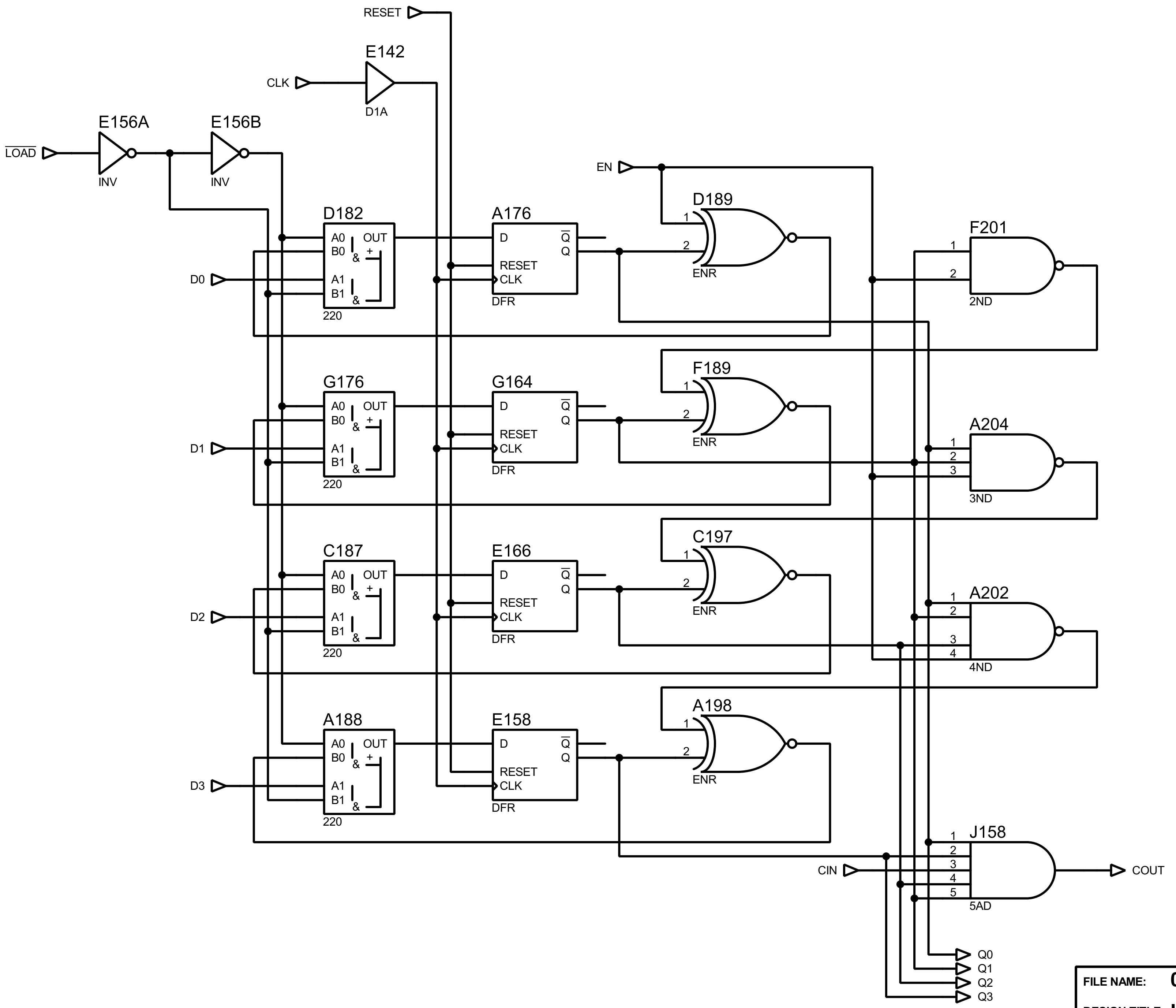
RESET
E142
CLK
D1A
E156A
E156B
LOAD
INV
INV
EN
D189
F201
D182
A176
A0
B0
OUT
A1
B1
&
+
220
D
RESET
CLK
DFR
Q
ENR
1
2
2ND
D0
G176
G164
F189
A204
3
3ND
D1
C187
E166
C197
A202
4
4ND
D2
A188
E158
A198
D3
J158
5
5AD
CIN
COUT
Q0
Q1
Q2
Q3

FILE NAME: **007121.pdsprj**

DESIGN TITLE: **Konami 007121**
COUNTER7

BY: Sean Gonsalves
REV: 0

DATE:
03/04/2021

PAGE:
44 of 52

TIME: 00:06:09

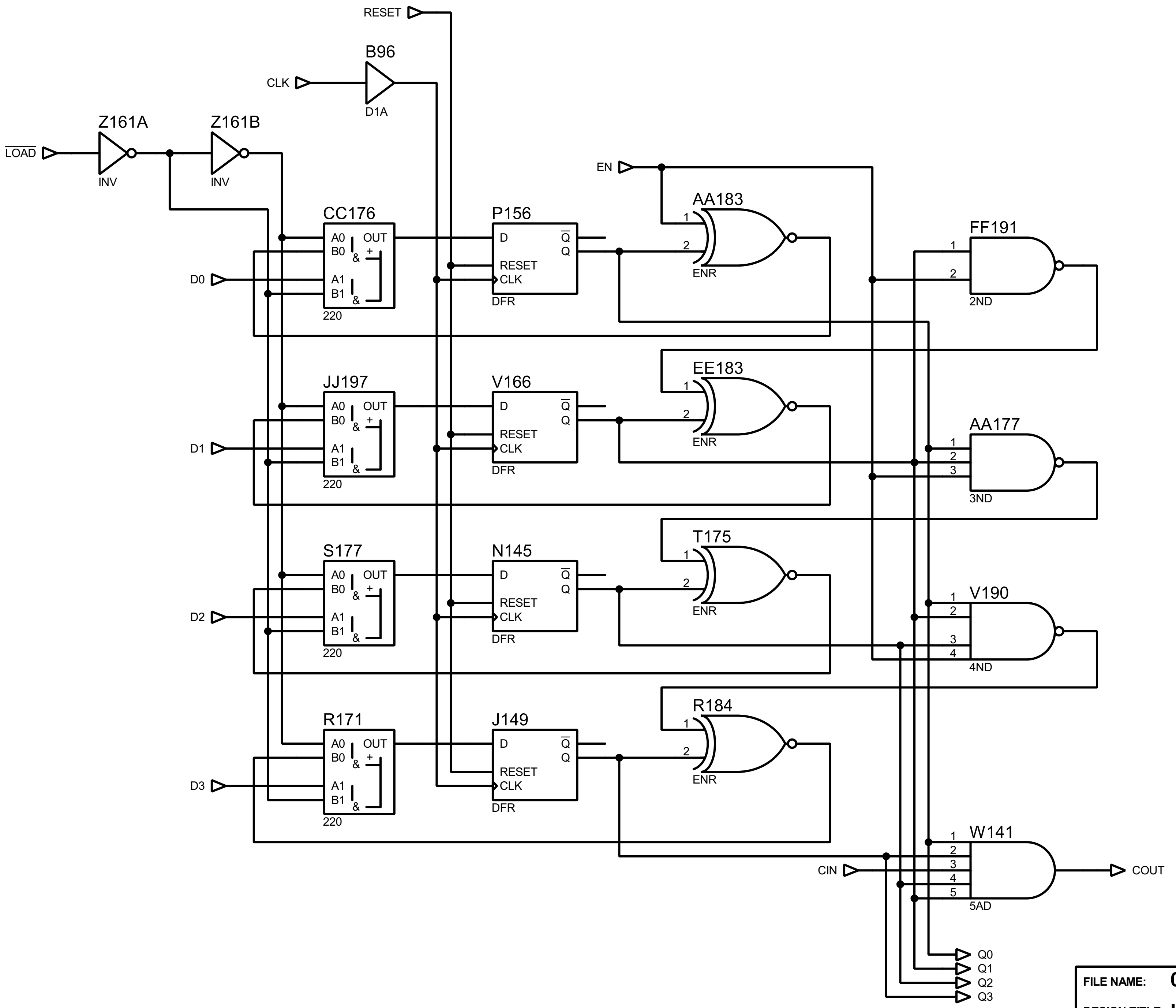
RESET
B96
CLK
D1A
Z161A
Z161B
LOAD
INV
INV
EN
CC176
P156
AA183
FF191
A0
B0
A1
B1
OUT
&
+
220
D
RESET
CLK
Q̅
Q
DFR
ENR
2ND
D0
JJ197
V166
EE183
AA177
3ND
D1
S177
N145
T175
V190
4ND
D2
R171
J149
R184
W141
5AD
D3
CIN
COUT
Q0
Q1
Q2
Q3
1
2
3
4
5

FILE NAME: **007121.pdsprj**

DESIGN TITLE: **Konami 007121**

COUNTER12

BY: Sean Gonsalves

REV: 0

DATE: **03/04/2021**

PAGE: 45 of 52

TIME: 00:06:09

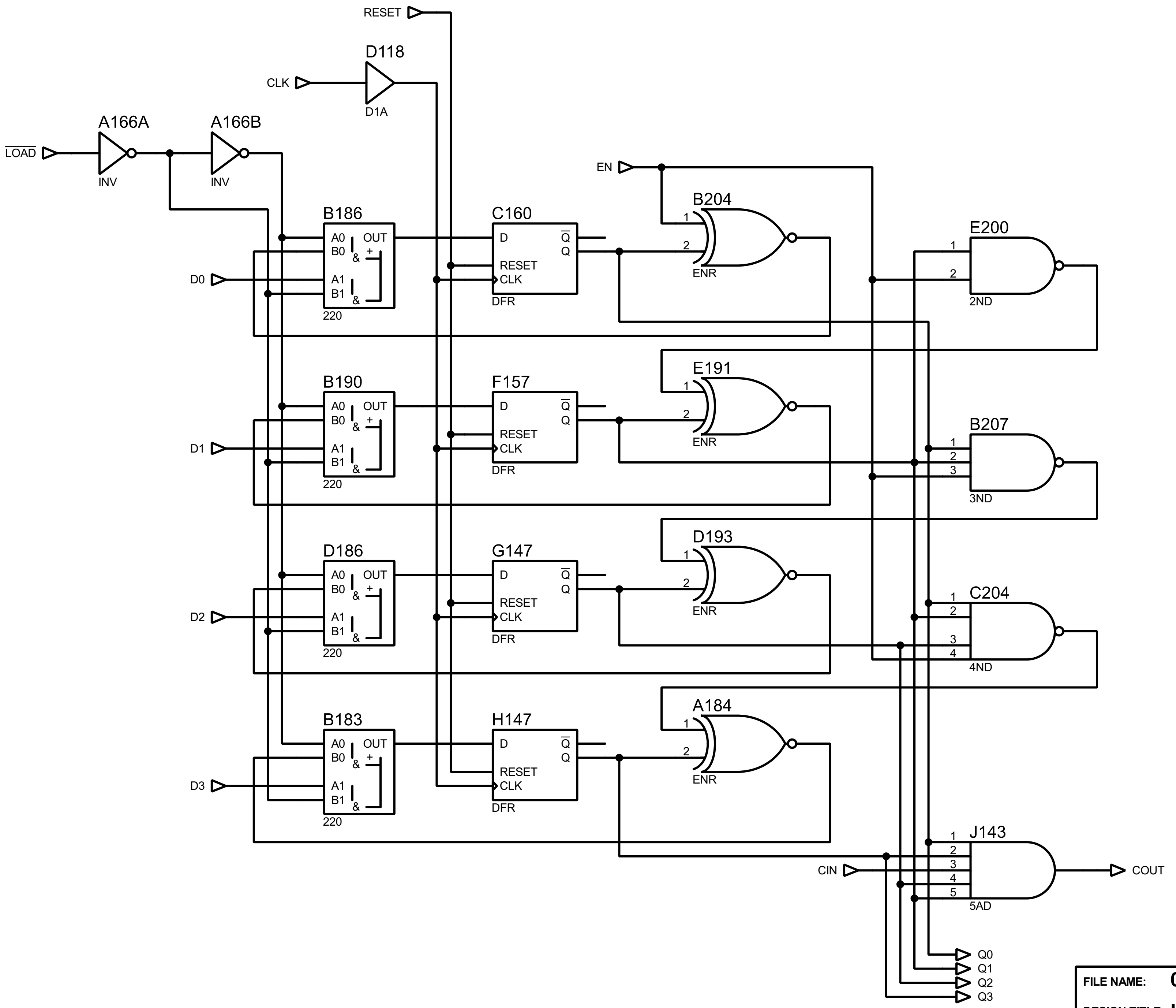
RESET
CLK
D118
D1A
LOAD
A166A
INV
A166B
INV
EN
B186
220
C160
DFR
B204
ENR
E200
2ND
D0
B190
220
F157
DFR
E191
ENR
B207
3ND
D1
D186
220
G147
DFR
D193
ENR
C204
4ND
D2
B183
220
H147
DFR
A184
ENR
D3
J143
5AD
CIN
COUT
A0
B0
A1
B1
OUT
&
+
D
RESET
CLK
Q
Q̄
1
2
3
4
5
Q0
Q1
Q2
Q3

FILE NAME: **007121.pdsprj**

DESIGN TITLE: **Konami 007121**
COUNTER13

BY: **Sean Gonsalves**

REV: **0**

DATE:
03/04/2021

PAGE:
46 of 52

TIME: **00:06:09**

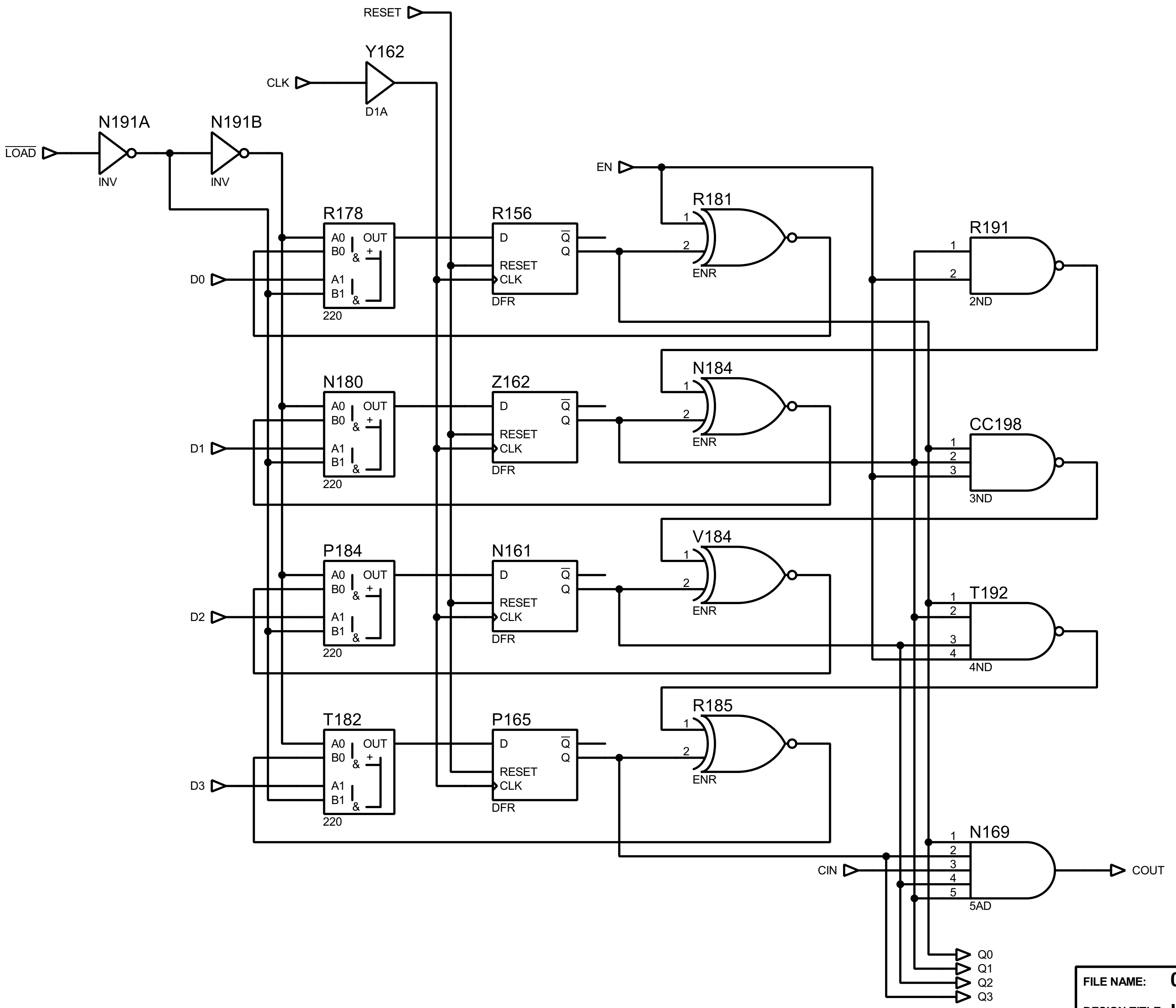
RESET
Y162
CLK
D1A
N191A
N191B
LOAD
INV
INV
EN
R181
R178
R156
R191
A0
B0
A1
B1
OUT
+
&
220
D
RESET
CLK
Q̅
Q
DFR
1
2
ENR
2ND
D0
N180
Z162
N184
CC198
3ND
D1
P184
N161
V184
T192
4ND
D2
T182
P165
R185
N169
5AD
D3
CIN
COUT
1
2
3
4
5
Q0
Q1
Q2
Q3

FILE NAME: **007121.pdsprj**

DESIGN TITLE: **Konami 007121**

COUNTER8

BY: Sean Gonsalves

REV: 0

DATE:

03/04/2021

PAGE:

47 of 52

TIME: 00:06:09

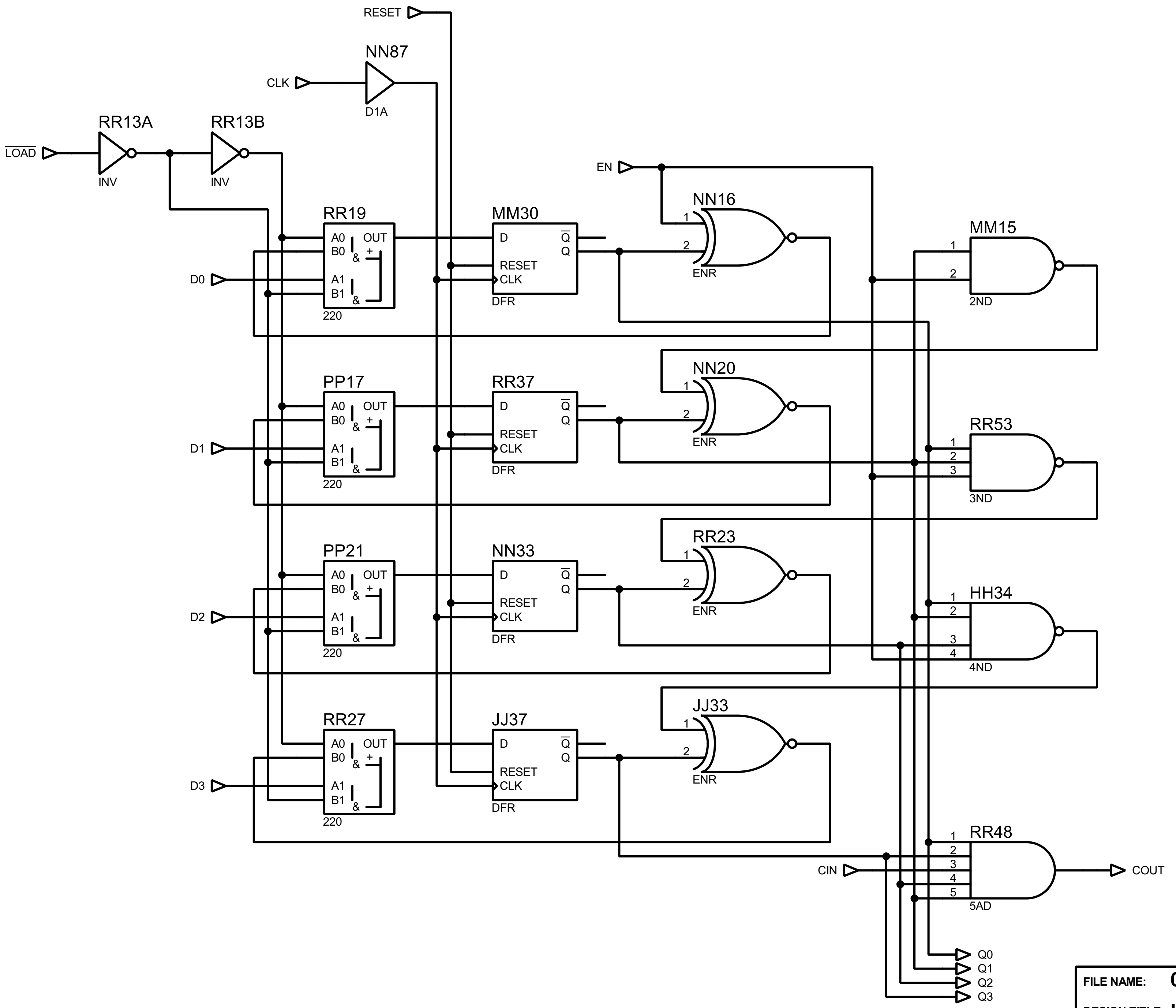
RESET
NN87
CLK
D1A
RR13A
RR13B
LOAD
INV
INV
EN
NN16
1
2
ENR
MM15
1
2
2ND
RR19
A0
B0
A1
B1
OUT
&
+
&
220
MM30
D
RESET
CLK
Q̅
Q
DFR
D0
PP17
A0
B0
A1
B1
OUT
&
+
&
220
RR37
D
RESET
CLK
Q̅
Q
DFR
D1
NN20
1
2
ENR
RR53
1
2
3
3ND
PP21
A0
B0
A1
B1
OUT
&
+
&
220
NN33
D
RESET
CLK
Q̅
Q
DFR
D2
RR23
1
2
ENR
HH34
1
2
3
4
4ND
RR27
A0
B0
A1
B1
OUT
&
+
&
220
JJ37
D
RESET
CLK
Q̅
Q
DFR
D3
JJ33
1
2
ENR
RR48
1
2
3
4
5
5AD
CIN
COUT
Q0
Q1
Q2
Q3

FILE NAME: **007121.pdsprj**

DESIGN TITLE: **Konami 007121**
COUNTER10

BY: Sean Gonsalves
REV: 0

DATE:
03/04/2021

PAGE:
48 of 52

TIME: 00:06:09

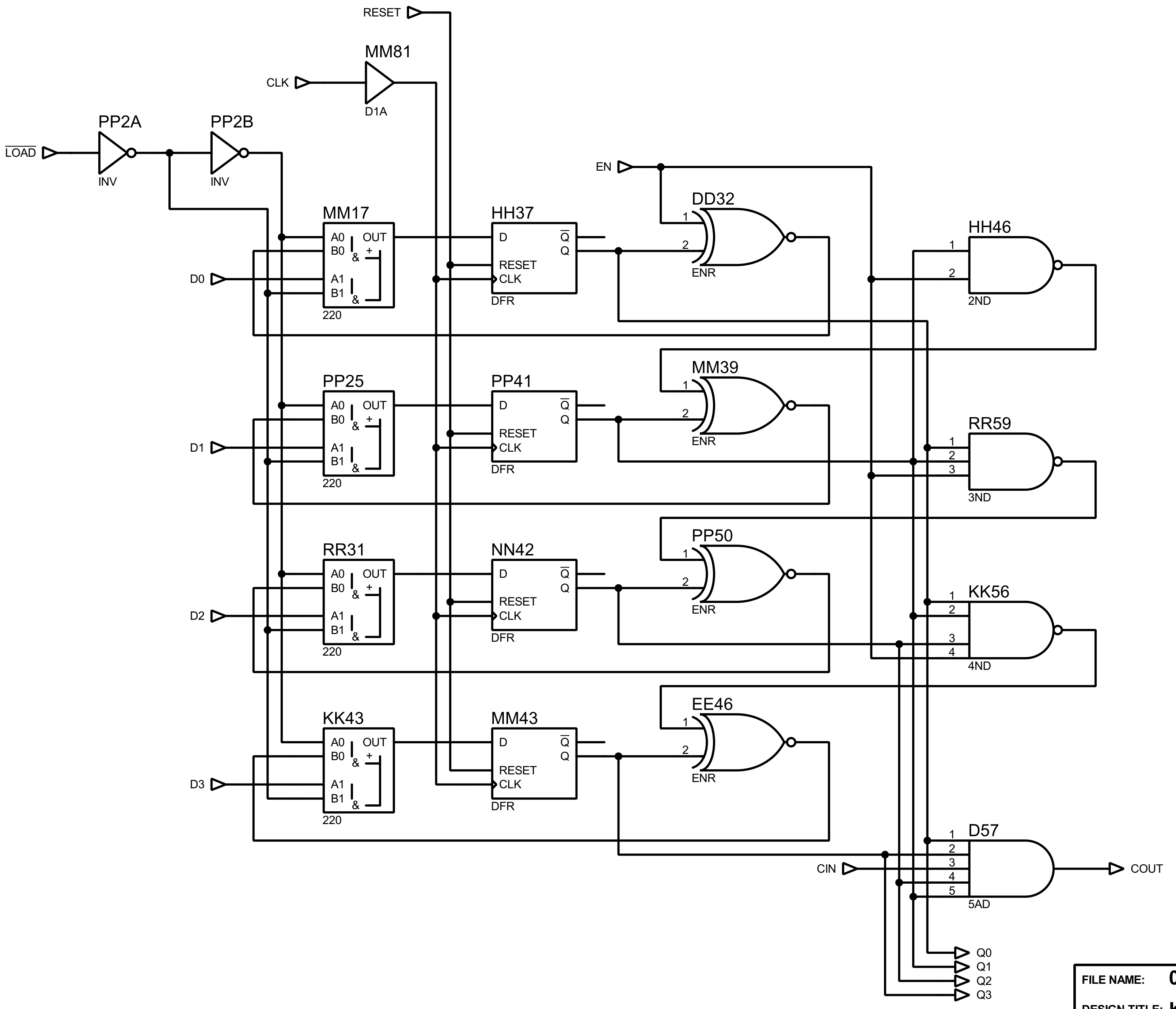
RESET
CLK
MM81
D1A
LOAD
PP2A
INV
PP2B
INV
EN
MM17
A0
B0
A1
B1
OUT
&
+
220
HH37
D
Q
RESET
CLK
DFR
DD32
1
2
ENR
HH46
2ND
D0
PP25
PP41
MM39
RR59
3ND
D1
RR31
NN42
PP50
KK56
4ND
D2
KK43
MM43
EE46
D3
D57
5AD
CIN
COUT
Q0
Q1
Q2
Q3

FILE NAME: **007121.pdsprj**
DESIGN TITLE: **Konami 007121**
COUNTER11
BY: **Sean Gonsalves** **REV:** **0**

DATE:
03/04/2021
PAGE:
49 of 52
TIME: **00:06:09**

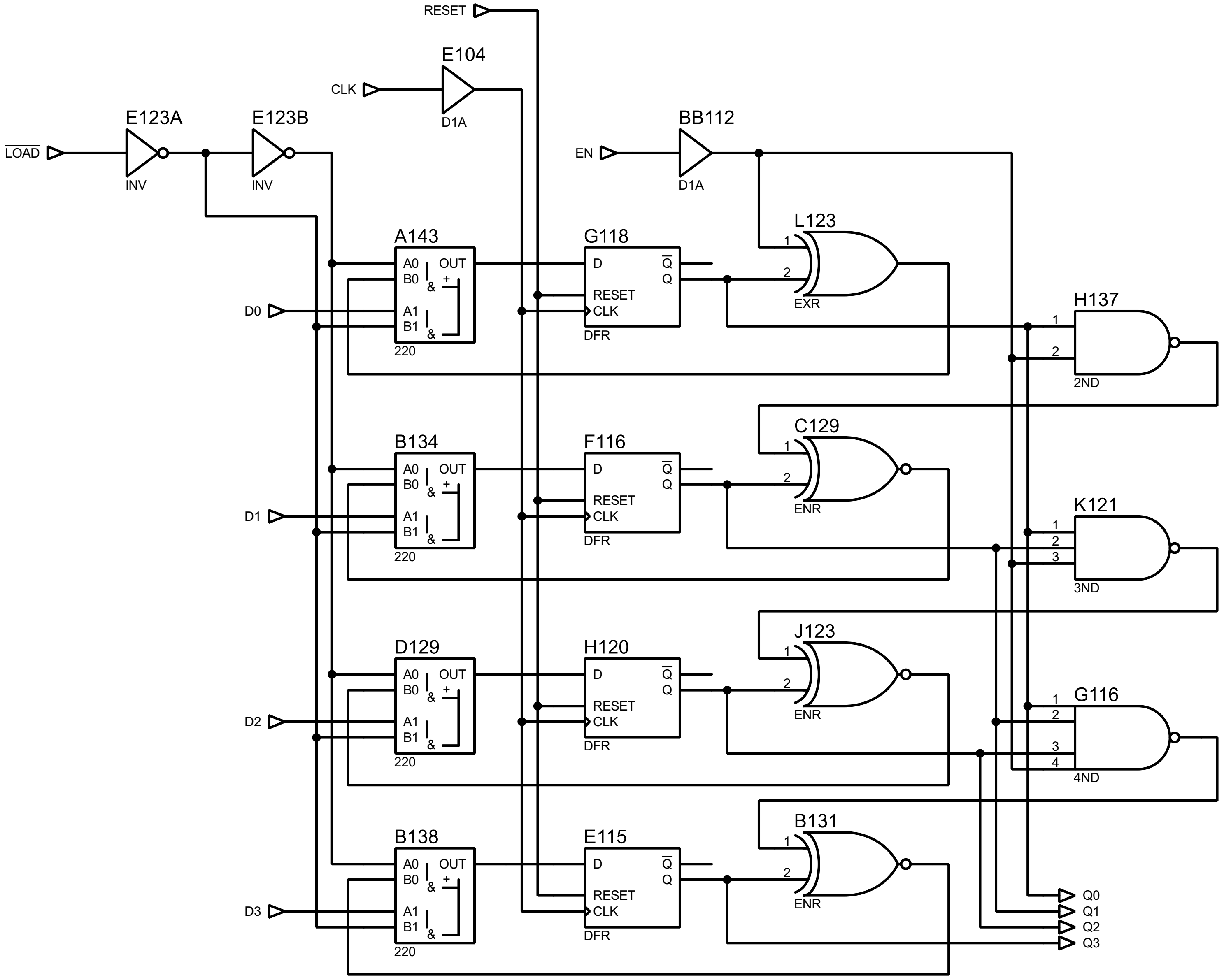
RESET
E104
CLK
D1A
E123A
E123B
BB112
LOAD
INV
INV
EN
D1A
A143
G118
L123
A0 B0 OUT + &
A1 B1 &
D Q̅ Q
RESET
CLK
DFR
1
2
EXR
D0
220
H137
1
2
2ND
B134
F116
C129
ENR
D1
K121
1 2 3
3ND
D129
H120
J123
ENR
D2
G116
1 2 3 4
4ND
B138
E115
B131
ENR
D3
Q0
Q1
Q2
Q3

FILE NAME: **007121.pdsprj**

DESIGN TITLE: **Konami 007121**

COUNTER6

BY: **Sean Gonsalves** **REV:** **0**

DATE:

03/04/2021

PAGE:

50 of 52

TIME: **00:06:09**

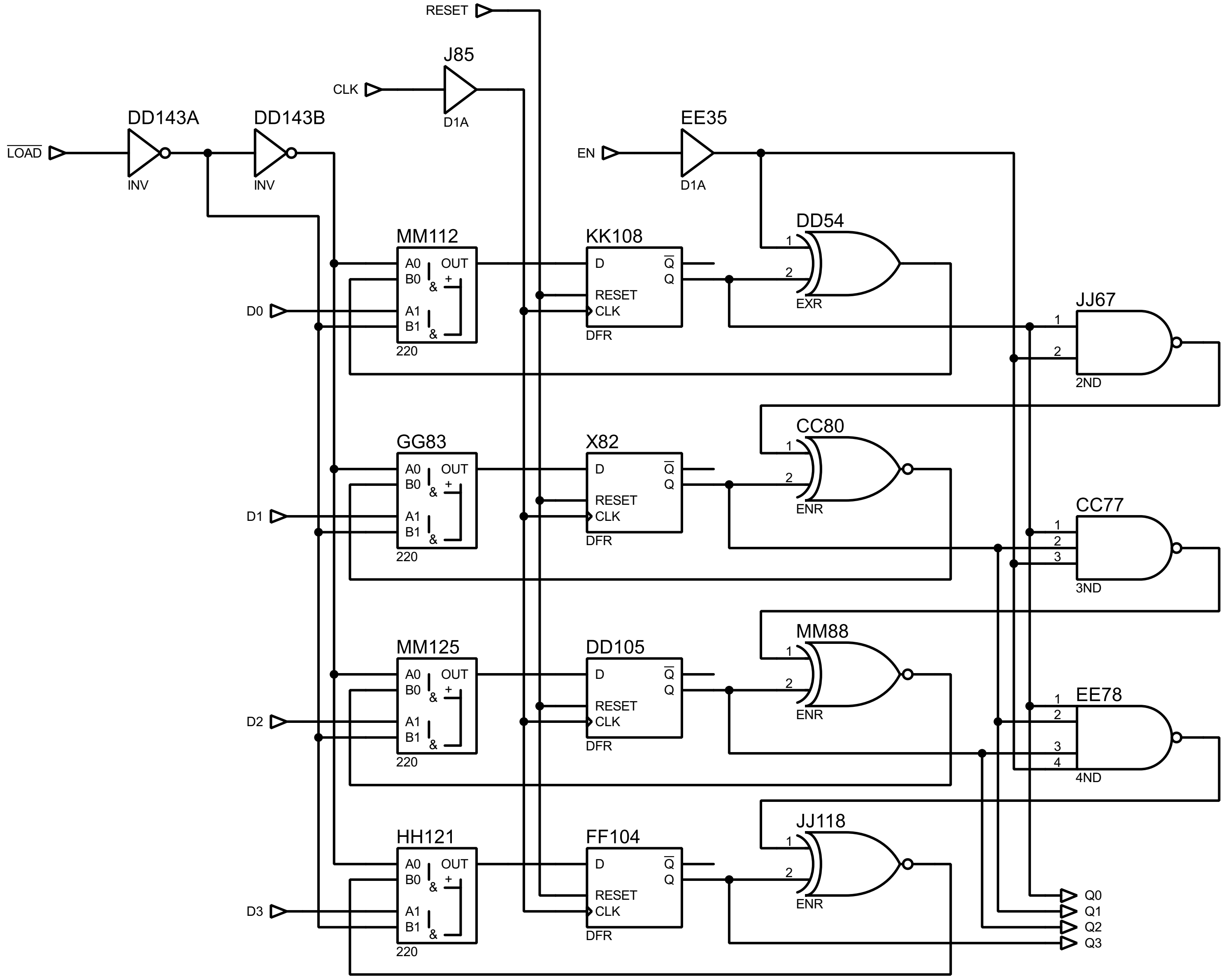
LOAD
DD143A
INV
DD143B
INV
CLK
J85
D1A
RESET
EN
EE35
D1A
MM112
GG83
MM125
HH121
A0
B0
A1
B1
OUT
&
+
220
D0
D1
D2
D3
KK108
X82
DD105
FF104
D
Q
RESET
CLK
DFR
DD54
EXR
CC80
MM88
JJ118
ENR
JJ67
2ND
CC77
3ND
EE78
4ND
1
2
3
4
Q0
Q1
Q2
Q3

FILE NAME: **007121.pdsprj**

DESIGN TITLE: **Konami 007121**

COUNTER9

BY: Sean Gonsalves

REV: 0

DATE:

03/04/2021

PAGE:

51 of 52

TIME: 00:06:09

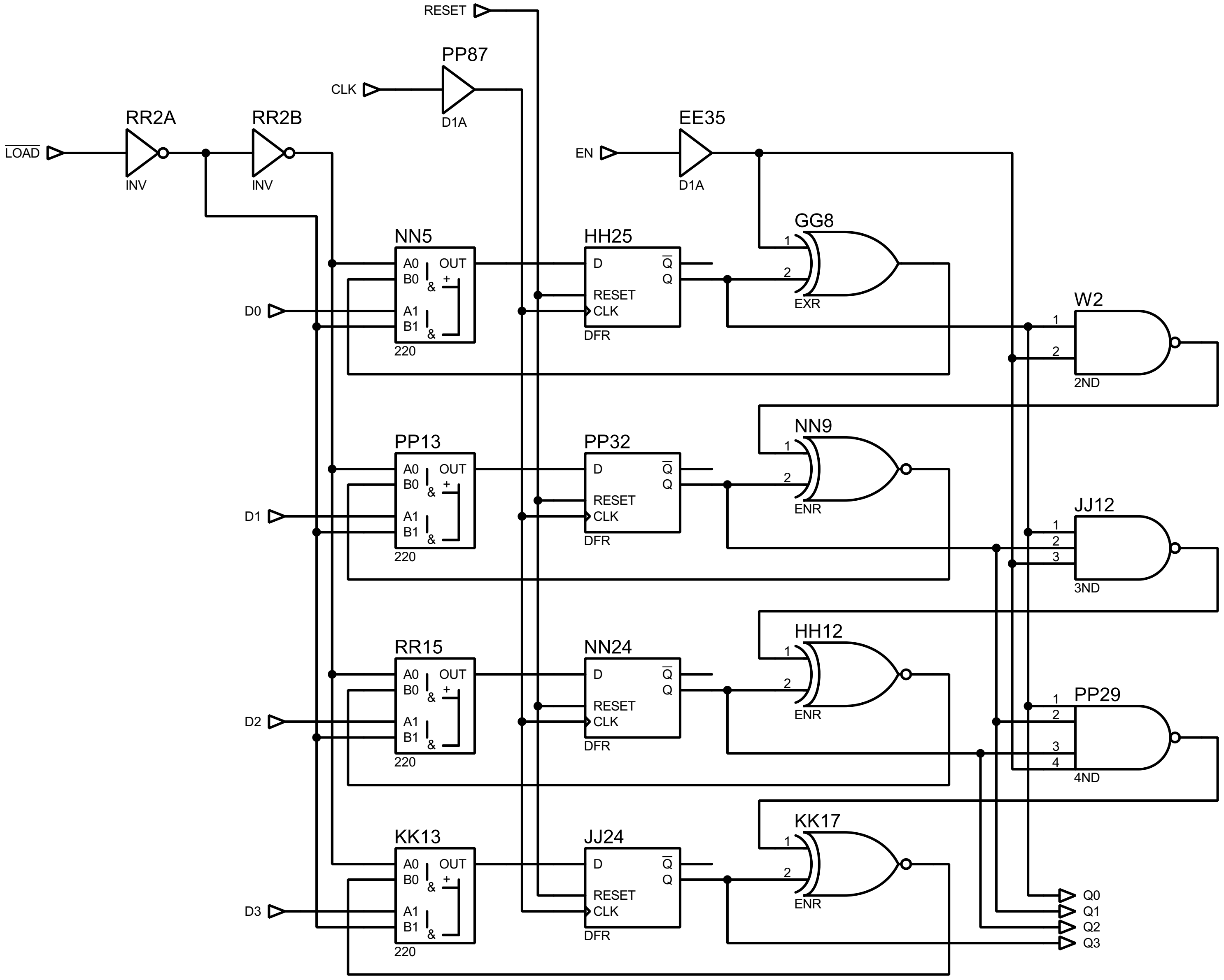
RESET
CLK
PP87
D1A
LOAD
RR2A
INV
RR2B
INV
EN
EE35
D1A
NN5
A0
B0
OUT
&
+
A1
B1
&
220
D0
HH25
D
Q̄
Q
RESET
CLK
DFR
GG8
1
2
EXR
W2
1
2
2ND
PP13
A0
B0
OUT
A1
B1
220
D1
PP32
D
Q̄
Q
RESET
CLK
DFR
NN9
1
2
ENR
JJ12
1
2
3
3ND
RR15
A0
B0
OUT
A1
B1
220
D2
NN24
D
Q̄
Q
RESET
CLK
DFR
HH12
1
2
ENR
PP29
1
2
3
4
4ND
KK13
A0
B0
OUT
A1
B1
220
D3
JJ24
D
Q̄
Q
RESET
CLK
DFR
KK17
1
2
ENR
Q0
Q1
Q2
Q3

FILE NAME: **007121.pdsprj**	**DATE:**
DESIGN TITLE: Konami 007121	**03/04/2021**
COUNTER14	**PAGE:** **52 of 52**
BY: Sean Gonsalves **REV: 0**	**TIME: 00:06:09**