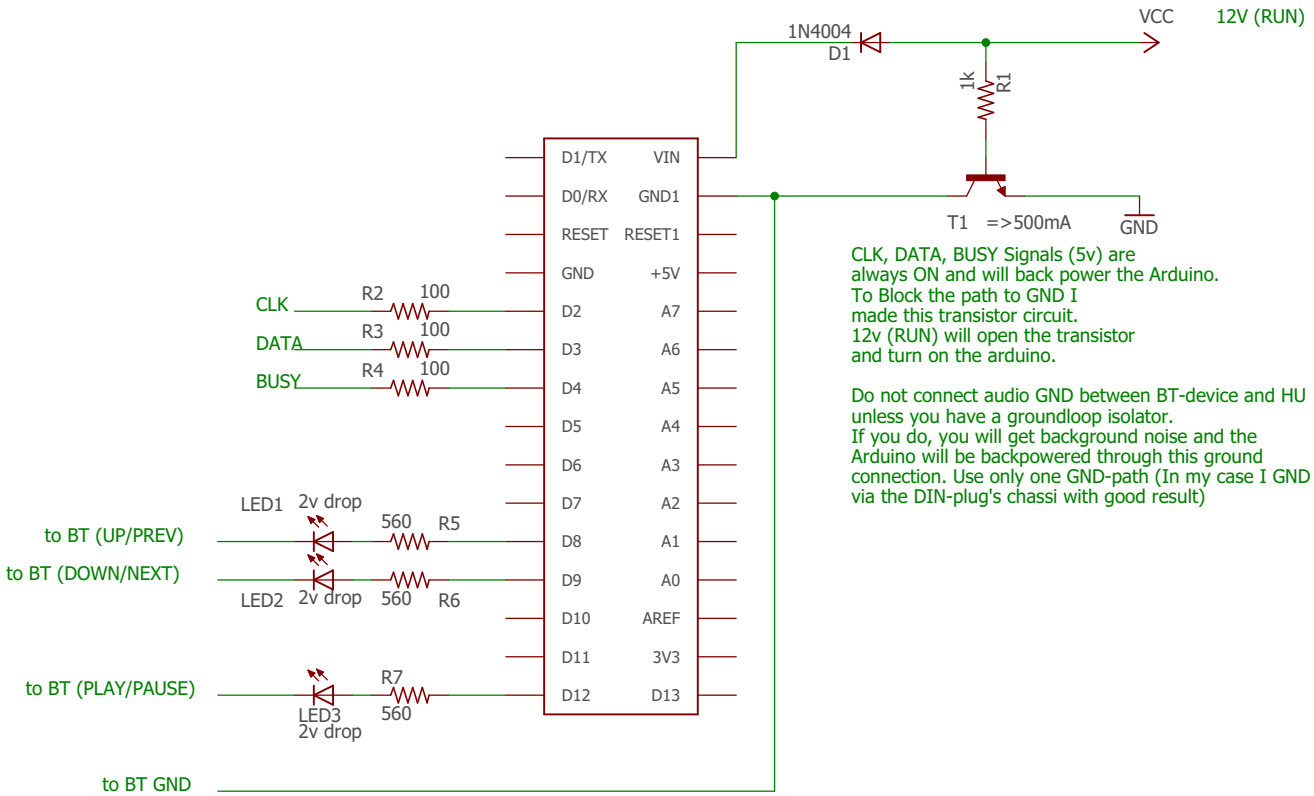

2017-04-14 20:33 C:\Users\VAAB\Documents\eagle\volvo melbus\untitled.sch (Sheet: 1/1)