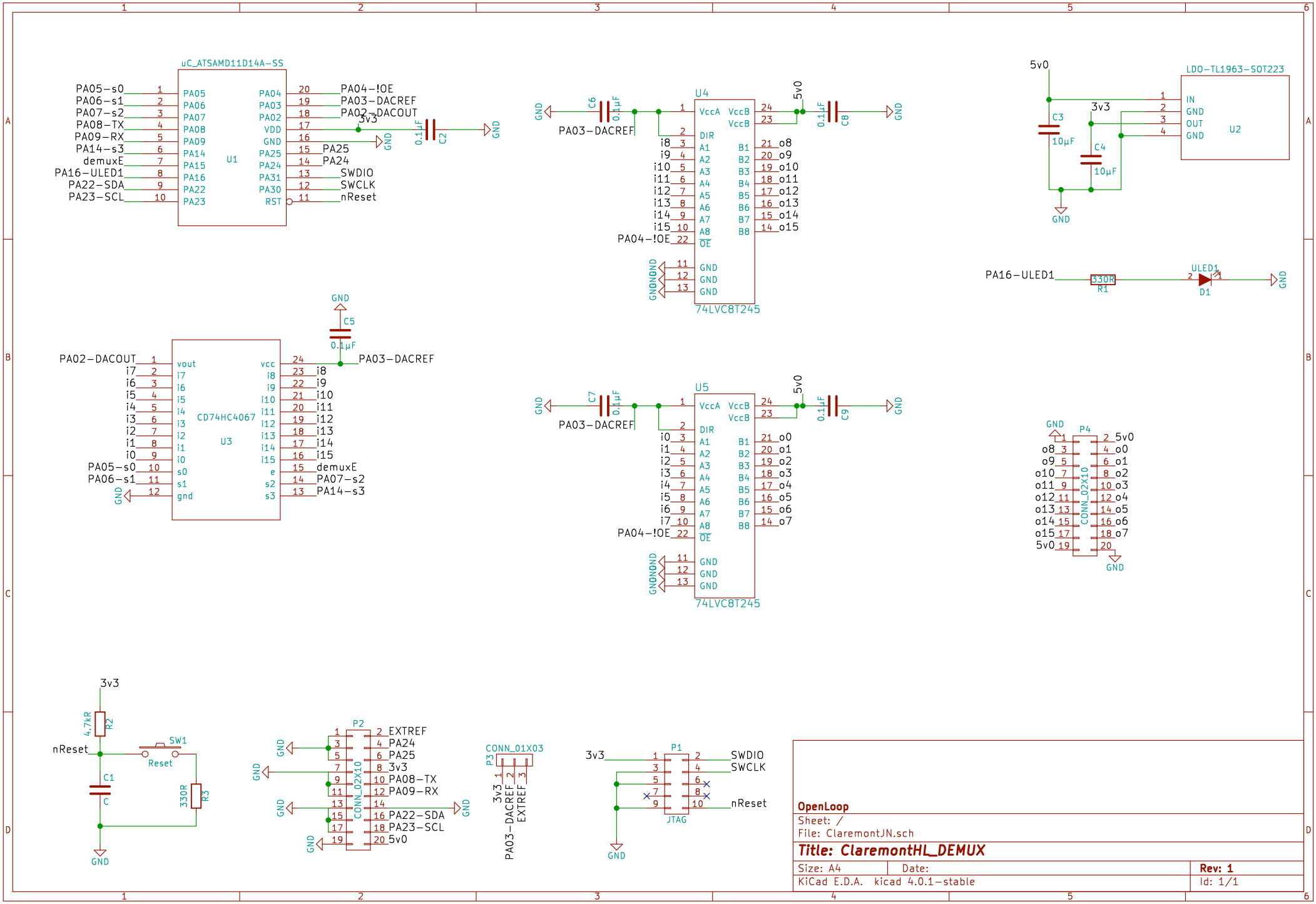
uC_ATSAMD11D14A-SS
U1
PA05-s0
PA06-s1
PA07-s2
PA08-TX
PA09-RX
PA14-s3
demuxE
PA16-ULED1
PA22-SDA
PA23-SCL
PA04-!OE
PA03-DACREF
PA02-DACOUT
3v3
PA25
PA24
SWDIO
SWCLK
nReset
GND
C2
0.1µF
U4
74LVC8T245
C6
C8
5v0
i8
i9
i10
i11
i12
i13
i14
i15
o8
o9
o10
o11
o12
o13
o14
o15
LDO-TL1963-SOT223
U2
C3
10µF
C4
10µF
IN
OUT
PA16-ULED1
330R
R1
ULED1
D1
U3
CD74HC4067
C5
0.1µF
PA02-DACOUT
PA05-s0
PA06-s1
PA07-s2
PA14-s3
demuxE
U5
C7
C9
o0
o1
o2
o3
o4
o5
o6
o7
P4
CONN_02X10
nReset
SW1
Reset
R2
4.7kR
C1
C
R3
330R
P2
EXTREF
PA24
PA25
PA08-TX
PA09-RX
PA22-SDA
PA23-SCL
P3
CONN_01X03
P1
JTAG
SWDIO
SWCLK
OpenLoop
Sheet: /
File: ClaremontJN.sch
Title: ClaremontHL_DEMUX
Size: A4
Date:
Rev: 1
KiCad E.D.A. kicad 4.0.1-stable
Id: 1/1