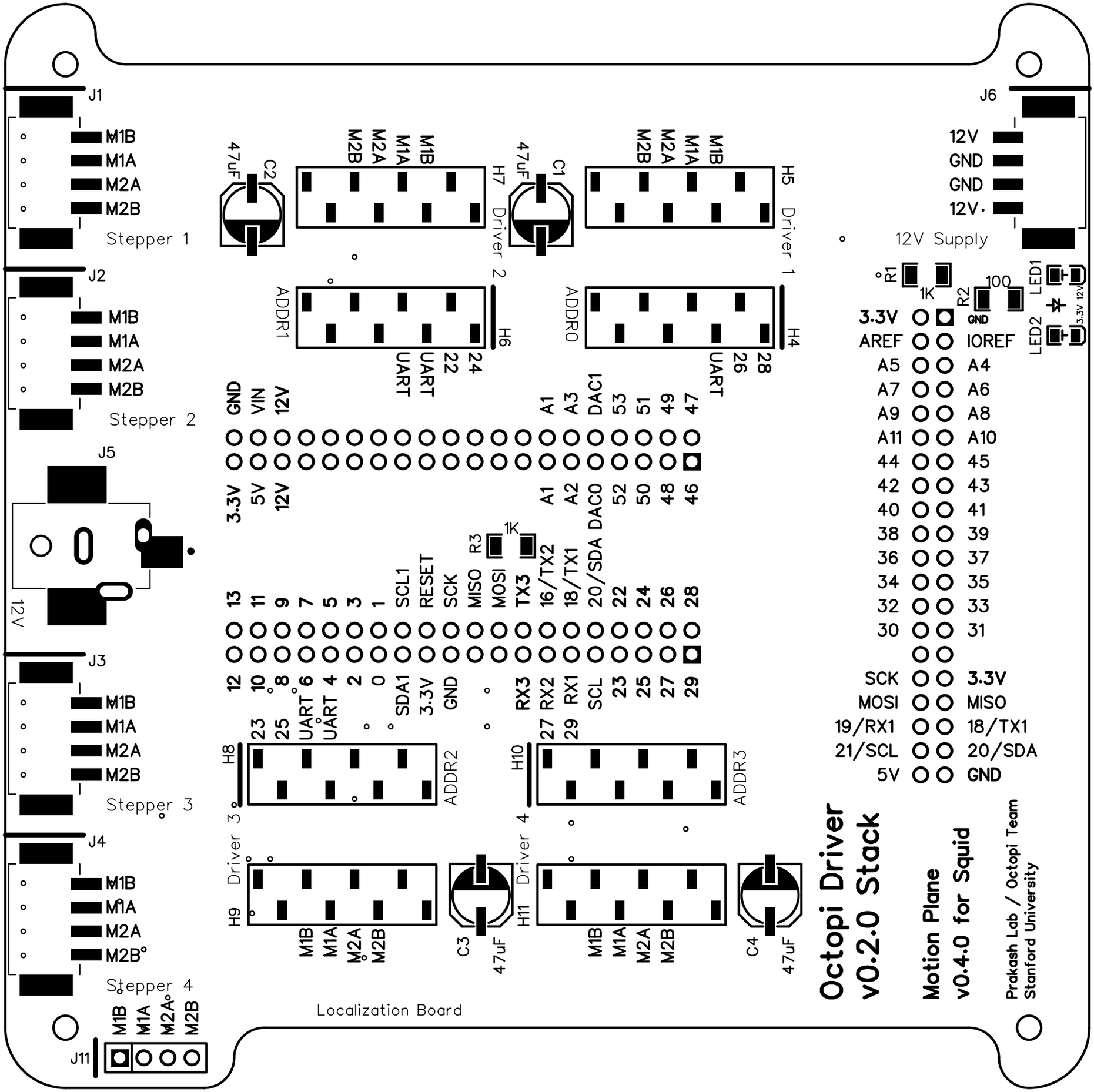
J1
M1B
M1A
M2A
M2B
Stepper 1
J2
Stepper 2
J5
12V
J3
Stepper 3
J4
Stepper 4
J11
J6
12V
GND
GND
12V
12V Supply
C2
47uF
C1
47uF
C3
47uF
C4
47uF
H7
Driver 2
H5
Driver 1
H6
ADDR1
H4
ADDR0
H8
Driver 3
ADDR2
H10
Driver 4
ADDR3
H9
H11
R1
1K
R2
100
R3
1K
LED1
LED2
3.3V 12V
3.3V
AREF
A5
A7
A9
A11
44
42
40
38
36
34
32
30
SCK
MOSI
19/RX1
21/SCL
5V
GND
IOREF
A4
A6
A8
A10
45
43
41
39
37
35
33
31
3.3V
MISO
18/TX1
20/SDA
GND
Localization Board
Octopi Driver
v0.2.0 Stack
Motion Plane
v0.4.0 for Squid
Prakash Lab / Octopi Team
Stanford University