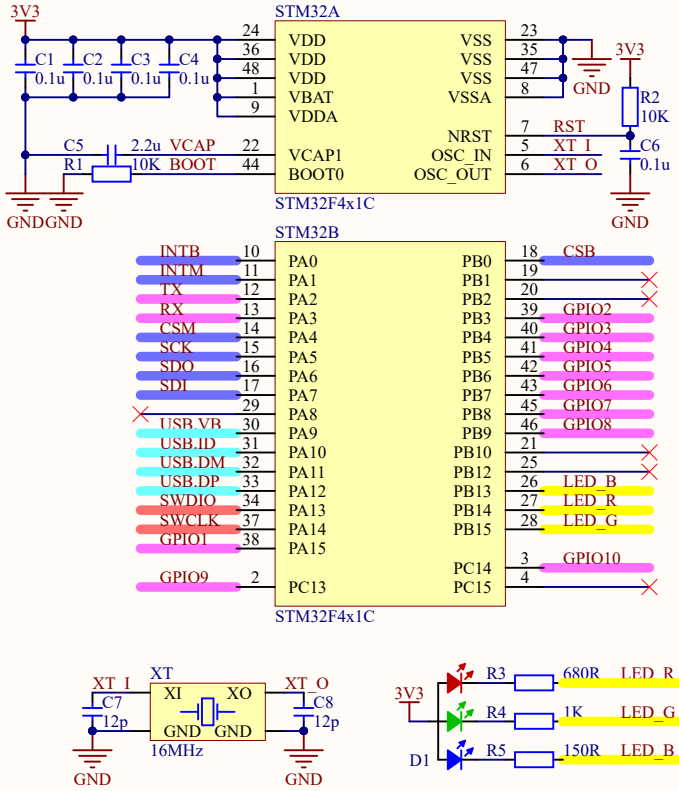

ARM CortexM4

- 3-Axis Gyroscope
- 3-Axis Accelerometer
- 3-Axis Compass
- 1-Axis Barometer

Sensor I2C Address		
CS	LOW	LOW
SDO	LOW	HIGH
MPU_ADDR	0xD0	0xD2
LPS_ADDR	0xB0	0xBA

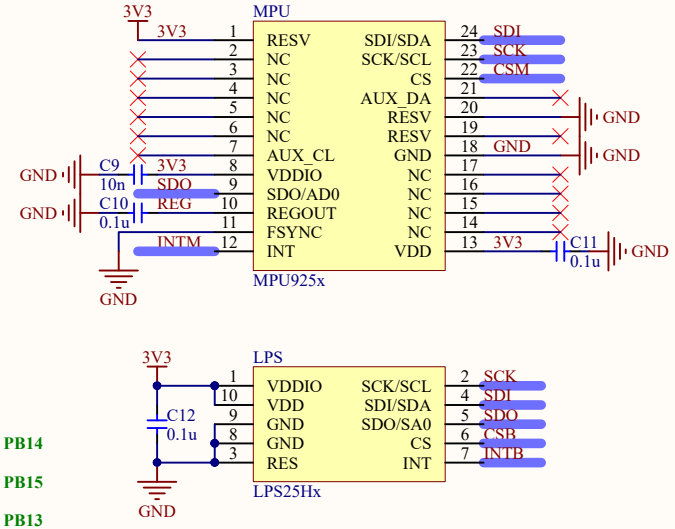

SmartIMU - Core

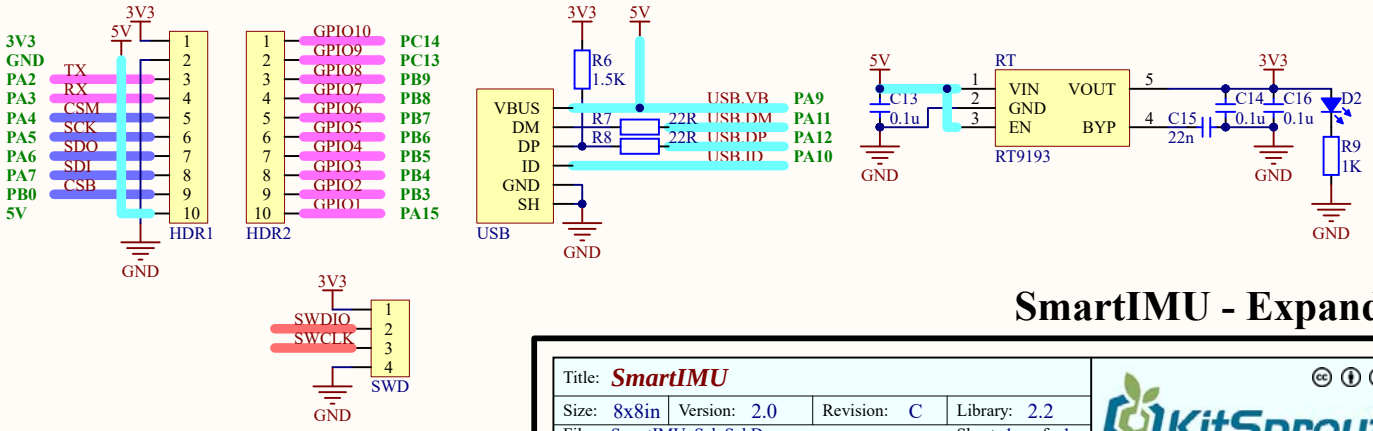

SmartIMU - Expand

Title: *SmartIMU*			
Size: 8x8in	Version: 2.0	Revision: C	Library: 2.2
File: SmartIMU_Sch.SchDoc			Sheet 1 of 1
Date: 2016/4/6			Drawn By Hom

KitSprout