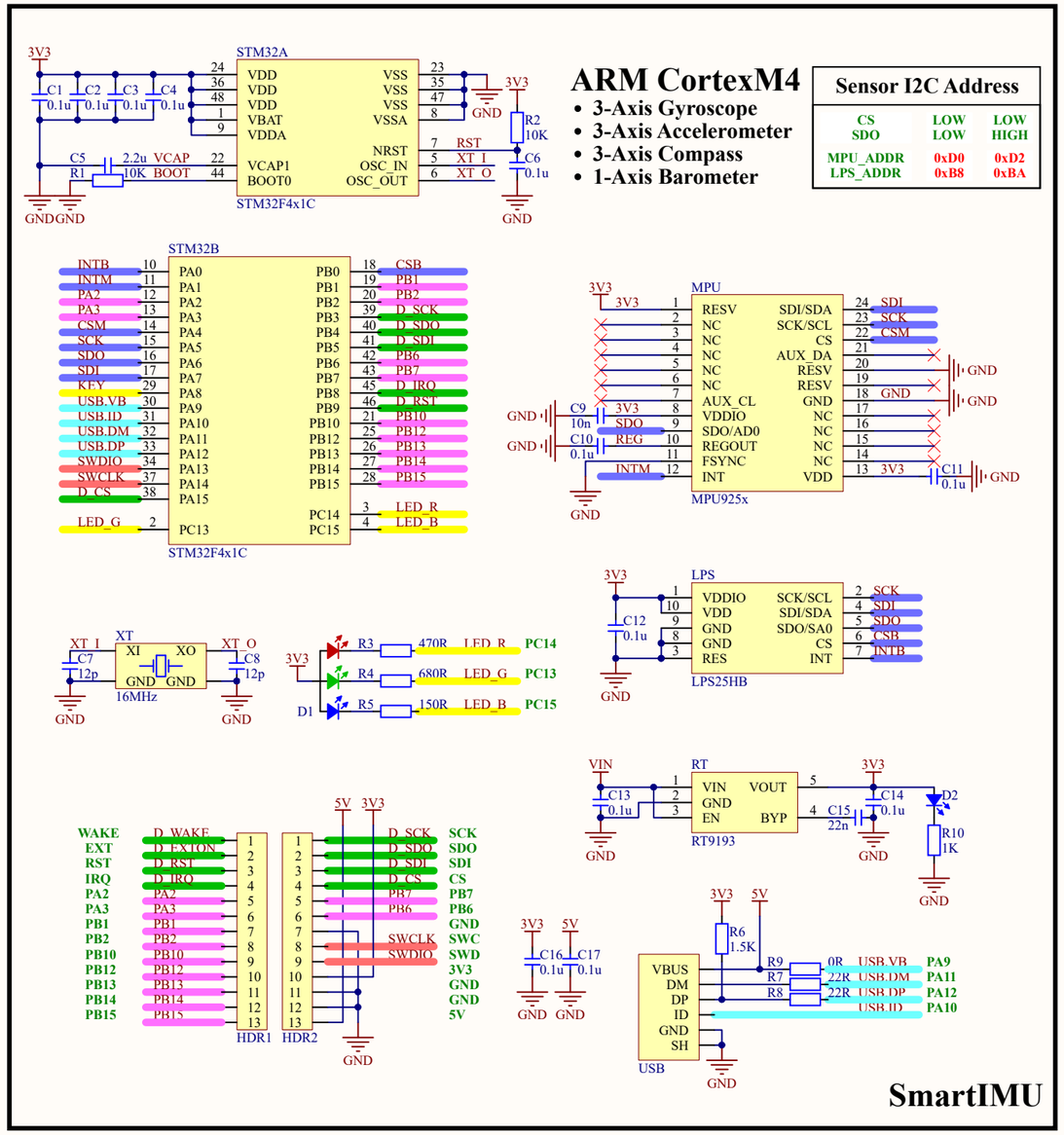

DecaWave

DWM1000 Module

- IEEE802.15.4-2011 UWB
- Data rate up to 6.8 Mb/s
- Communications range up to 300 m
- Supports TOF and TDOA location

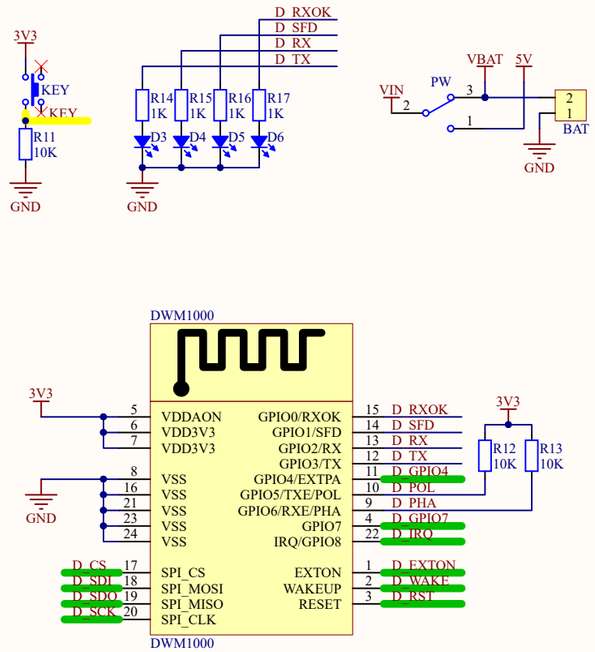

DWM1000

Title: *KDWM1000*			
Size: 12x8in	Version: 1.4	Revision: A	Library: 2.5
File: KDWM1000_Sch.SchDoc			Sheet 1 of 1
Date: 2016/5/10			Drawn By Hom

KitSprout