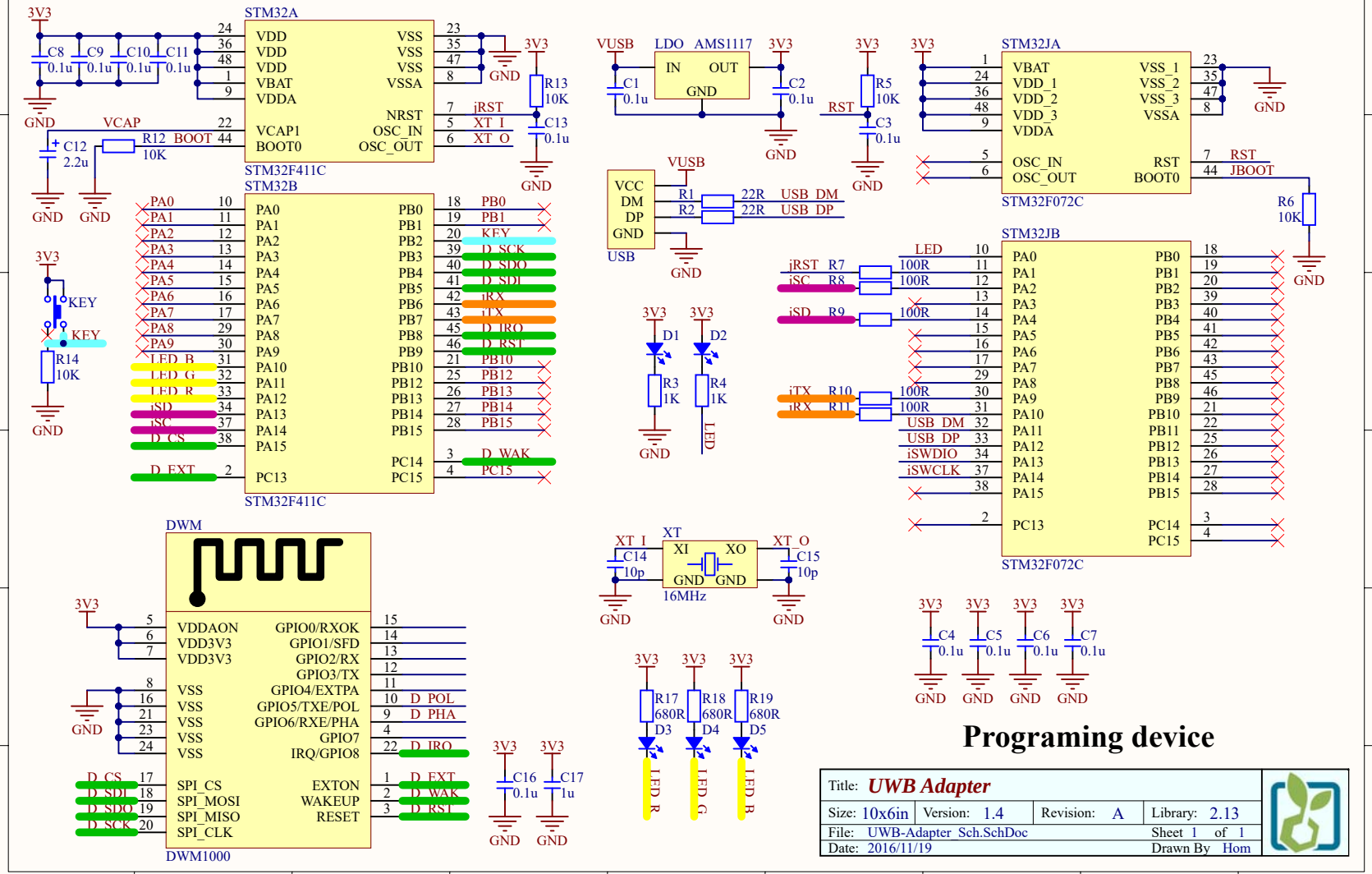
STM32A
STM32F411C
STM32B
STM32F411C
DWM
DWM1000
LDO AMS1117
IN OUT
GND
USB
VCC
DM
DP
GND
STM32JA
STM32F072C
STM32JB
STM32F072C
XT
XI XO
16MHz
3V3
GND
VUSB
VCAP
KEY
LED
Programing device
Title: UWB Adapter
Size: 10x6in
Version: 1.4
Revision: A
Library: 2.13
File: UWB-Adapter Sch.SchDoc
Sheet 1 of 1
Date: 2016/11/19
Drawn By Hom