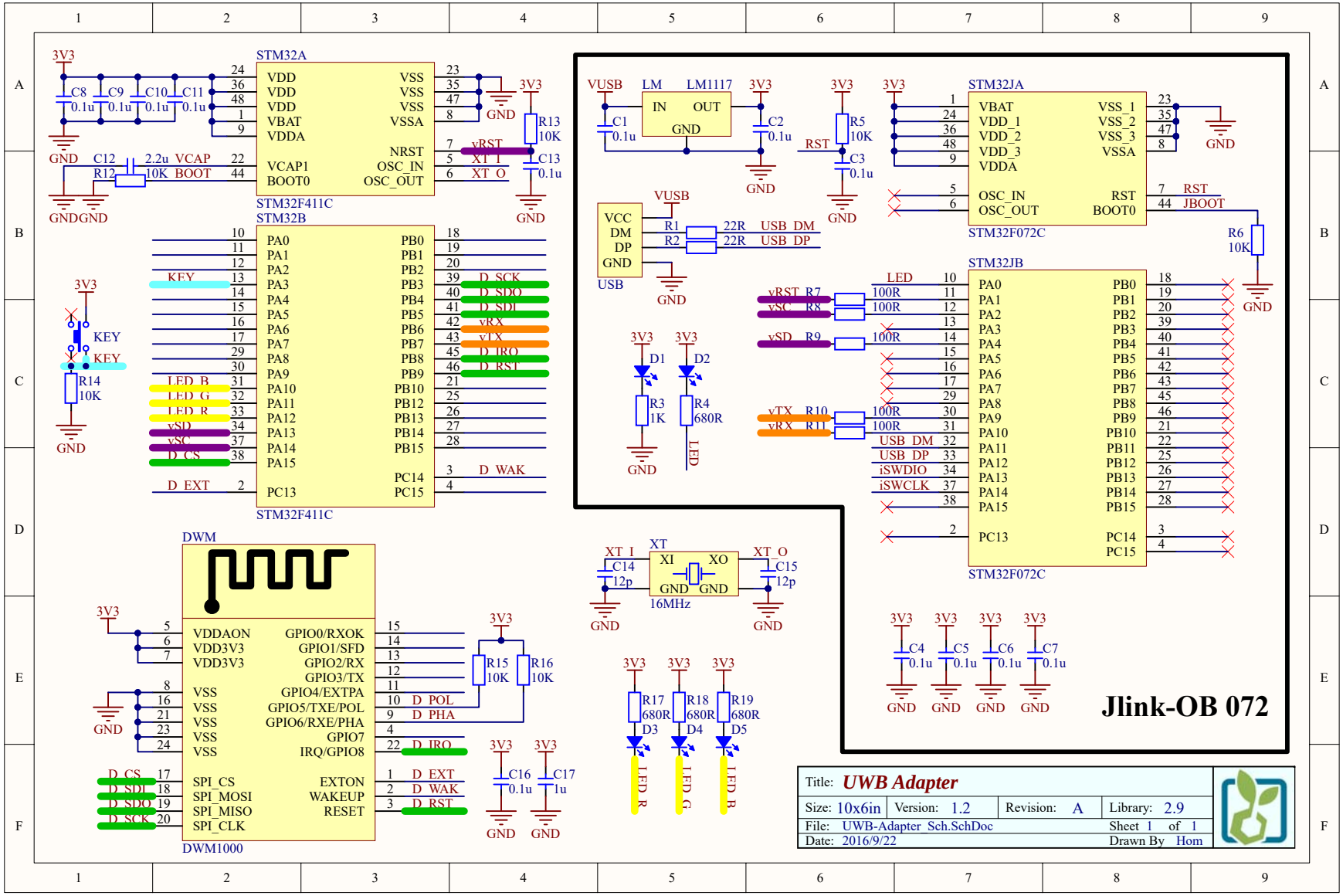
STM32A
STM32F411C
STM32B
STM32F411C
DWM
DWM1000
STM32JA
STM32F072C
STM32JB
STM32F072C
USB
LM1117
16MHz
Jlink-OB 072
Title: UWB Adapter
Size: 10x6in
Version: 1.2
Revision: A
Library: 2.9
File: UWB-Adapter_Sch.SchDoc
Sheet 1 of 1
Date: 2016/9/22
Drawn By Hom