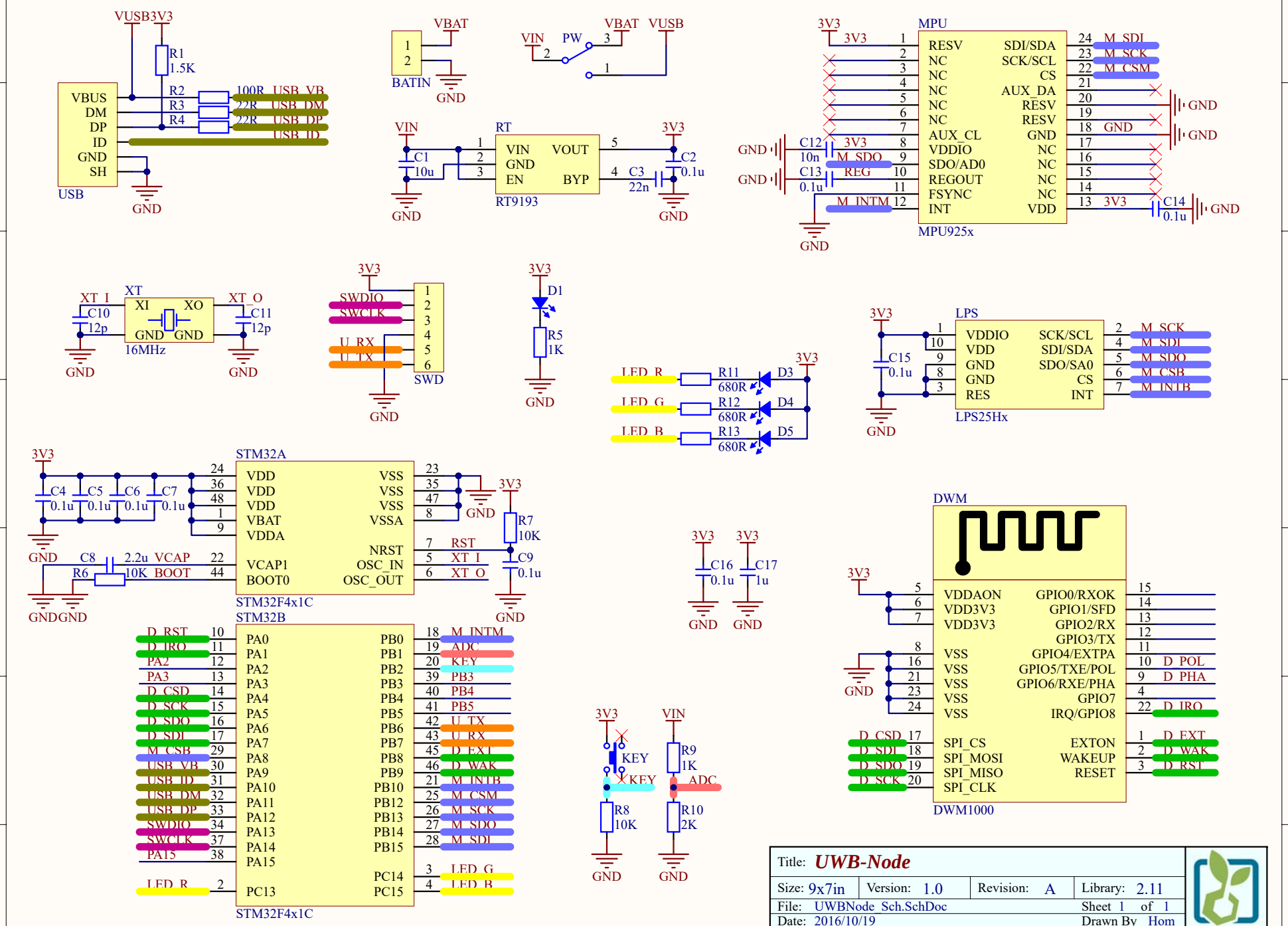
USB
VUSB
3V3
R1 1.5K
R2 100R USB_VB
R3 22R USB_DM
R4 22R USB_DP
USB_ID
VBUS DM DP ID GND SH
GND
BATIN
VBAT
VIN PW VBAT VUSB
RT
VIN GND EN VOUT BYP
RT9193
C1 10u
C2 0.1u
C3 22n
MPU
RESV NC NC NC NC NC NC AUX_CL VDDIO SDO/AD0 REGOUT FSYNC INT
SDI/SDA SCK/SCL CS AUX_DA RESV RESV GND NC NC NC NC VDD
M_SDI M_SCK M_CSM
M_SDO
M_INTM
C12 10n
C13 0.1u
C14 0.1u
REG
MPU925x
XT
XI XO GND GND
16MHz
XT_I XT_O
C10 12p
C11 12p
SWD
SWDIO SWCLK U_RX U_TX
D1
R5 1K
LED_R LED_G LED_B
R11 680R
R12 680R
R13 680R
D3 D4 D5
LPS
VDDIO VDD GND GND RES
SCK/SCL SDI/SDA SDO/SA0 CS INT
M_SCK M_SDI M_SDO M_CSB M_INTB
C15 0.1u
LPS25Hx
STM32A
VDD VDD VDD VBAT VDDA
VSS VSS VSS VSSA
NRST OSC_IN OSC_OUT
VCAP1 BOOT0
C4 0.1u C5 0.1u C6 0.1u C7 0.1u
C8 2.2u VCAP
R6 10K BOOT
R7 10K
C9 0.1u
RST XT_I XT_O
STM32F4x1C
STM32B
PA0 PA1 PA2 PA3 PA4 PA5 PA6 PA7 PA8 PA9 PA10 PA11 PA12 PA13 PA14 PA15 PC13
PB0 PB1 PB2 PB3 PB4 PB5 PB6 PB7 PB8 PB9 PB10 PB12 PB13 PB14 PB15 PC14 PC15
D_RST D_IRQ PA2 PA3 D_CSD D_SCK D_SDO D_SDI M_CSB USB_VB USB_ID USB_DM USB_DP SWDIO SWCLK PA15 LED_R
M_INTM ADC KEY PB3 PB4 PB5 U_TX U_RX D_EXT D_WAK M_INTB M_CSM M_SCK M_SDO M_SDI LED_G LED_B
C16 0.1u
C17 1u
DWM
VDDAON VDD3V3 VDD3V3 VSS VSS VSS VSS VSS SPI_CS SPI_MOSI SPI_MISO SPI_CLK
GPIO0/RXOK GPIO1/SFD GPIO2/RX GPIO3/TX GPIO4/EXTPA GPIO5/TXE/POL GPIO6/RXE/PHA GPIO7 IRQ/GPIO8 EXTON WAKEUP RESET
D_POL D_PHA D_IRQ D_EXT D_WAK D_RST
DWM1000
KEY
R8 10K
R9 1K
R10 2K
ADC
Title: UWB-Node
Size: 9x7in
Version: 1.0
Revision: A
Library: 2.11
File: UWBNode_Sch.SchDoc
Sheet 1 of 1
Date: 2016/10/19
Drawn By Hom