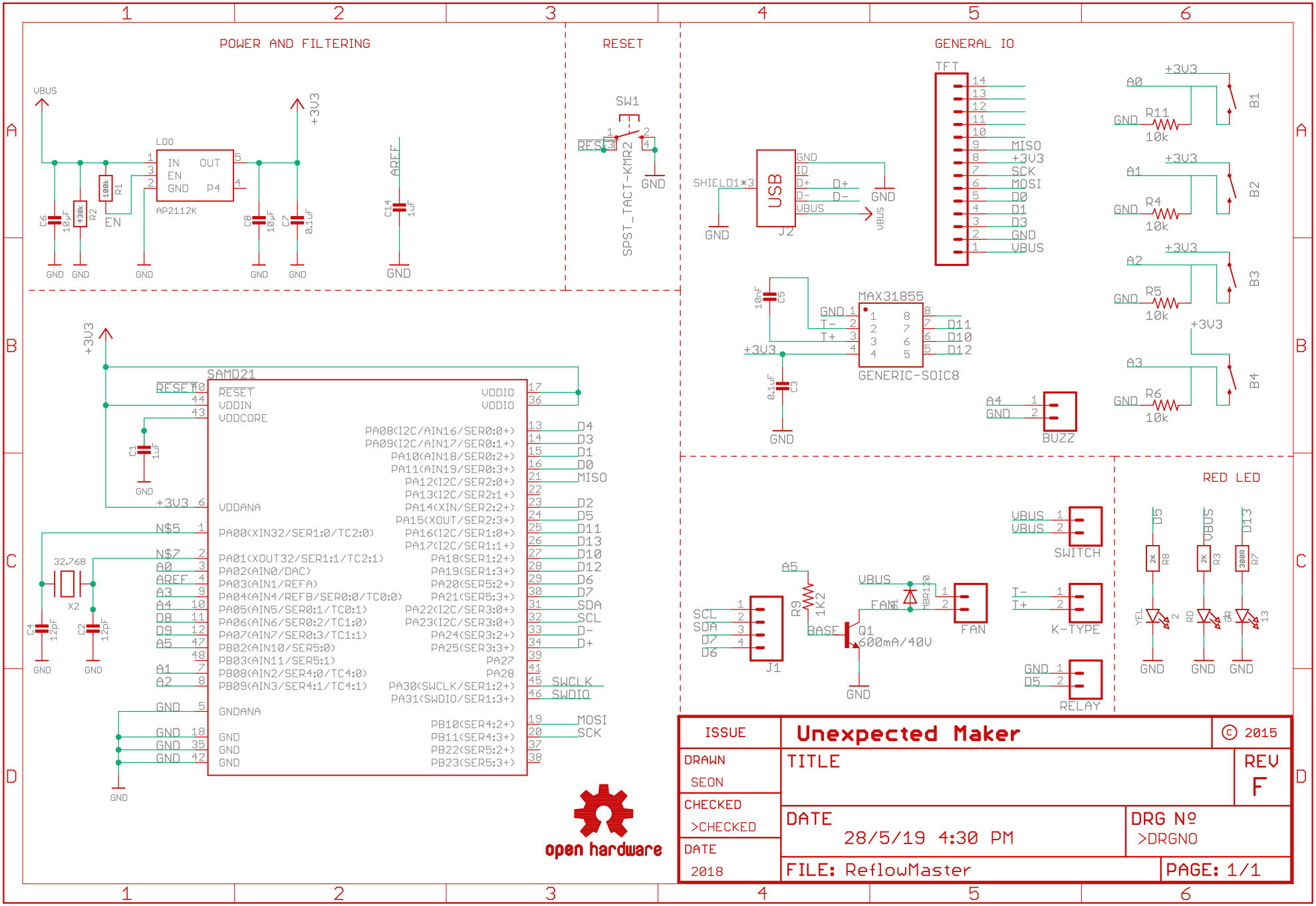
POWER AND FILTERING
RESET
GENERAL IO
VBUS
+3V3
LDO
IN
OUT
EN
GND
P4
AP2112K
R1
100k
R2
430k
C6
10µF
C8
10µF
C7
0.1uF
AREF
C14
1uF
GND
SW1
RESET
SPST_TACT-KMR2
SAMD21
RESET
VDDIN
VDDCORE
VDDIO
VDDANA
GNDANA
C1
1uF
32.768
X2
C4
12pF
C2
12pF
PA08(I2C/AIN16/SER0:0+)
PA09(I2C/AIN17/SER0:1+)
PA10(AIN18/SER0:2+)
PA11(AIN19/SER0:3+)
PA12(I2C/SER2:0+)
PA13(I2C/SER2:1+)
PA14(XIN/SER2:2+)
PA15(XOUT/SER2:3+)
PA16(I2C/SER1:0+)
PA17(I2C/SER1:1+)
PA18(SER1:2+)
PA19(SER1:3+)
PA20(SER5:2+)
PA21(SER5:3+)
PA22(I2C/SER3:0+)
PA23(I2C/SER3:0+)
PA24(SER3:2+)
PA25(SER3:3+)
PA27
PA28
PA30(SWCLK/SER1:2+)
PA31(SWDIO/SER1:3+)
PB10(SER4:2+)
PB11(SER4:3+)
PB22(SER5:2+)
PB23(SER5:3+)
PA00(XIN32/SER1:0/TC2:0)
PA01(XOUT32/SER1:1/TC2:1)
PA02(AIN0/DAC)
PA03(AIN1/REFA)
PA04(AIN4/REFB/SER0:0/TC0:0)
PA05(AIN5/SER0:1/TC0:1)
PA06(AIN6/SER0:2/TC1:0)
PA07(AIN7/SER0:3/TC1:1)
PB02(AIN10/SER5:0)
PB03(AIN11/SER5:1)
PB08(AIN2/SER4:0/TC4:0)
PB09(AIN3/SER4:1/TC4:1)
D4
D3
D1
D0
MISO
D2
D5
D11
D13
D10
D12
D6
D7
SDA
SCL
D-
D+
SWCLK
SWDIO
MOSI
SCK
open hardware
SHIELD1*3
USB
J2
ID
D+
D-
VBUS
TFT
MISO
+3V3
SCK
MOSI
D0
D1
D3
GND
VBUS
A0
A1
A2
A3
A4
R11
R4
R5
R6
10k
B1
B2
B3
B4
MAX31855
T-
T+
D11
D10
D12
GENERIC-SOIC8
C5
10nF
C3
0.1uF
BUZZ
SWITCH
K-TYPE
RELAY
J1
SCL
SDA
D7
D6
A5
R9
1K2
BASE
Q1
600mA/40V
FAN
MBR120
RED LED
D5
D13
R8
R3
R7
2K
300R
YEL
RD
GR
ISSUE
DRAWN
SEON
CHECKED
>CHECKED
DATE
2018
Unexpected Maker
© 2015
TITLE
REV
F
DATE
28/5/19 4:30 PM
DRG Nº
>DRGNO
FILE: ReflowMaster
PAGE: 1/1