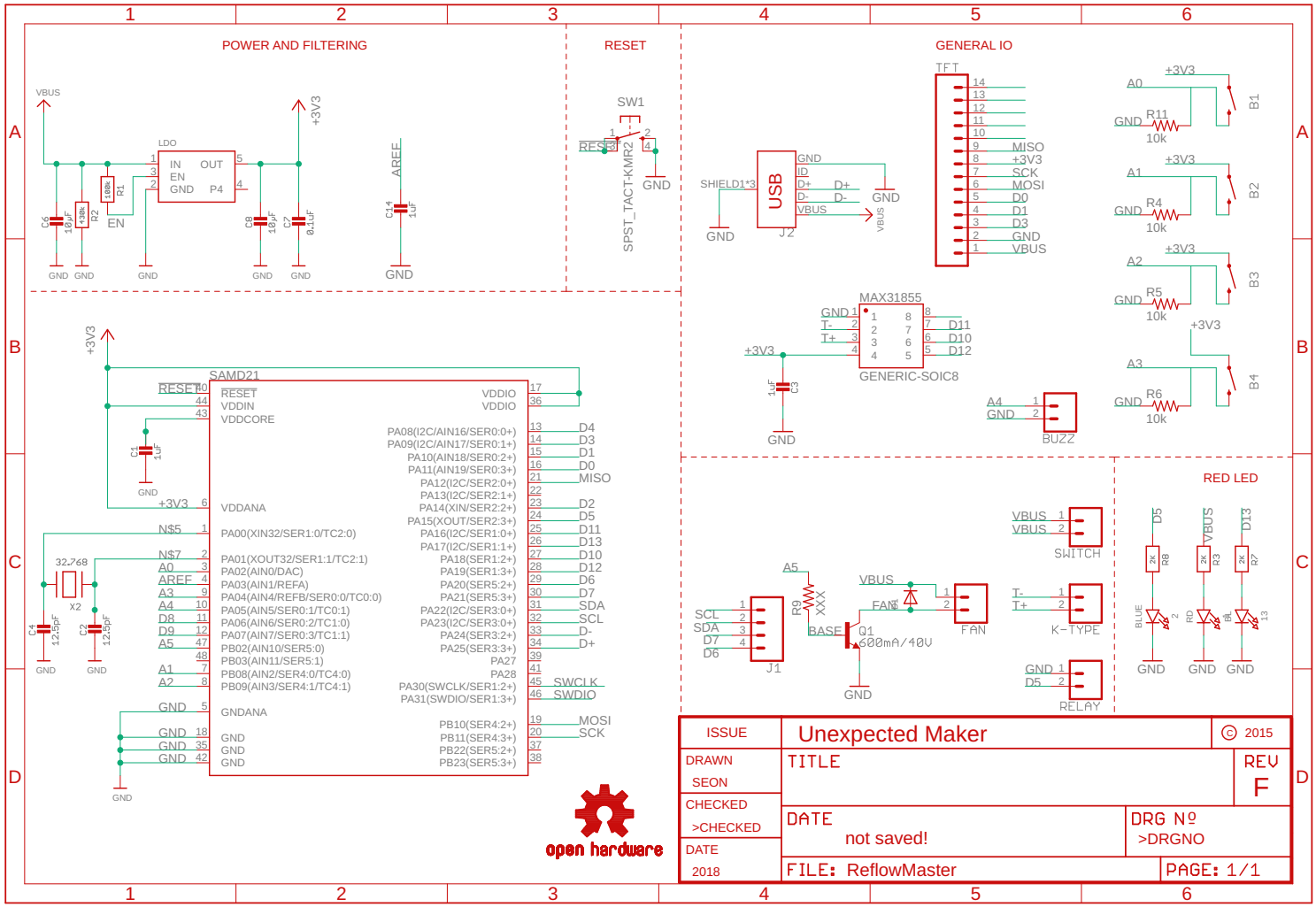

ISSUE	Unexpected Maker	© 2015
DRAWN SEON	TITLE	REV F
CHECKED >CHECKED	DATE not saved!	DRG Nº >DRGNO
DATE 2018	FILE: ReflowMaster	PAGE: 1/1