We are using a pot instead – so no longer needed

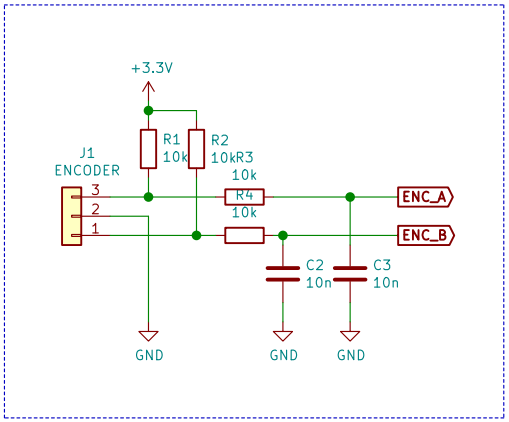

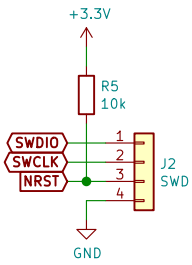

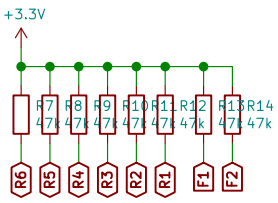

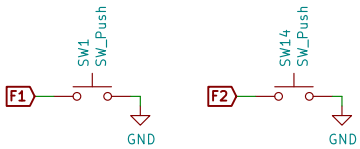

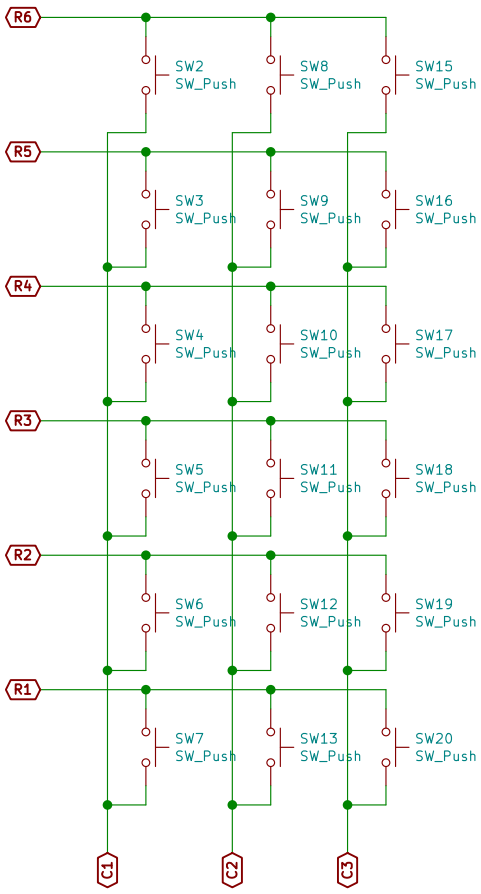

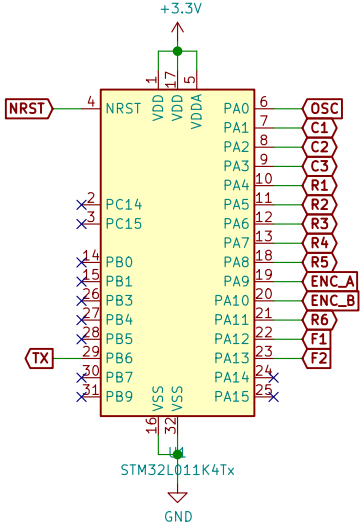

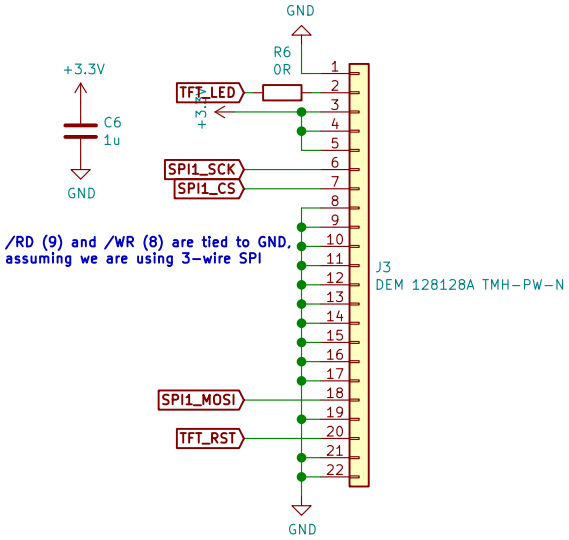

/RD (9) and /WR (8) are tied to GND, assuming we are using 3-wire SPI

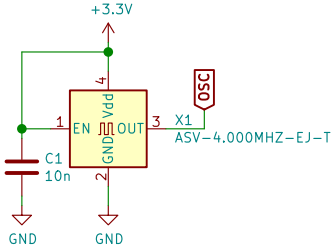

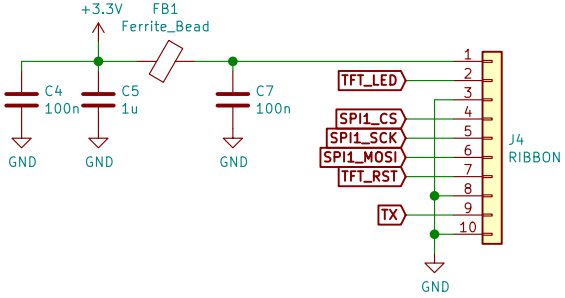

TR-9 Open Source Digital Radio

Sheet: /
File: HMI.sch

Title: HMI Board

Size: A4	Date: 2020-01-18	Rev:
KiCad E.D.A. kicad (5.1.4)-1		Id: 1/1