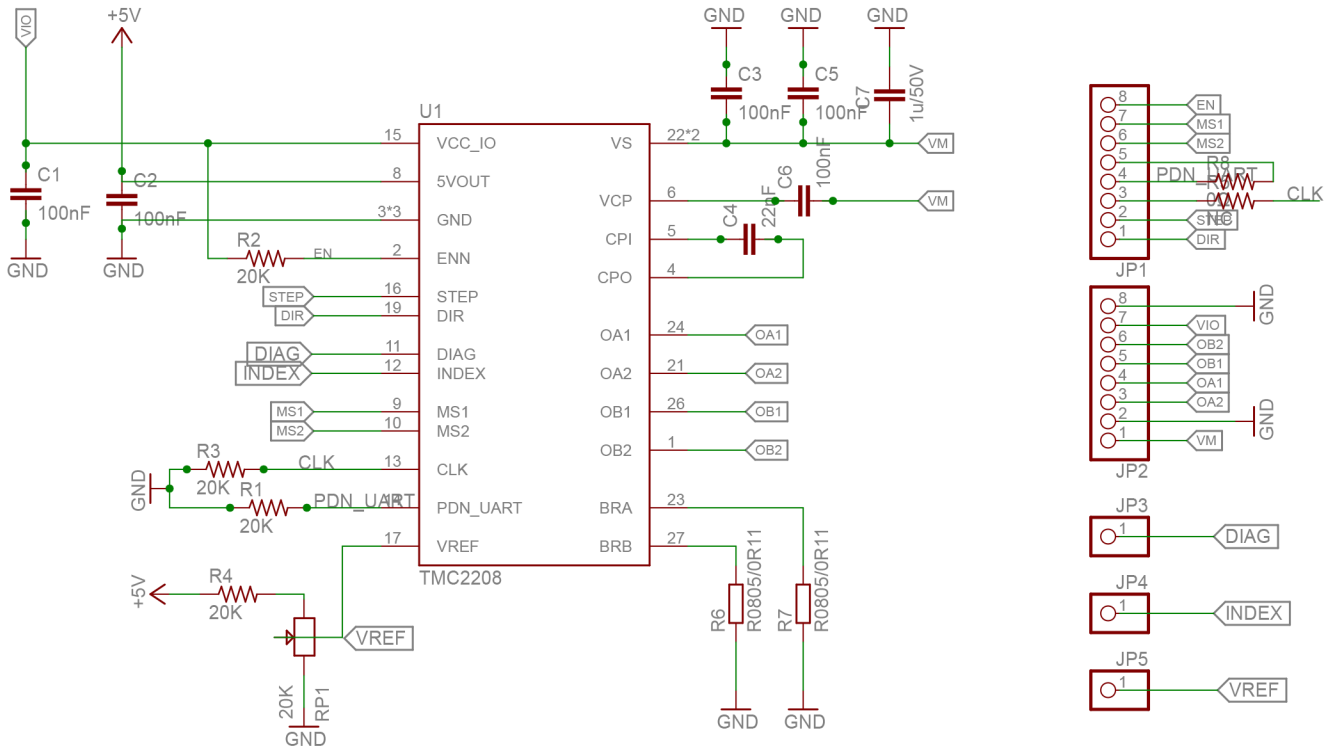

VRef 0...2.5V (0.11 Ohm sense resistor)
>=2.50V 100% - 1.77A RMS
1.25V 50% - 0.88A RMS
0.50V 20% - 0.35A RMS

EN (with pull-up)
GND driver enabled
VCC driver disabled

PDN/UART (with pull-down)
GND automatic standstill current reduction
VCC automatic standstill power down disable
optional UART interface

CLK (with pull-down)
GND internal clock
optional supply external clock

MS1	MS2	Steps	Interpolation	ChopperMode
GND	GND	8	Yes to 256	stealthChop2
VIO	GND	2	Yes to 256	stealthChop2
GND	VIO	4	Yes to 256	stealthChop2
VIO	VIO	16	Yes to 256	stealthChop2

To access all other modes (eg spreadCycle) you have to use the UART interface.

Released under the Creative Commons Attribution Share-Alike License. http://creativecommons.org/licenses/by-sa/4.0/

Designed by Stephan Watterott (Watterott electronic)

www.watterott.com

MKS TMC2208

2019/5/31 ??? ?? 3:16:58

Sheet: 1/1