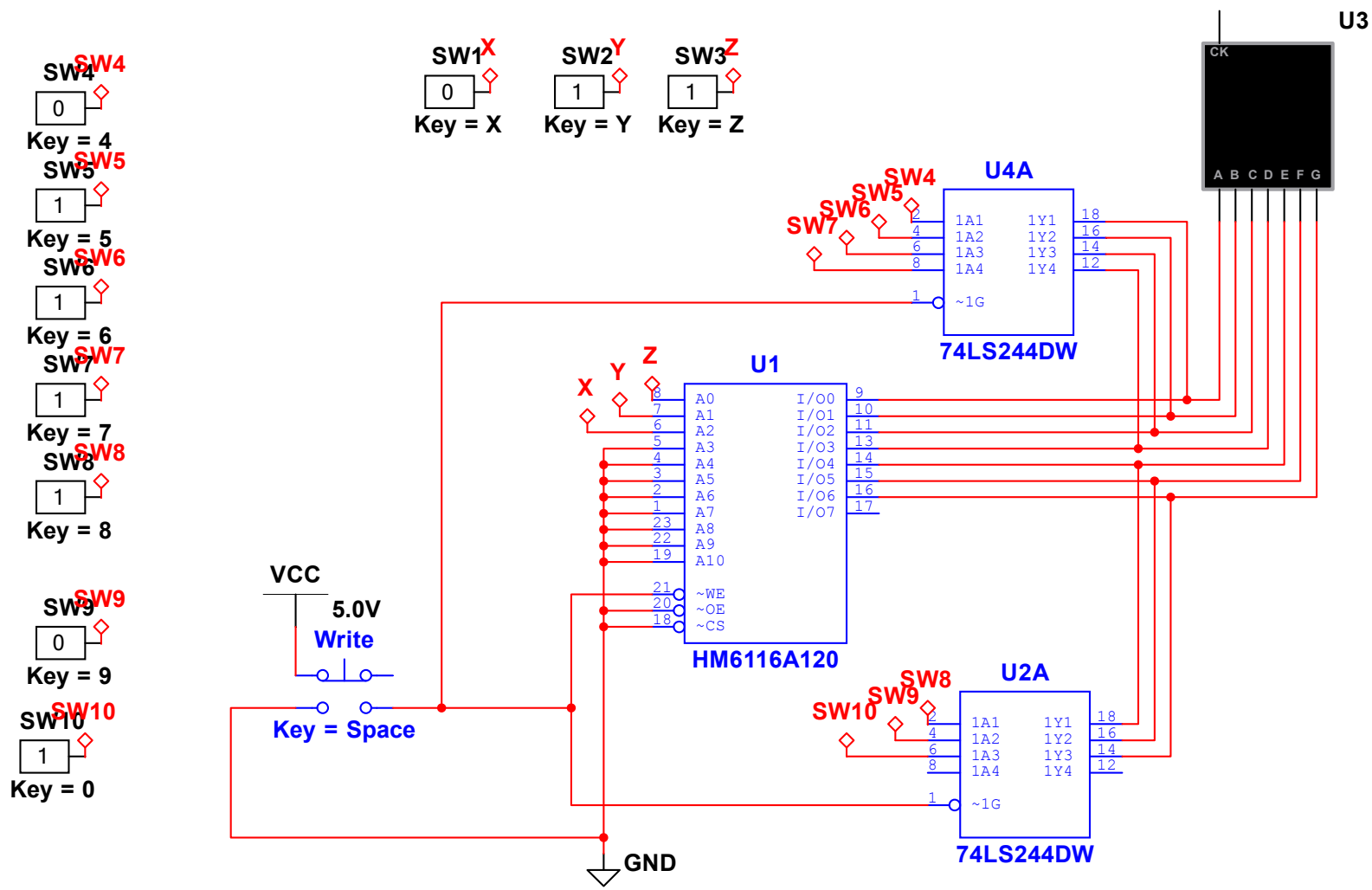

CDA 3101 Introduction to Computer Logic
University of North Florida
Building 15, 1 UNF Drive
Jacksonville, FL 32224

UNF UNIVERSITY of NORTH FLORIDA
College of Computing, Engineering & Construction

Title: Lab 9	Desc.: Static RAM Memory	
Designed by: Francis Rukab	Document No:	Revision:0
Checked by:	Date: 071418	Size: A
Approved by:	Sheet 1 of 1	