USED ON

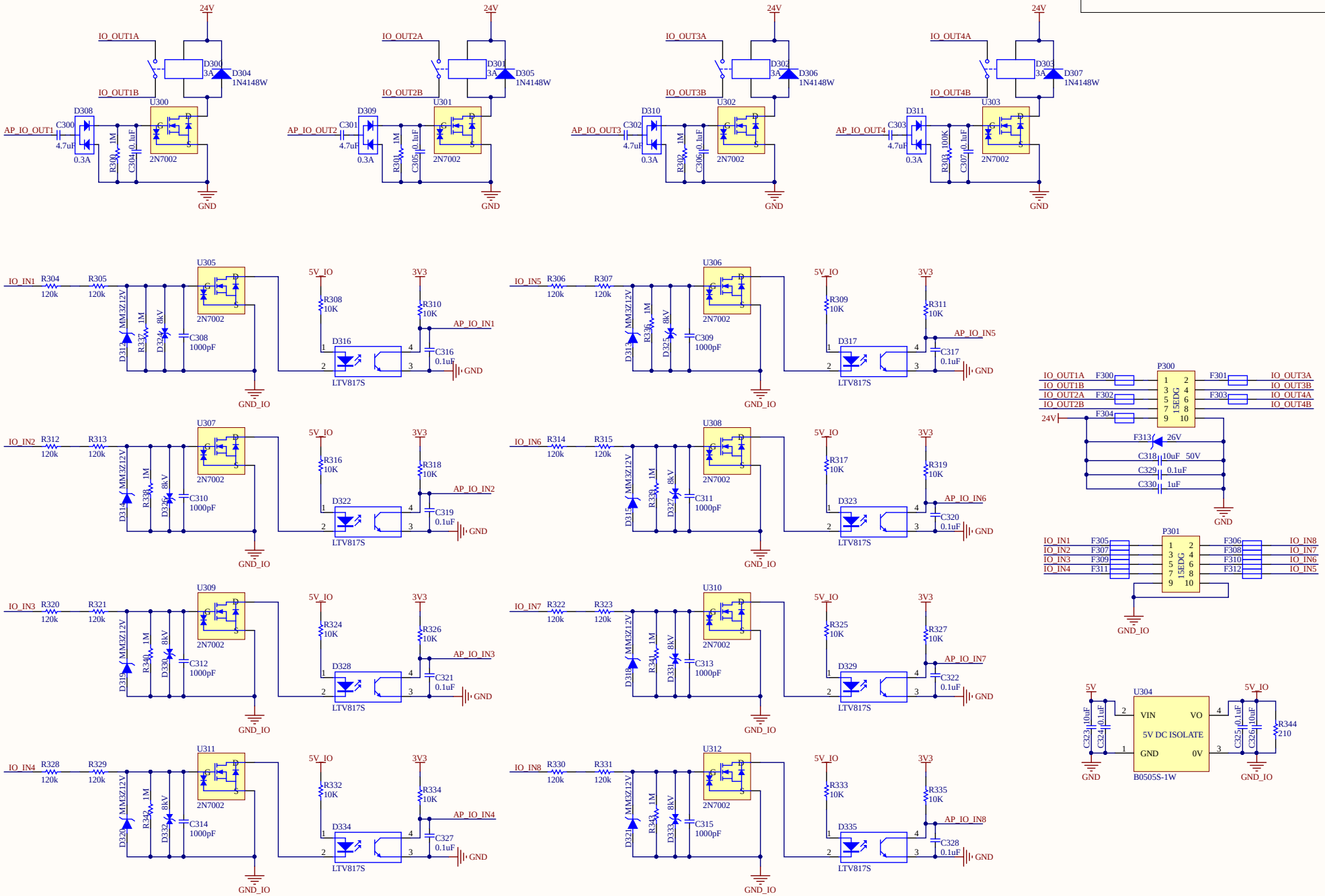

DWN: Chen Minjie	KINGSUM 神州金山	Buliding 5, No.1528, Gu Mei Rd HQ6, Shanghai, China 200233	
CHK: Fanmingjie			
APVD: *		Title: KS-WL-GW-IO.SchDoc	
Size A3	Date: 2017/8/28	Number: *	Sheet1 of 1 Rev 0.1
	Time: 11:44:12		

File: E:\kingsum\newgetway\doc\新网关原理图\KS-WL-GW\KS-WL-GW-IO.SchDoc