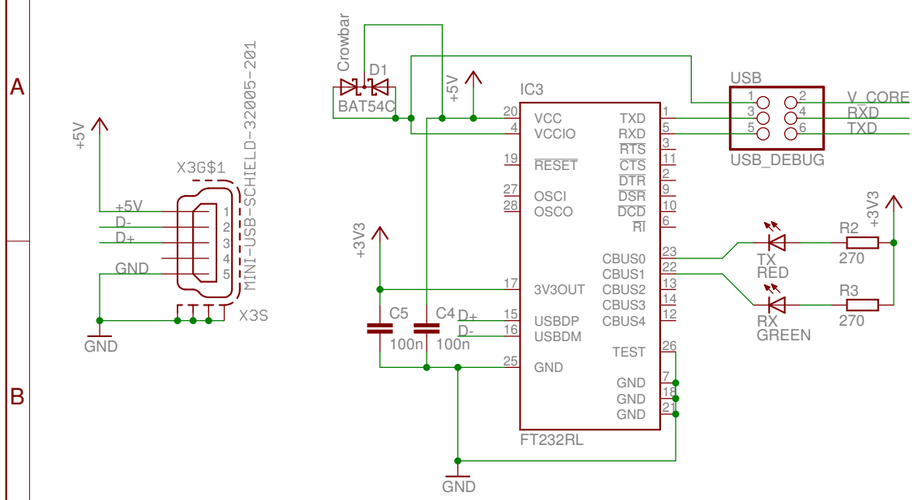

USB interface

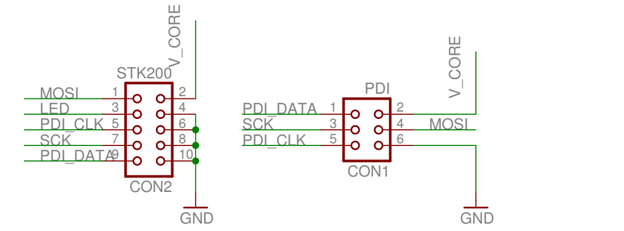

Programming interface

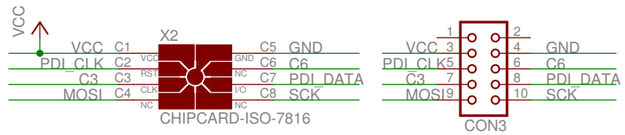

ChipCard interface

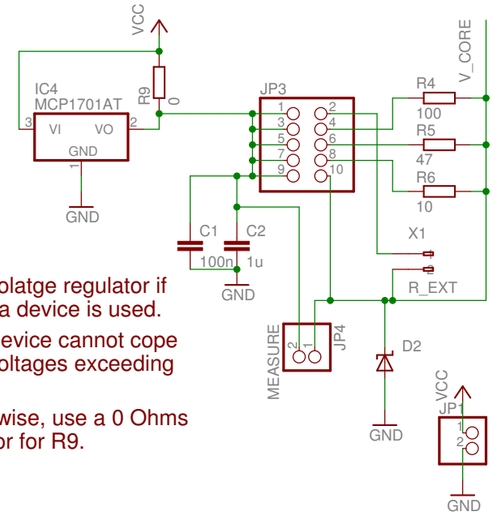

Voltage regulator, shunt selection, and current measurement

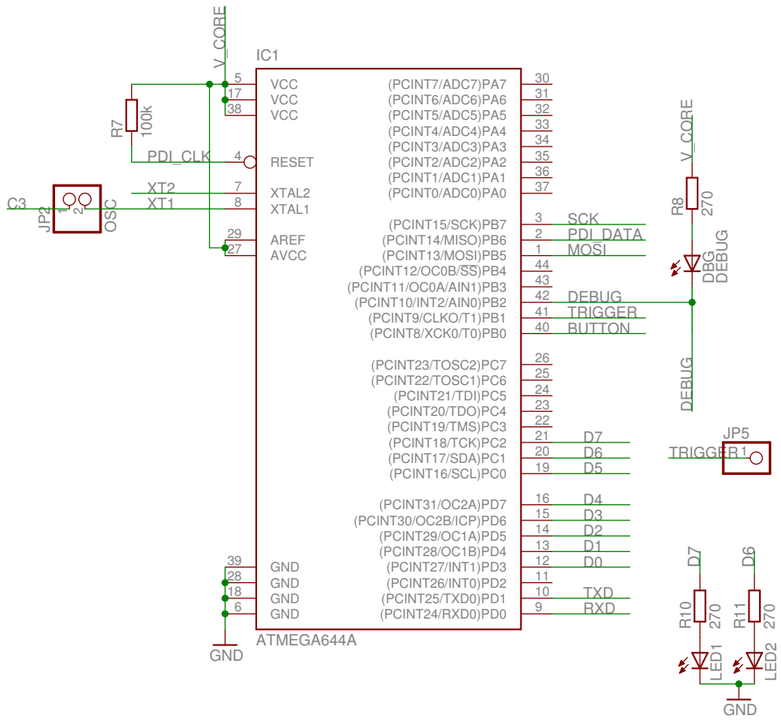

ATMega644V with debug LED and trigger out

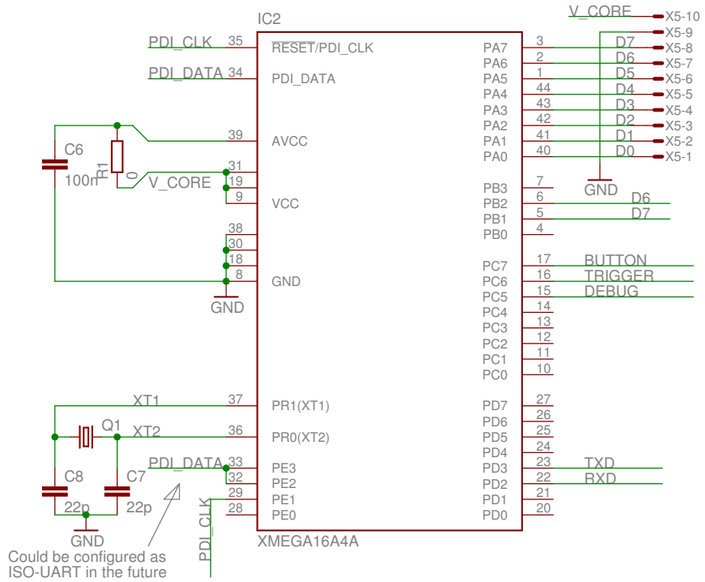

XMega16A4 / XMega32A4 with extension port

Logo

Spare

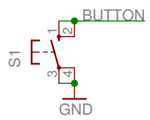

Button

List of changes:

D6 / D7 are connected to ADC / DAC pins now.
This enables, e.g., adding a microphone and a speaker.

Added LED1 and LED2 to have red or green LEDs next to the button.

Fixed HW bug: MOSI(PDI_DATA) and MISO have been interchanged. Fixed now.

AREF & AVDD was not shorted to Vdd. Fixed now.

chipkarte_atm
5/24/11 4:47 PM
Sheet: 1/1