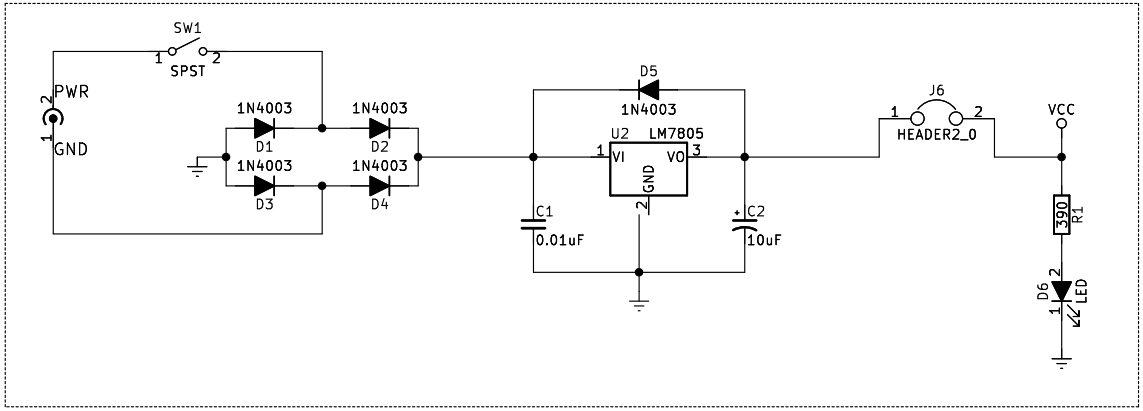

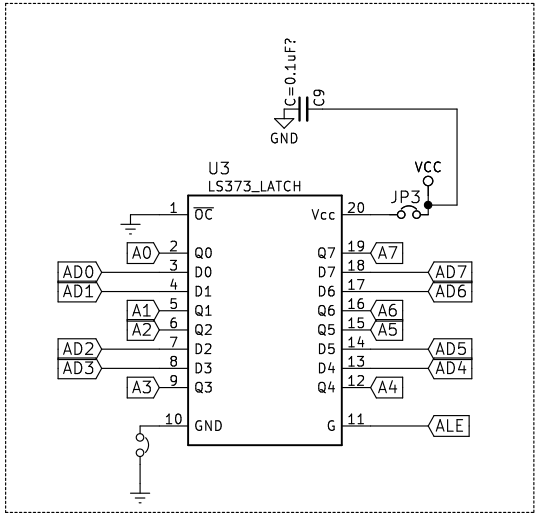

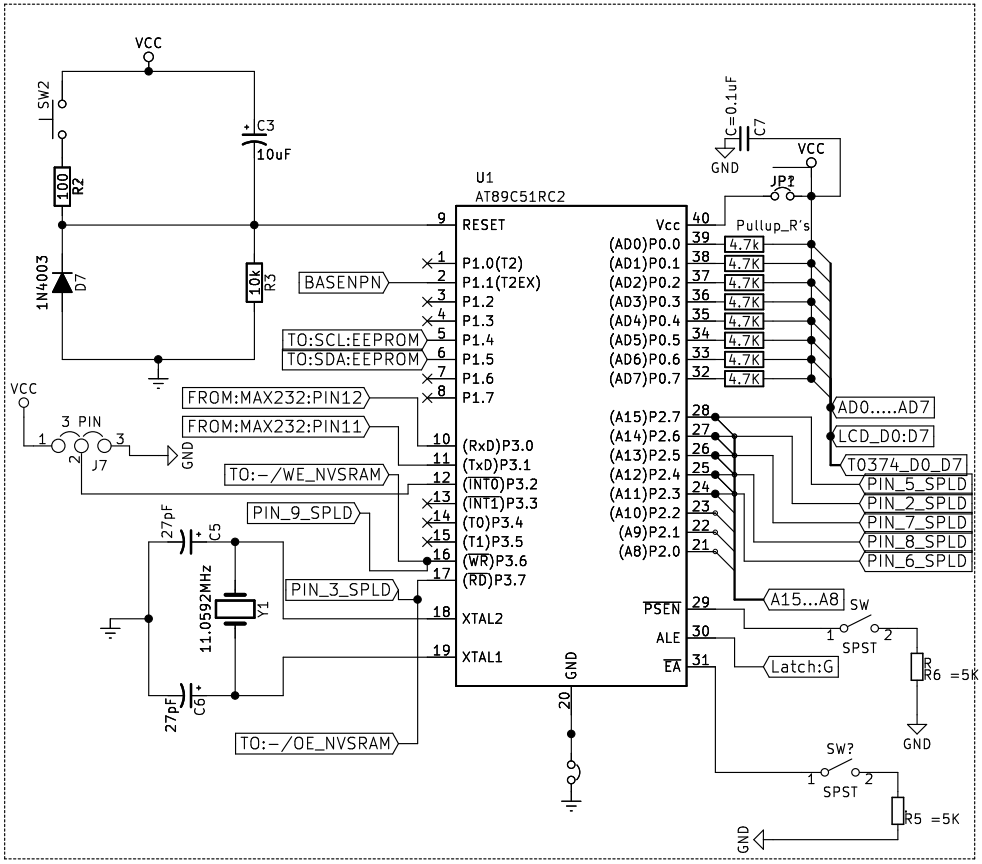

Sheet: EEPROM ,MAX232, LATCH374,RS232,LCD,EEPROM

Sheet: LED

File: LED.sch

File: EEPROM.sch

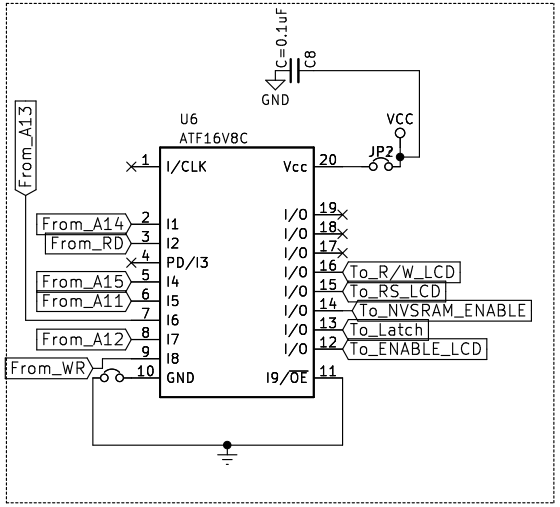

Gautham_Schematics_Lab_4

Sheet: /
File: LAB1_Schematics.sch

Title: ESDFALL2017_LAB1

Size: A4	Date: 11/10/2017	Rev:
KiCad E.D.A. kicad 4.0.7		Id: 1/3

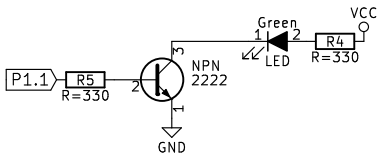

Gautham_schematics_Lab2

Sheet: /LED/
File: LED.sch

Title:

Size: A4	Date:	**Rev:**
KiCad E.D.A. kicad 4.0.7		Id: 2/3

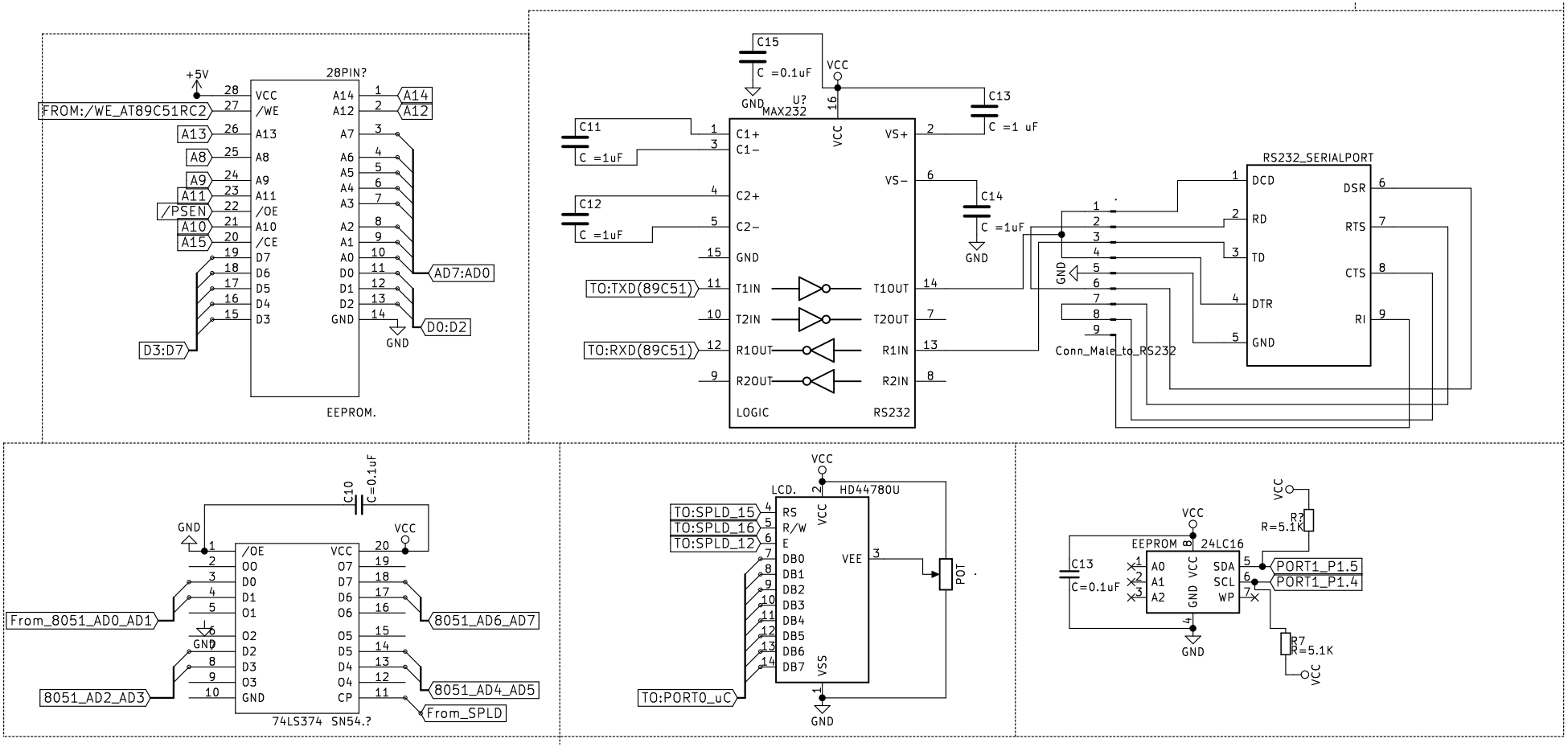

Gautham_schematics_Lab4

Sheet: /EEPROM ,MAX232, LATCH374,RS232,LCD,EEPROM/
File: EEPROM.sch

Title:

Size: A4	Date: 11/10/2017	**Rev:**
KiCad E.D.A. kicad 4.0.7		Id: 3/3