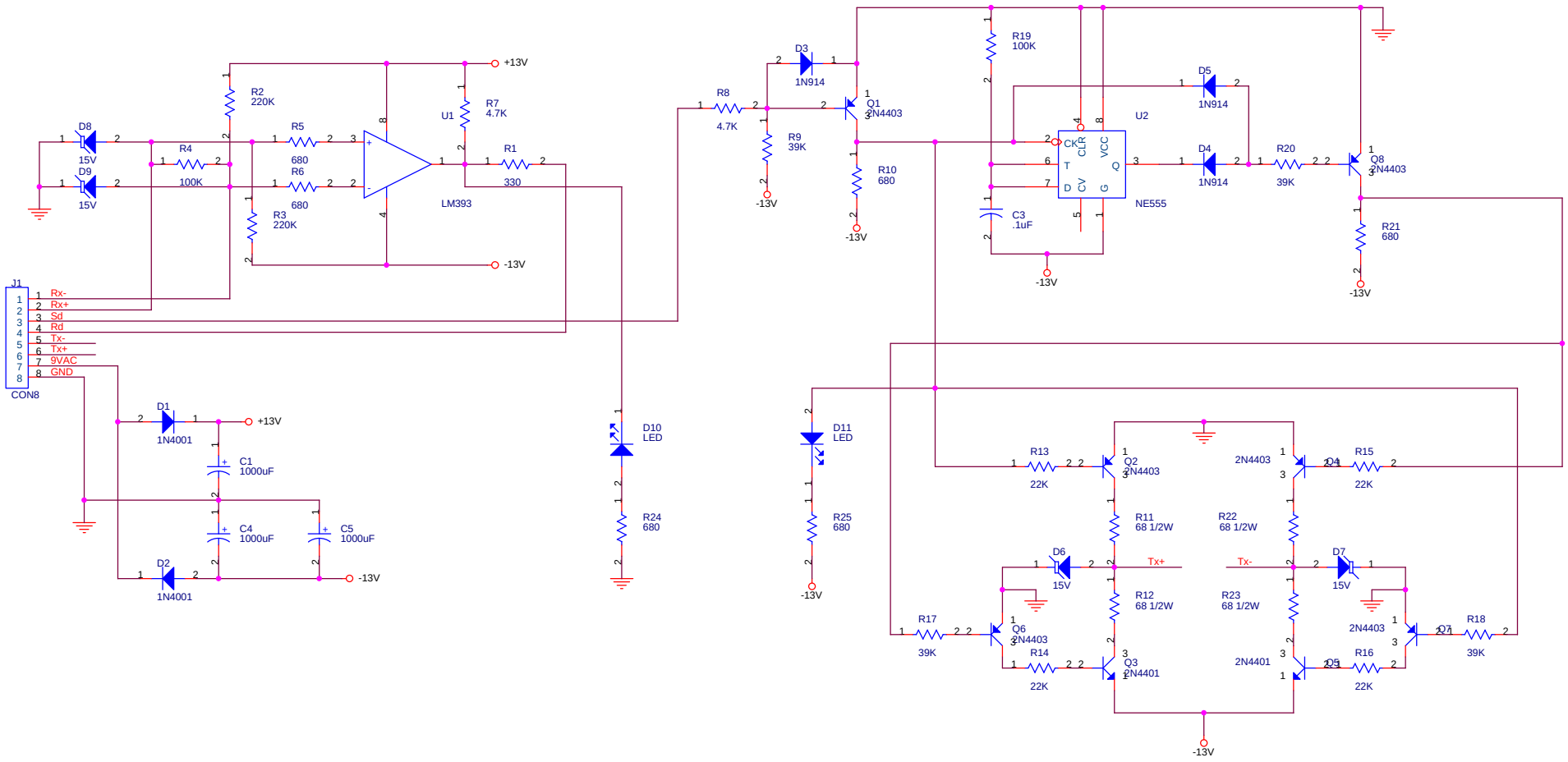

Joe Allen		
Title	Line Driver	
Size B	Document Number	Rev
Date: Wednesday, November 18, 2015	Sheet 1 of 1	