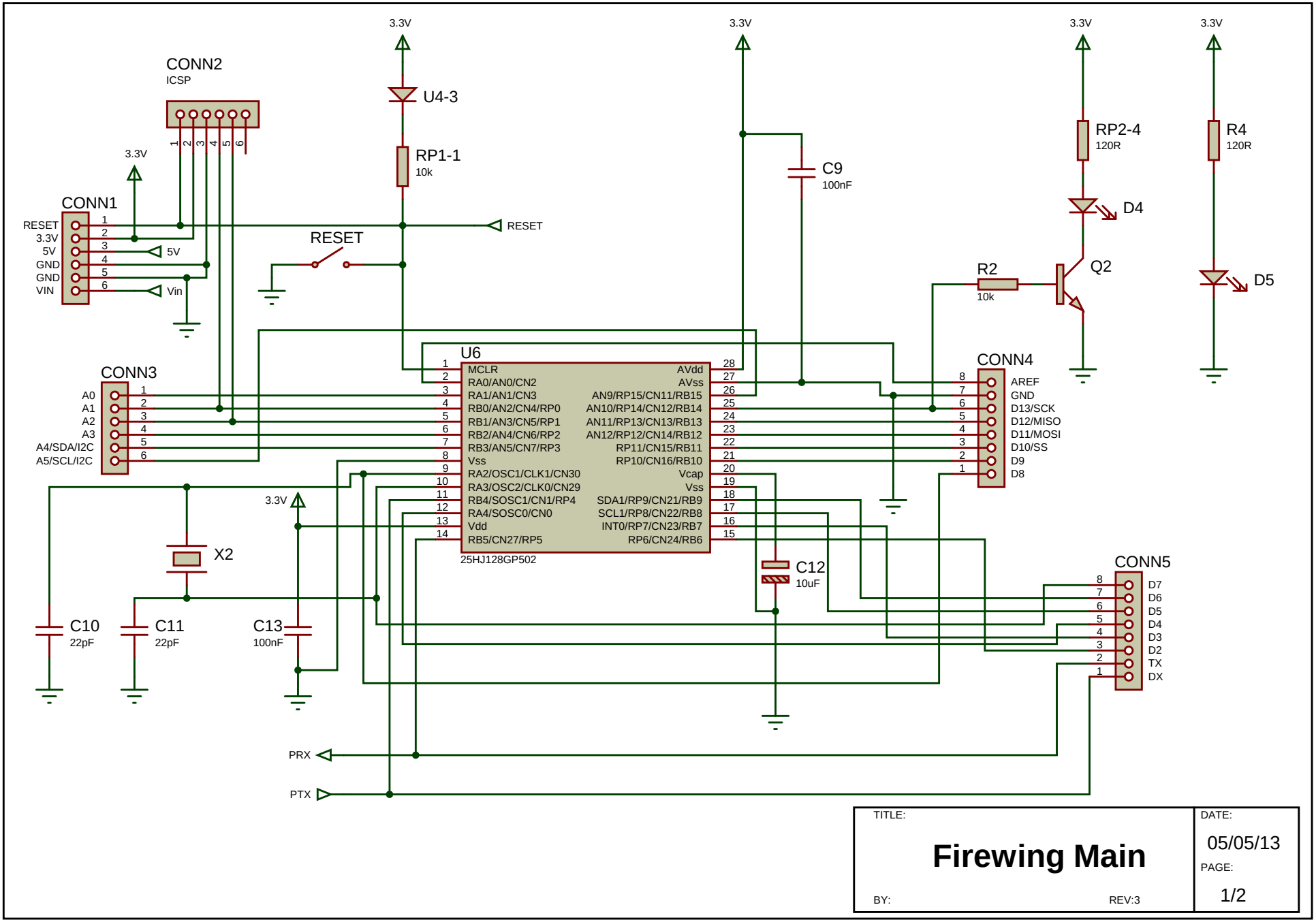
CONN2
ICSP
3.3V
U4-3
RP1-1
10k
C9
100nF
RP2-4
120R
R4
120R
D4
D5
CONN1
RESET
3.3V
5V
GND
GND
VIN
Vin
RESET
R2
10k
Q2
U6
MCLR
RA0/AN0/CN2
RA1/AN1/CN3
RB0/AN2/CN4/RP0
RB1/AN3/CN5/RP1
RB2/AN4/CN6/RP2
RB3/AN5/CN7/RP3
Vss
RA2/OSC1/CLK1/CN30
RA3/OSC2/CLK0/CN29
RB4/SOSC1/CN1/RP4
RA4/SOSC0/CN0
Vdd
RB5/CN27/RP5
AVdd
AVss
AN9/RP15/CN11/RB15
AN10/RP14/CN12/RB14
AN11/RP13/CN13/RB13
AN12/RP12/CN14/RB12
RP11/CN15/RB11
RP10/CN16/RB10
Vcap
Vss
SDA1/RP9/CN21/RB9
SCL1/RP8/CN22/RB8
INT0/RP7/CN23/RB7
RP6/CN24/RB6
25HJ128GP502
CONN3
A0
A1
A2
A3
A4/SDA/I2C
A5/SCL/I2C
CONN4
AREF
GND
D13/SCK
D12/MISO
D11/MOSI
D10/SS
D9
D8
X2
C10
22pF
C11
22pF
C13
100nF
C12
10uF
CONN5
D7
D6
D5
D4
D3
D2
TX
DX
PRX
PTX
TITLE:
Firewing Main
BY:
REV:3
DATE:
05/05/13
PAGE:
1/2

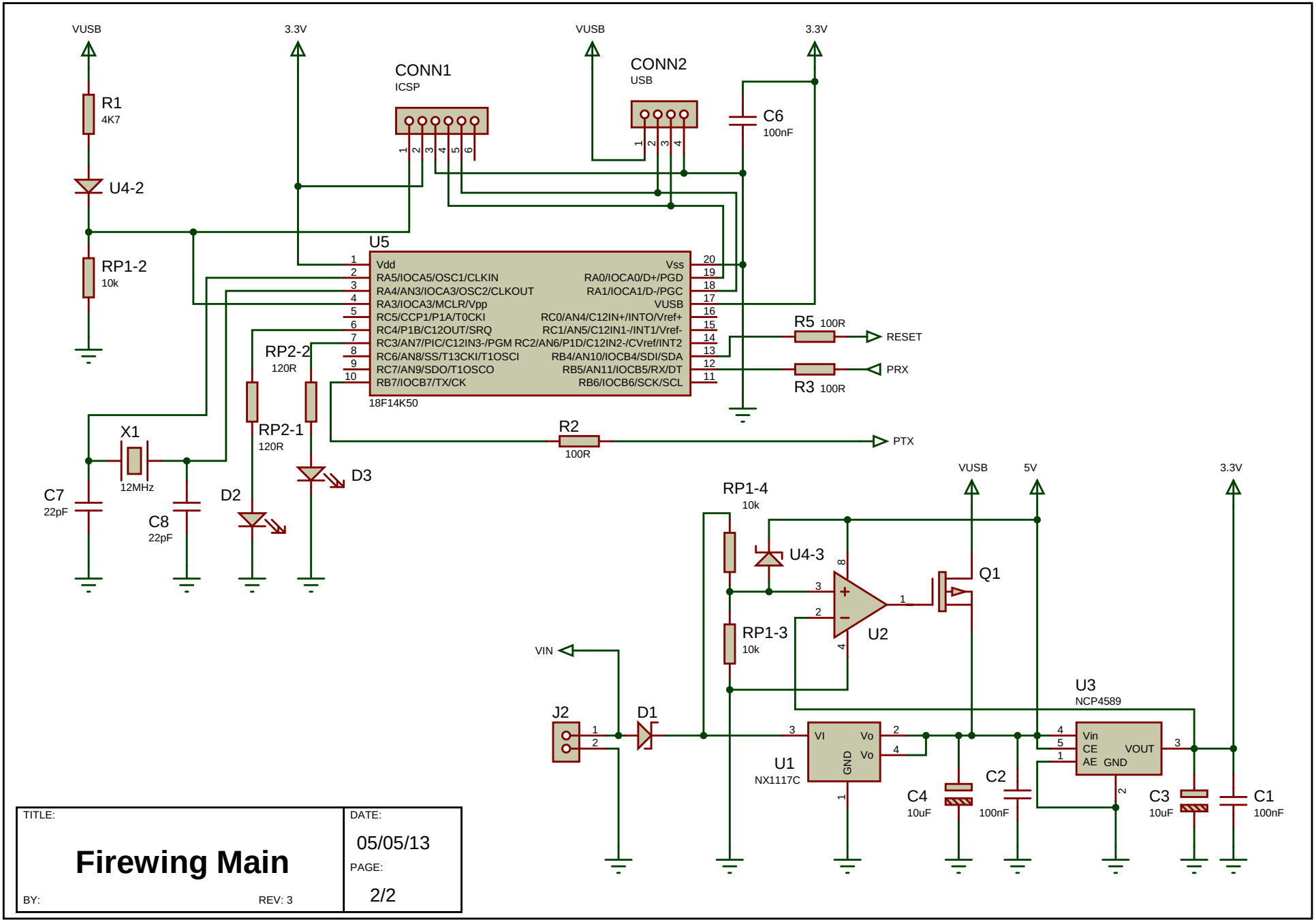
VUSB
3.3V
VUSB
3.3V
CONN1
ICSP
CONN2
USB
C6
100nF
R1
4K7
U4-2
RP1-2
10k
U5
Vdd
RA5/IOCA5/OSC1/CLKIN
RA4/AN3/IOCA3/OSC2/CLKOUT
RA3/IOCA3/MCLR/Vpp
RC5/CCP1/P1A/T0CKI
RC4/P1B/C12OUT/SRQ
RC3/AN7/PIC/C12IN3-/PGM
RC6/AN8/SS/T13CKI/T1OSCI
RC7/AN9/SDO/T1OSCO
RB7/IOCB7/TX/CK
Vss
RA0/IOCA0/D+/PGD
RA1/IOCA1/D-/PGC
VUSB
RC0/AN4/C12IN+/INTO/Vref+
RC1/AN5/C12IN1-/INT1/Vref-
RC2/AN6/P1D/C12IN2-/CVref/INT2
RB4/AN10/IOCB4/SDI/SDA
RB5/AN11/IOCB5/RX/DT
RB6/IOCB6/SCK/SCL
18F14K50
R5 100R
RESET
PRX
R3 100R
RP2-2
120R
RP2-1
120R
R2
100R
PTX
X1
12MHz
C7
22pF
C8
22pF
D2
D3
VUSB
5V
3.3V
RP1-4
10k
U4-3
Q1
U2
RP1-3
10k
VIN
J2
D1
U3
NCP4589
U1
NX1117C
VI
Vo
Vo
GND
Vin
CE
AE
VOUT
GND
C4
10uF
C2
100nF
C3
10uF
C1
100nF
TITLE:
Firewing Main
BY:
REV: 3
DATE:
05/05/13
PAGE:
2/2