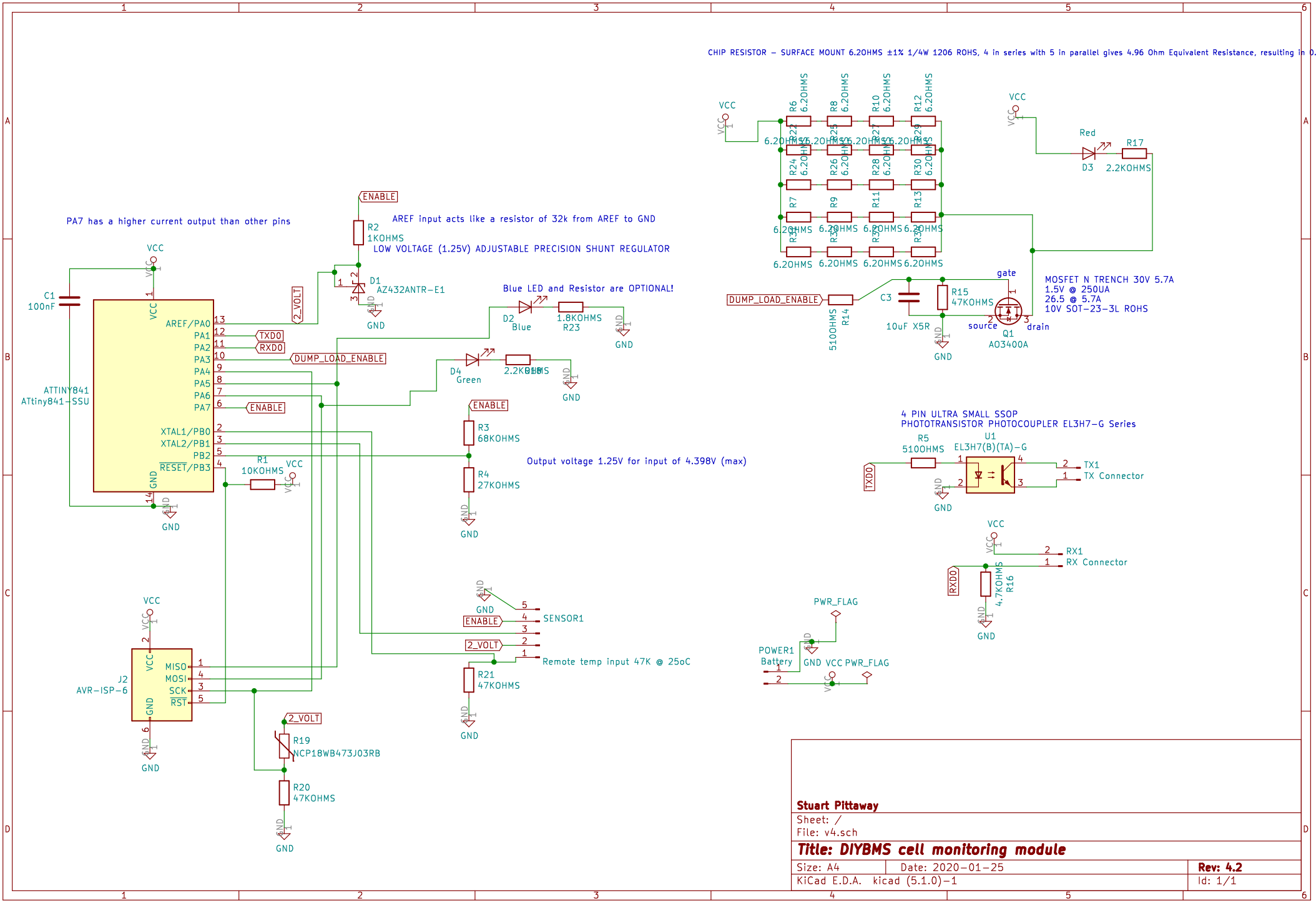
CHIP RESISTOR - SURFACE MOUNT 6.2OHMS ±1% 1/4W 1206 ROHS, 4 in series with 5 in parallel gives 4.96 Ohm Equivalent Resistance, resulting in 0.84Amps at
PA7 has a higher current output than other pins
AREF input acts like a resistor of 32k from AREF to GND
LOW VOLTAGE (1.25V) ADJUSTABLE PRECISION SHUNT REGULATOR
Blue LED and Resistor are OPTIONAL!
Output voltage 1.25V for input of 4.398V (max)
Remote temp input 47K @ 25oC
MOSFET N TRENCH 30V 5.7A
1.5V @ 250UA
26.5 @ 5.7A
10V SOT-23-3L ROHS
4 PIN ULTRA SMALL SSOP
PHOTOTRANSISTOR PHOTOCOUPLER EL3H7-G Series
ATTINY841
ATtiny841-SSU
AVR-ISP-6
Stuart Pittaway
Sheet: /
File: v4.sch
Title: DIYBMS cell monitoring module
Size: A4
Date: 2020-01-25
Rev: 4.2
KiCad E.D.A. kicad (5.1.0)-1
Id: 1/1