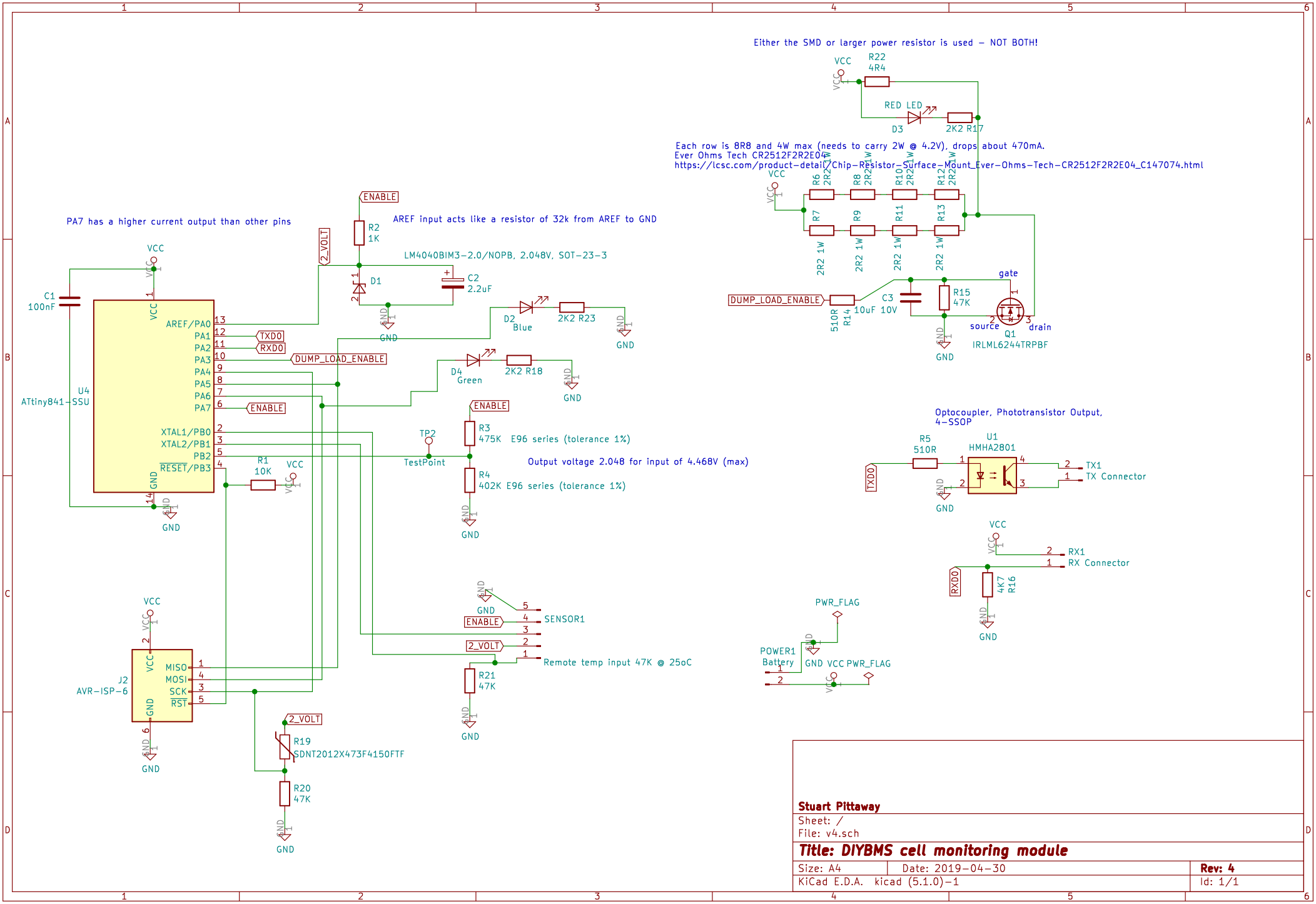

Stuart Pittaway

Sheet: /

File: v4.sch

Title: DIYBMS cell monitoring module

Size: A4	Date: 2019-04-30	**Rev: 4**
KiCad E.D.A. kicad (5.1.0)-1		Id: 1/1