Notice:

1. The dimensions marked with "A" on the picture are important inspection items. If the dimensional tolerance is not noted, the tolerance is ±0mm; 2. Lead specification: UL1332, 26AWG, high temperature resistant extra soft silicone wire, black; 3. Continuity test: 100% required No misalignment/short circuit/open circuit/poor installation/mistreating and other defects; 4. Wire requirements: no damage/crease/copper leaking and other defects in appearance; 5. Spray test: in line with EL017 and «Buy other relevant standards "Healthy cured components and power supply soft "General Safety Requirements for Lines"; 6. Comply with the company's solder test standards, no cedar at 200°C/0.5s; 7. Environmental protection requirements: comply with the latest RoHS regulations and REACH regulations; 8. Comply with the "Administrative Measures for the Restriction of the Use of Hazardous Substances in Electrical and Electronic Products" ".

The two lines are changed to parallel line A A1

Version					
mark					
change content					
date	2024/01/24				

Unsolved tolerance values for straightness and flatness: Linear tolerances are implemented according to GB/T1804-m level; geometric tolerances are implemented according to GB/T1184-K level.

L6	42	42	42	42	42	42	42	42	42	42	42
L5	>30-50	>30-50	>30-50	>30-50	>30-50	>30-50	>30-50	>30-50	>30-50	>30-50	>30-50
L4	>50-100	>50-100	>50-100	>50-100	>50-100	>50-100	>50-100	>50-100	>50-100	>50-100	>50-100
L3	>100-200	>100-200	>100-200	>100-200	>100-200	>100-200	>100-200	>100-200	>100-200	>100-200	>100-200
L2	>200-400	>200-400	>200-400	>200-400	>200-400	>200-400	>200-400	>200-400	>200-400	>200-400	>200-400
L1	>400-800	>400-800	>400-800	>400-800	>400-800	>400-800	>400-800	>400-800	>400-800	>400-800	>400-800

batch review											
allow											
count											
Number	1	2	3	4	5	6					
trace											
describe		Tube	set Tube	set Tube	set Tube	set Tube					
2024/01/29		100K+-1% 4x0603	[illegible]	[illegible]	[illegible]	[illegible]					
						wire					

Jie Xinhua Technology Co., Ltd.

stage mark						
quantity	1					
weight						
Proportion	1:1					
name	Drawing number model material					
Hot bed thermal SV05P tinned copper	JXHSV05P-08038-g					
quantity	1	2	2	2	1	2
unit	PCS	PCS	PCS	PCS	PCS	PCS

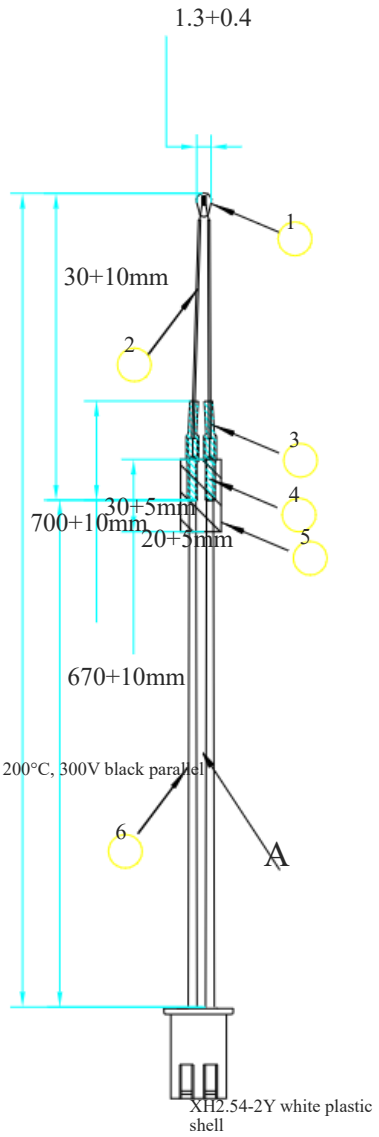

heated bed thermal

Material coding	Version
	Book
20030200857 1	A1