A0 version item code 200402008605

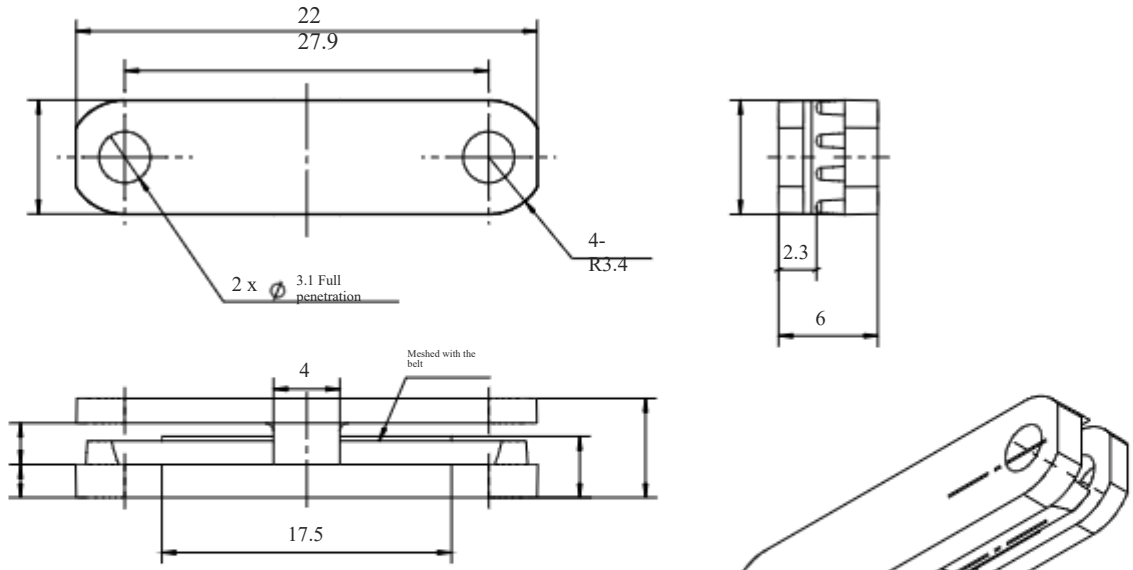

Technical requirements: 1. Fire rating: the material is flame retardant, and it will be automatically extinguished within 10 seconds after leaving the open flame; 2. All materials use 100% new materials,

3. All materials must be sampled before they can be produced; 4. The appearance surface is frosted, and the texture refers to the model; 5. The product cannot be deformed, and surface defects such as strain, shrinkage and air streaks are not allowed; 6. The surface of the parts is clean, free of oil, chips, dust, etc.

7. The surface should be protected from scratches, bruises, crushes, deformation and other defects. 8. Comply with the latest RoHS regulations; 9. The size is not inscribed, refer to the 3D drawing;

10. Material color:

black;

version	mark	What's Changed	date

The linear tolerance is implemented according to GB/T1804-m level, and the geometric tolerance is implemented according to GB/T1184-K level

The value of the extreme deviation of the linear basic size segment	> 6 ~ 30	> 30 ~ 120 ~ 400	> 120	> 400 ~ 1000	> 1000 ~ 2000	> 2000 ~ 4000
	±0.2	±0.3	±0.5	±0.8	±1.2	±2
Unmarked tolerance values for straightness and flatness	≤10	> 10 ~ 30	> 30 ~ 100 ~ 300	> 100	> 300 ~ 1000	> 1000 ~ 3000
	0.05	0.1	0.2	0.4	0.6	0.8

Design	Xiao Zepeng	2024/2/28	Jiexinhua Technology Co., Ltd					Figure No.	ABS+PC SV05P
Audit								Model Material	
Ratification			Stage markers		quantity	weight	proportion		JXHSV05P-06025-d
	1 in total	Picture 1			1		2:1	name	皮带压块2