Material coding

Version

Book

200302008577

A2

Notice:

1. The dimensions with "*" in the picture are important inspection items; 2. Lead specifications: UL3332, 26AWG, high temperature resistant extra soft silicone wire, black; 3. Continuity test: Requires 100% no miss alignment/short circuit/open circuit/insulation Defects/miswiring and other defects; 4. Wire requirements: no damage/creases/copper leakage in appearance; 5. Swing test: complies with the "General Safety Requirements for Soft Cord Components and Power Cords" stipulated in relevant standards such as UL817; 6. Comply with the company's solder test standards, no odor at 200°C/0.5h; 7. Environmental protection requirements: Comply with the latest RoHS regulations and REACH regulations; 8. Comply with the "Administrative Measures for the Restriction of the Use of Hazardous Substances in Electrical and Electronic Products";

version A Tolerance changed to ±0.05 B A2

mark A1 Original size is 65mm, lengthened to 75mm

change content

date 2024/01/24 2024/03/08

Uncoated tolerance: Values for straightness and flatness are implemented according to GB/T1804-m level; geometric tolerances are implemented according to GB/T1184-K level.

6.05	≤10	±0.3	>6~30			
6.1	>10~30	±0.3	>30~120			
6.2	>30~100	±0.5	>120~400			
6.4	>100~200	±0.8	>400~1000			
6.6	>200~1000	±1.2	>1000~2000			
6.8	>1000~3000	±2	>2000~4000			

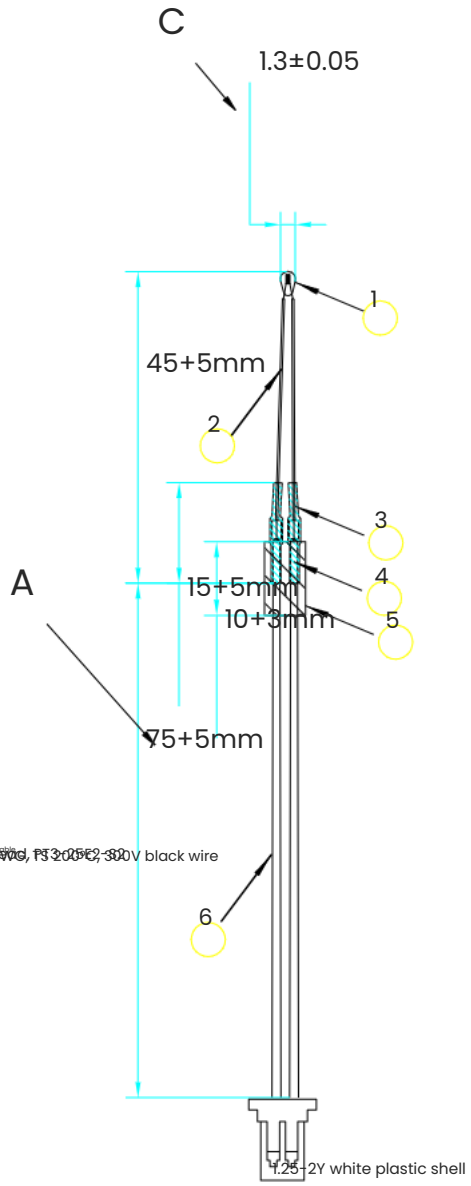

Nozzle ther

batch view set up sequence

allow count Number 2 3 4 5 6

common McConnell trace Resistor headgear set set set set

open describe Tube Tube Tube Tube Tube

2024/03/08 100K±1%, 3950K, 5mm black tube, 26AWG, FS 200°C, 300V black wire

No. open

Jie Xinhua Technology Co., Ltd.

stage mark

quantity mold Number

1

weight

Proportion

1:1

name drawing number model material

JXHSV05P-06033-f

Nozzle thermistor SV05P

quantity 1 2 2 2 1 1

unit PCS PCS PCS PCS PCS PCS