Material coding

Version

Book

200604008570

A0

Version

mark

change content

date

Unsolved tolerance values for straightness and flatness: Linear tolerances are implemented according to GB/T1804-m level; geometric tolerances are implemented according to GB/T1184-K level.

H2N-H4NB-24V-NPN

-Normally closed detection distance 2mm;

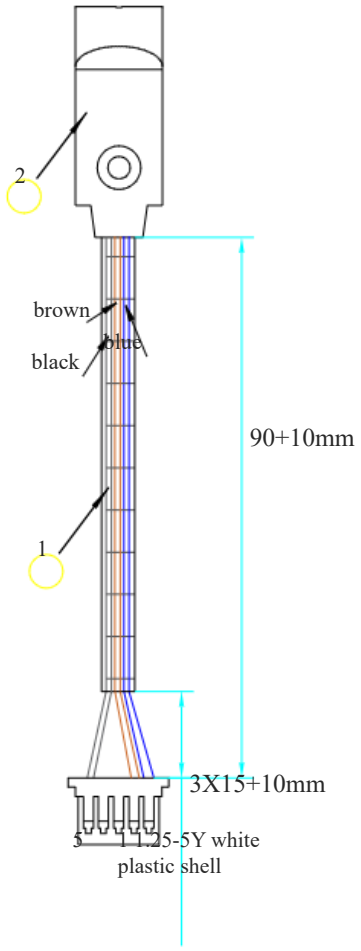

Proximity switch
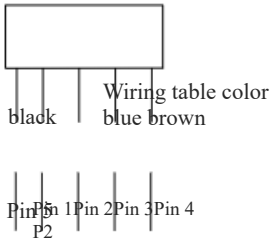
	batch review					
	allow	count	Number			2
		McConnell	trace	Wire		Proximity switch
open			describe	material		
No. open		2023/11/24	Proximity switch H2N-H4NB-24V-NPN-normally closed			
	Jie Xinhua Technology Co., Ltd.					
	stage mark					
			mold Number			
1	quantity					
	weight					
1:1	Proportion					
name	Drawing number model material					
Proximity switch SV05P	JXHSV05P-06040-f	quantity	90mm			1
		unit	mm			PCS