A1 version material code 200402008618

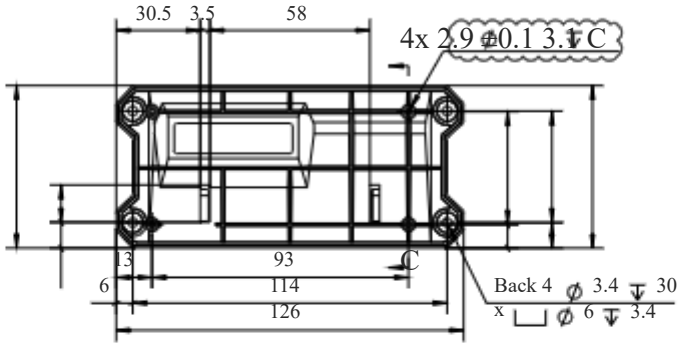

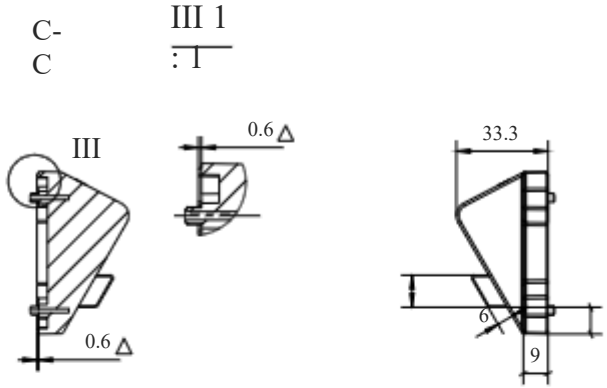

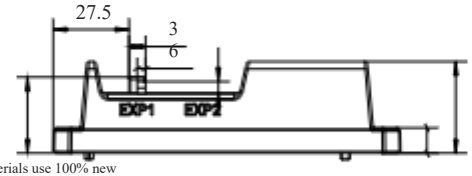

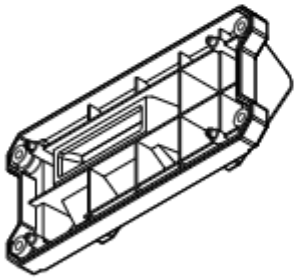

Technical requirements: 1. All materials use 100% new materials. 2. All materials must be sample confirmed before production; 3. The appearance is frosted, and the texture refers to the sample; 4. The product cannot be deformed, and no strains, shrinkage or air marks are allowed. and other surface defects; 5. The surface of the parts is clean and free of oil, chips, dust, etc.6. The surface is protected from scratches, bumps, bruises, deformation and other defects.
7. Comply with the latest RoHS regulatory requirements; 8. No dimensions are noted, refer to the 3D drawings; 9. Material color: gray 10. Dimensions marked with △ are key dimensions

A1		1. Modify the size in 1 place.	2024.3.30
Version	mark	change content	date

Linear tolerances are implemented according to GB/T1804-m level, geometric tolerances are implemented according to GB/T1184-K level.

Limit deviation values for linear basic size segments	> 6 ~ 30	> 30 ~ 120 ~ 400	> 120	> 400 ~ 1000	> 1000 ~ 2000	> 2000 ~ 4000
	±0.2	±0.3	±0.5	±0.8	±1.2	±2
Unspecified tolerance values for straightness and flatness	≤10	> 10 ~ 30	> 30 ~ 100 ~ 300	> 100	> 300 ~ 1000	> 1000 ~ 3000
	0.05	0.1	0.2	0.4	0.6	0.8

design	Xiao Zepeng	2024/3/30	Jie Xinhua Technology Co., Ltd.				Drawing number	ABS+PC SV05P
review							model material	
approve			stage mark	quantity	weight	Proportion		JXHSV05P-07602-d
	1 in total	Picture 1		1		1:2	name	screen cover