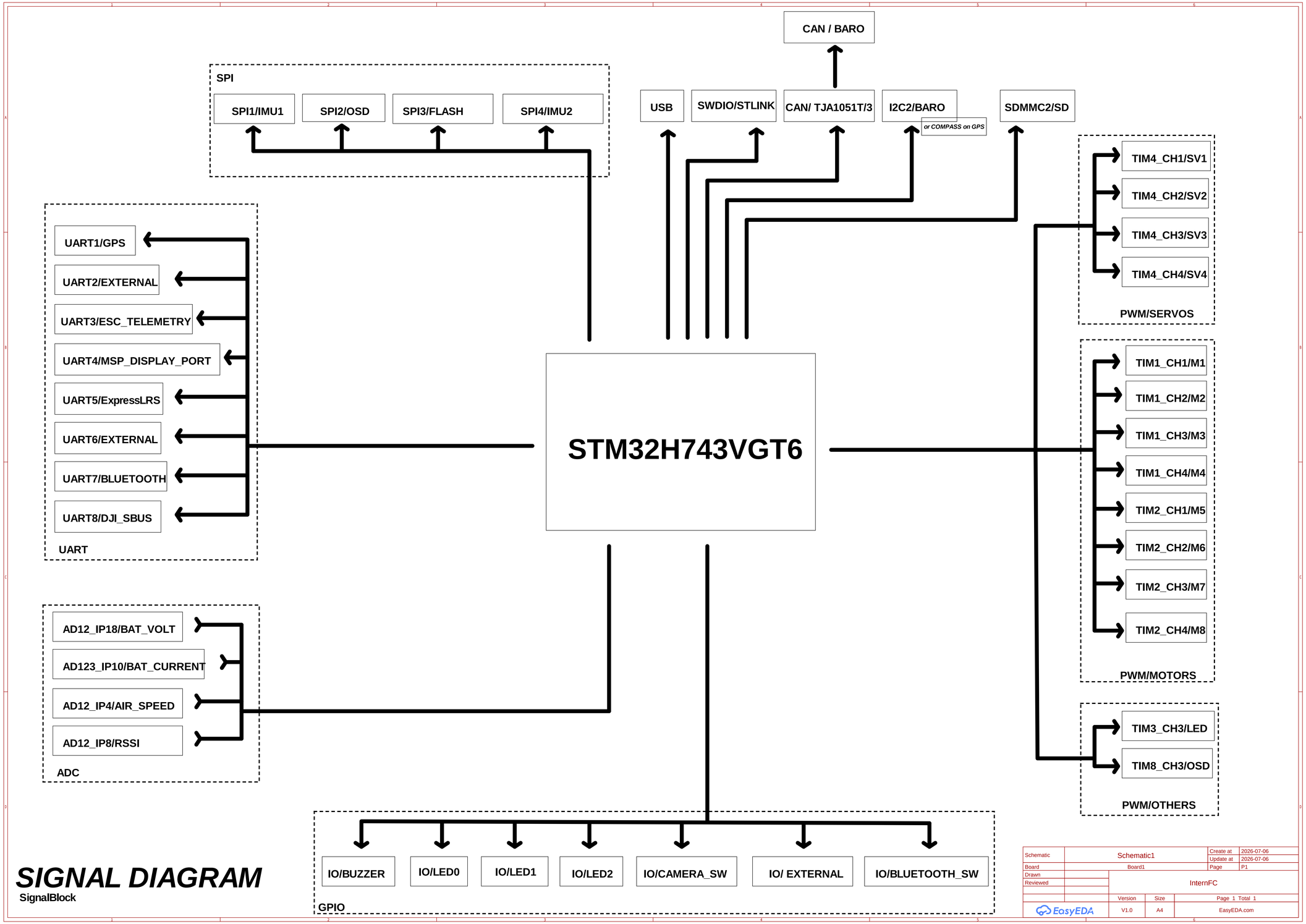

SIGNAL DIAGRAM

SignalBlock

Schematic	Schematic1	Create at	2026-07-06
Board	Board1	Update at	2026-07-06
Drawn		Page	P1
Reviewed			
		InternFC	
	Version	Size	Page 1 Total 1
EasyEDA	V1.0	A4	EasyEDA.com

STM32H743Pro

Wiring diagram

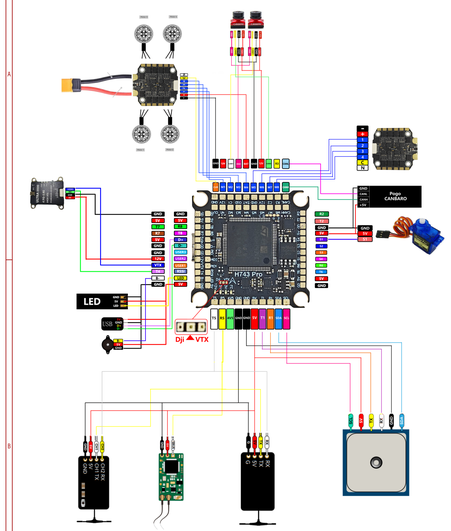

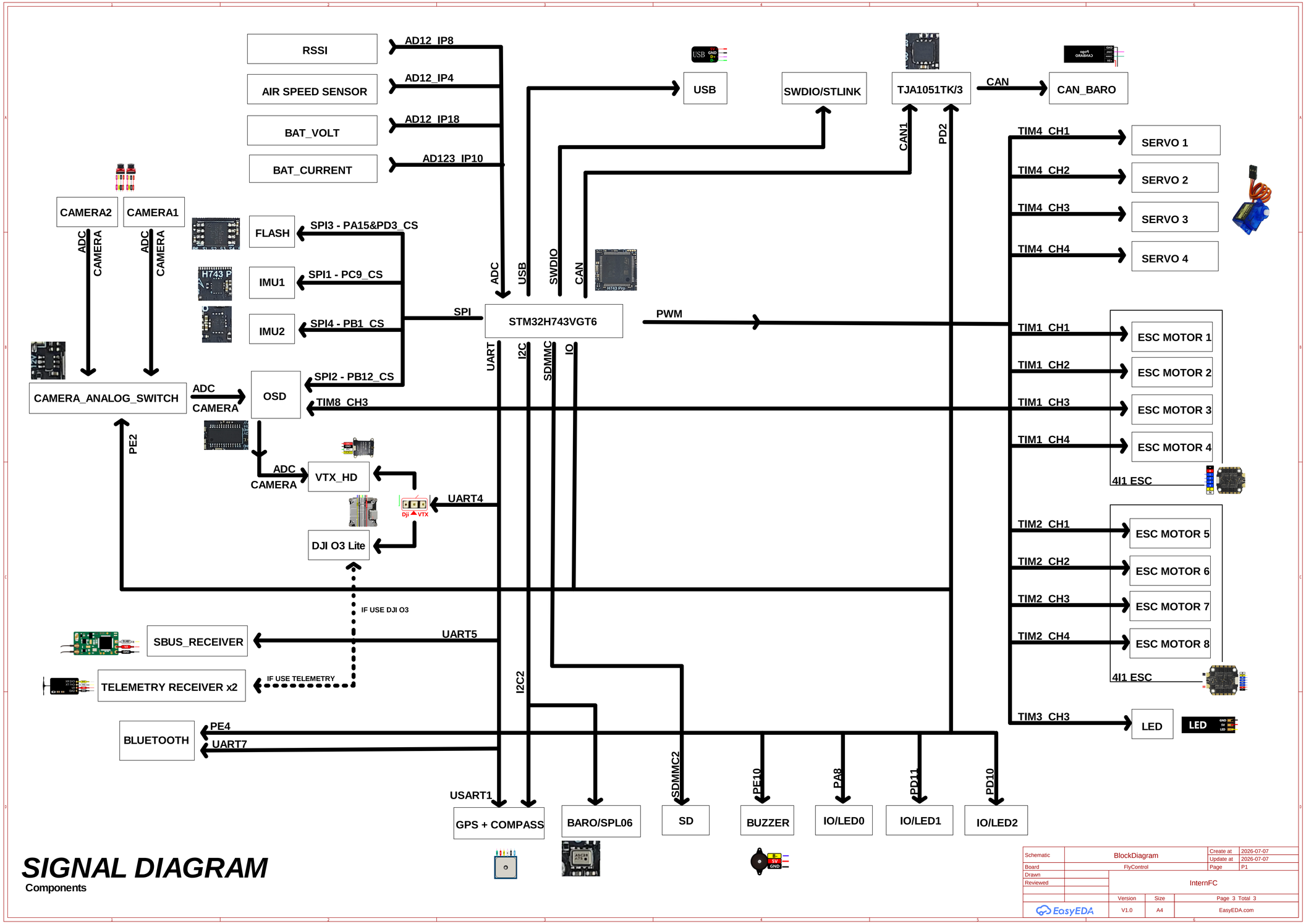

SIGNAL DIAGRAM

Components

Schematic	BlockDiagram	Create at	2026-07-07
Board	FlyControl	Update at	2026-07-07
Drawn		Page	P1
Reviewed	InternFC		
	Version	Size	Page 3 Total 3
EasyEDA	V1.0	A4	EasyEDA.com

STM32H743Pro

Wiring diagram

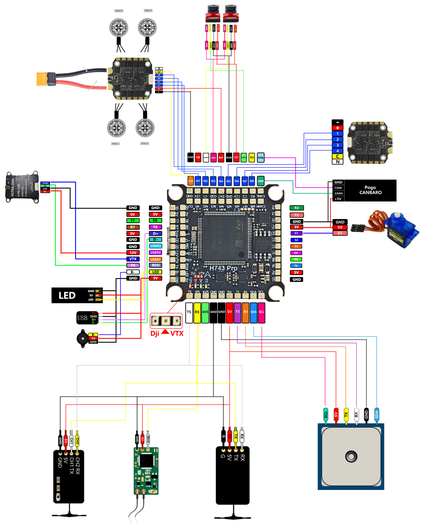

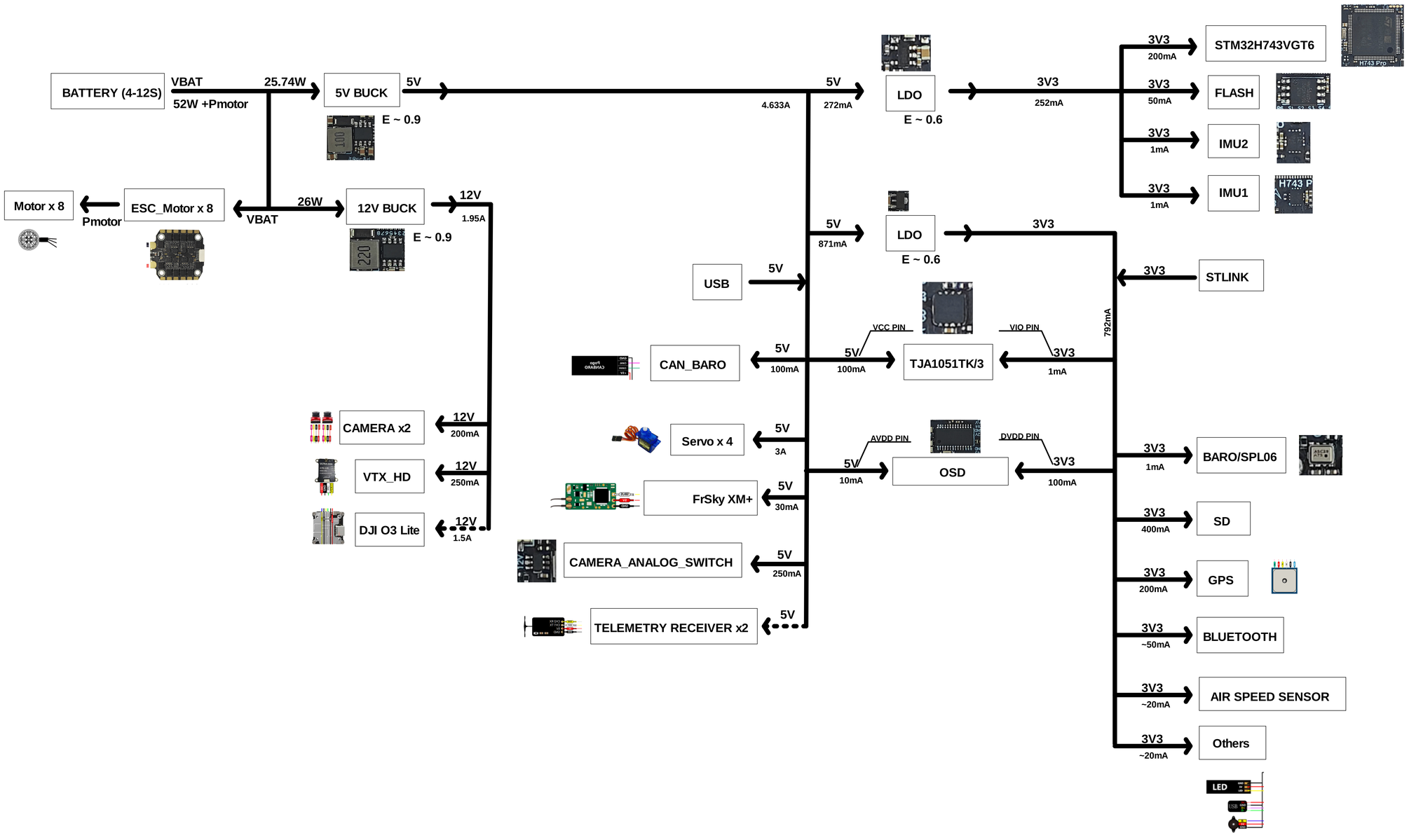

POWER DIAGRAM

Schematic	BlockDiagram	Create at	2026-07-06
		Update at	2026-07-06
Board	Board1	Page	P2
Drawn	InternFC		
Reviewed			
	Version	Size	Page 2 Total 2
EasyEDA	V1.0	A4	EasyEDA.com

STM32H743Pro

Wiring diagram

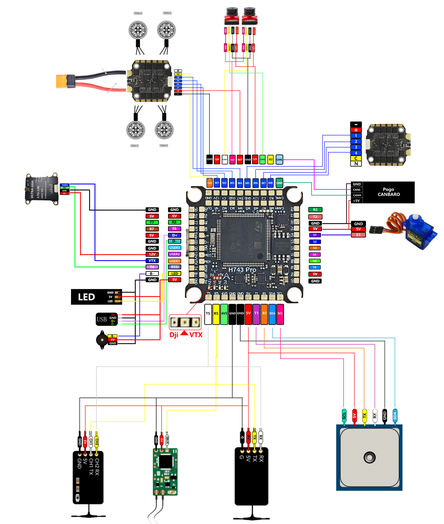

STM32H743Pro

Wiring diagram

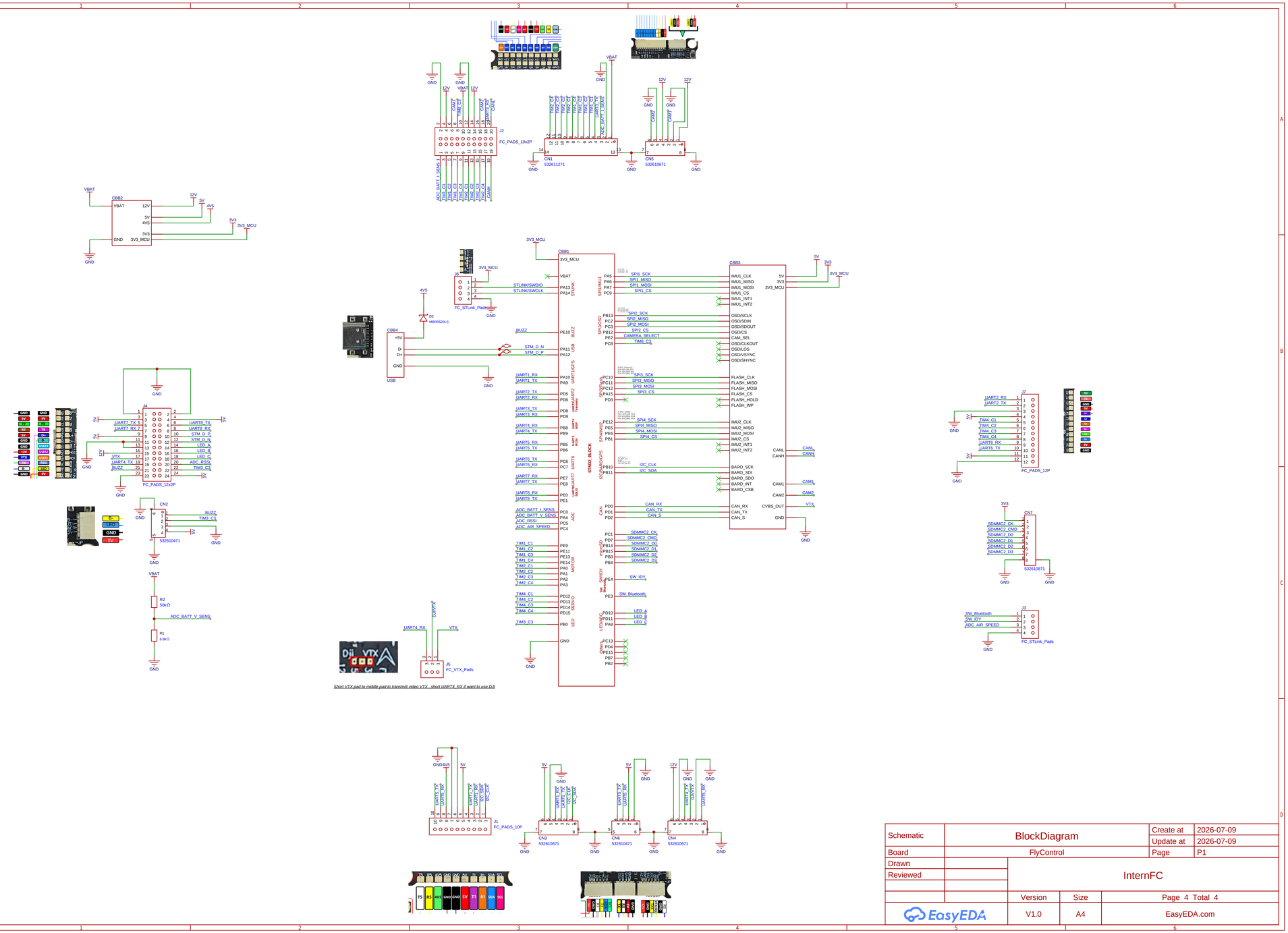

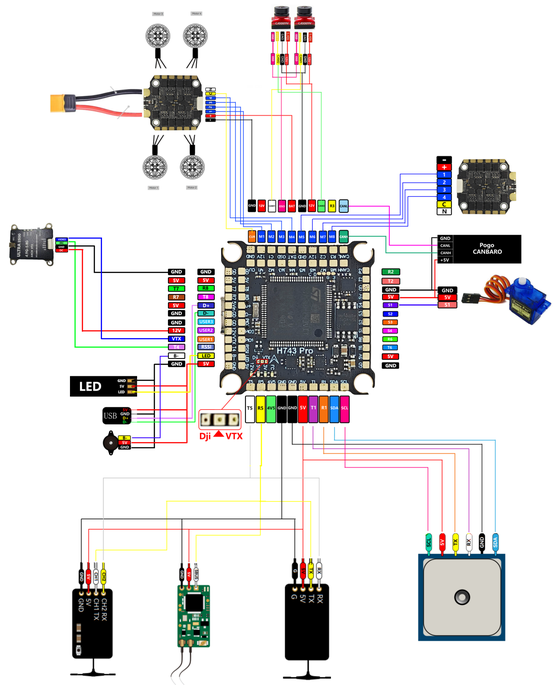

Schematic	BlockDiagram	Create at	2026-07-09
Board	FlyControl	Update at	2026-07-09
Drawn		Page	P1
Reviewed			
		InternFC	
	Version	Size	Page 4 Total 4
EasyEDA	V1.0	A4	EasyEDA.com

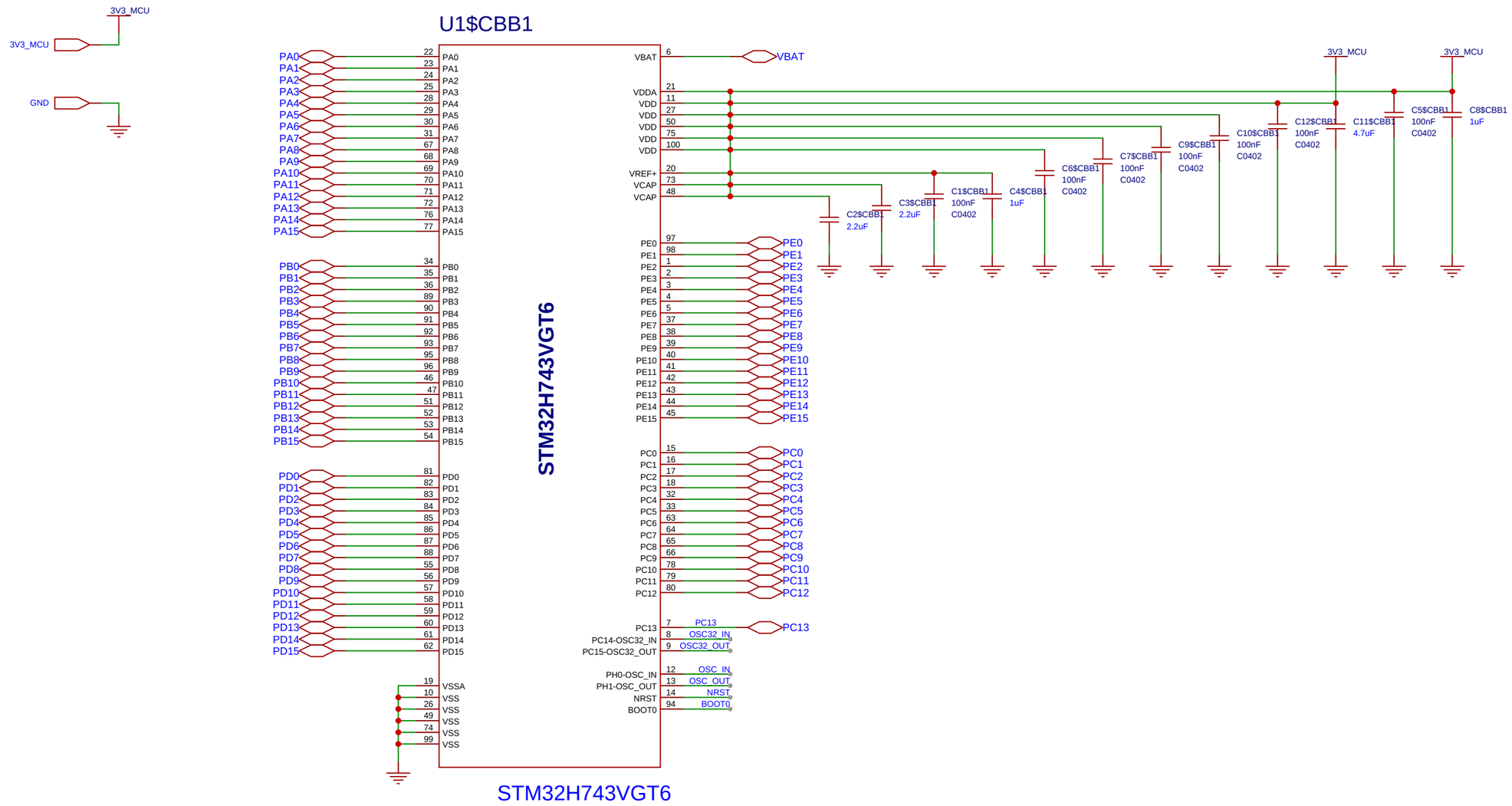

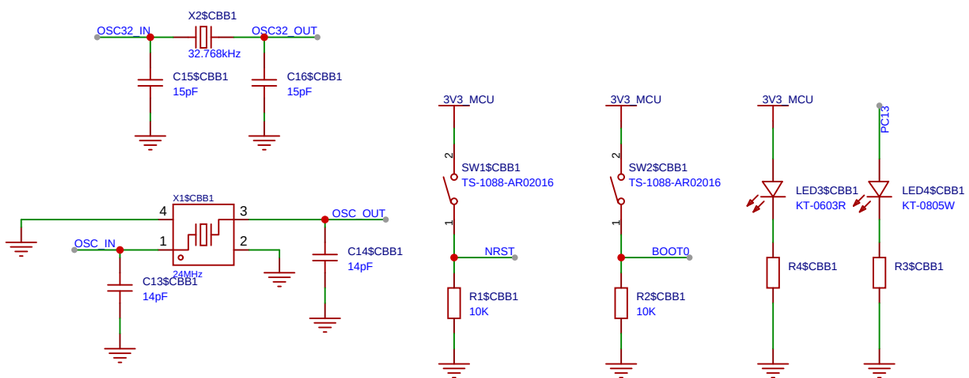

6.1.6 Power supply scheme

Figure 15. Power supply scheme

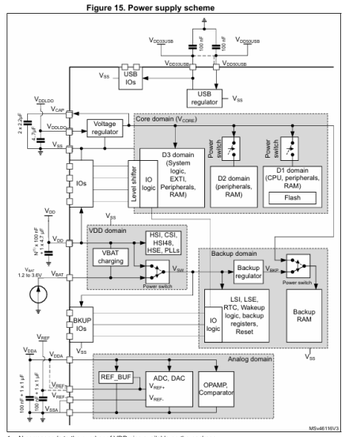

1. N corresponds to the number of VDD pins available on the package.
2. A tolerance of +/- 20% is acceptable on decoupling capacitors.

Caution: Each power supply pair (V_{DD}/V_{SS}, V_{DDA}/V_{SSA} ...) must be decoupled with filtering ceramic capacitors as shown above. These capacitors must be placed as close as possible to, or below, the appropriate pins on the underside of the PCB to ensure good operation of the

Schematic	Schematic2	Create at	2026-07-10
		Update at	2026-07-10
Board		Page	P1
Drawn	InternFC		
Reviewed			
		Version	Size	Page 1 Total 1
EasyEDA		V1.0	A4	EasyEDA.com

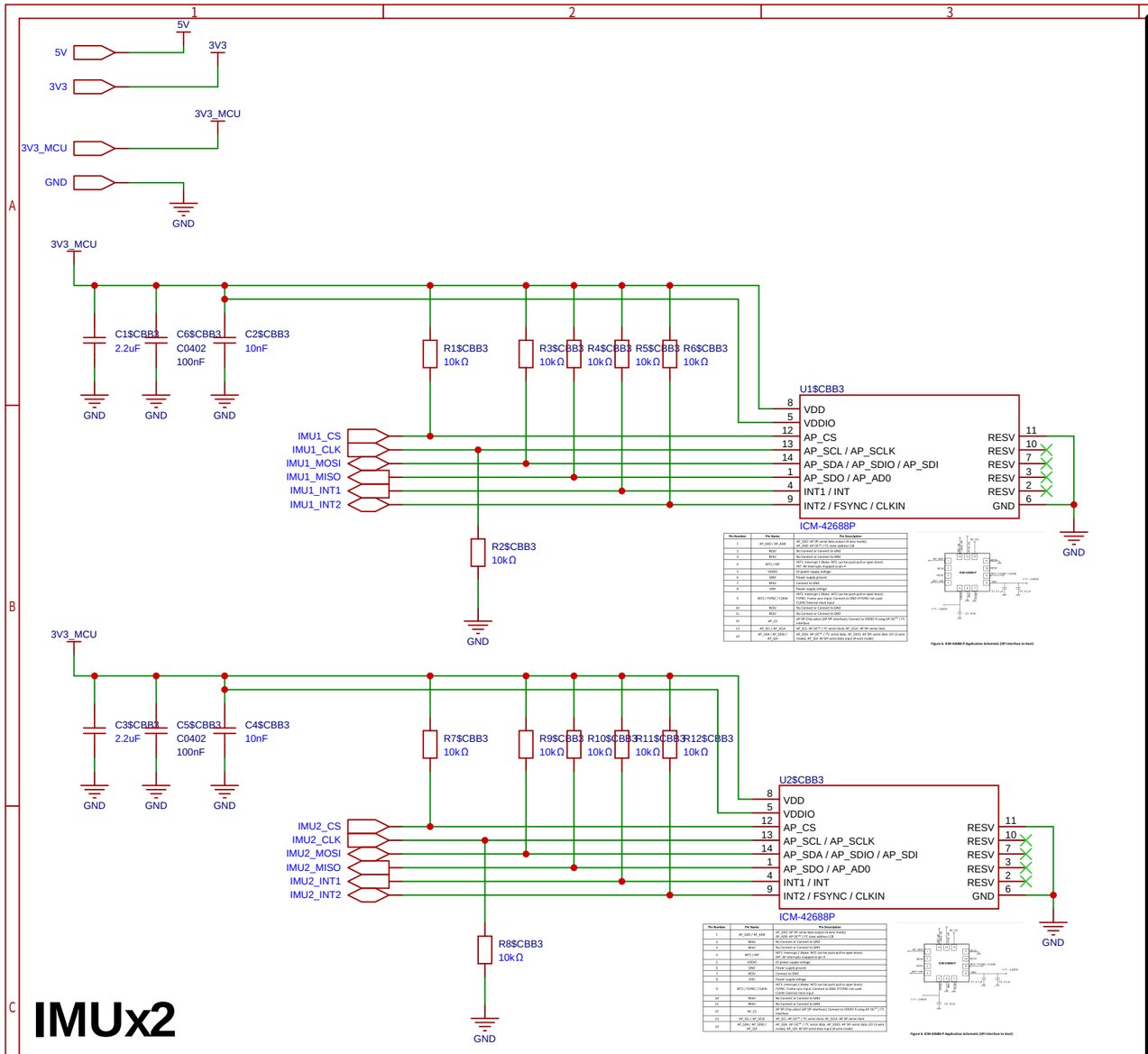

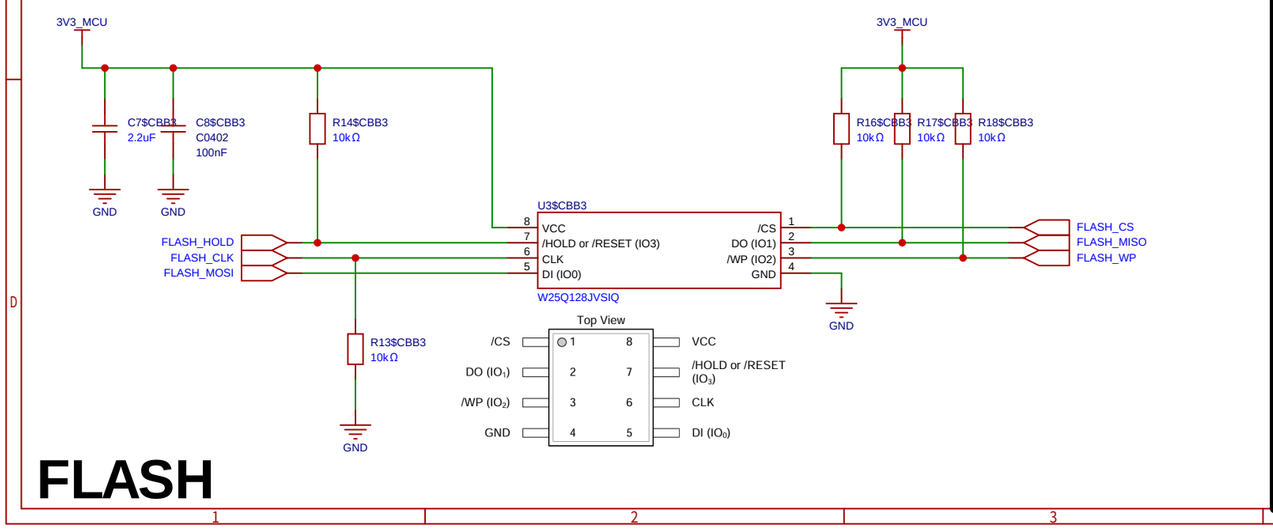

OSD & ANALOG SWITCH

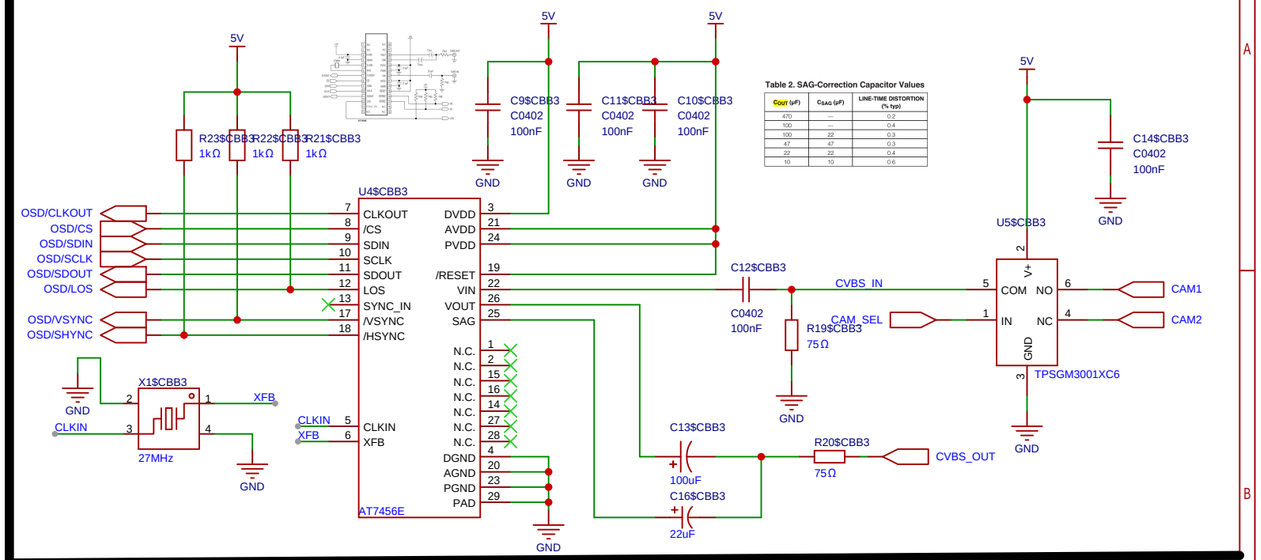

Table 2. SAG-Correction Capacitor Values

C_{OUT} (µF)	C_{SAG} (µF)	LINE-TIME DISTORTION (% typ)
470	—	0.2
100	—	0.4
100	22	0.3
47	47	0.3
22	22	0.4
10	10	0.6

CAN IC

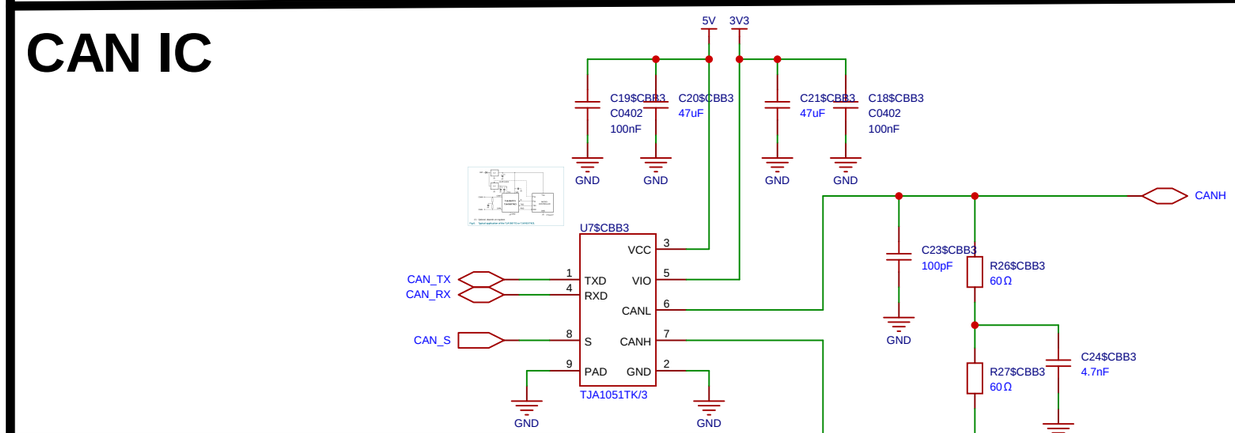

BARO

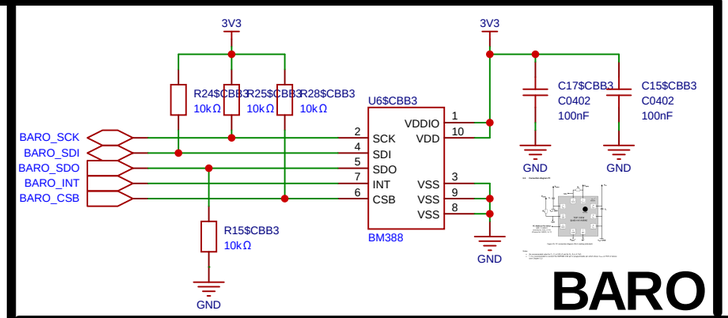

Schematic	Schematic2	Create at	2026-07-17
		Update at	2026-07-17
Board		Page	P1
Drawn	InternFC		
Reviewed			
		Version	Size	Page 1 Total 1
EasyEDA		V1.0	A4	EasyEDA.com

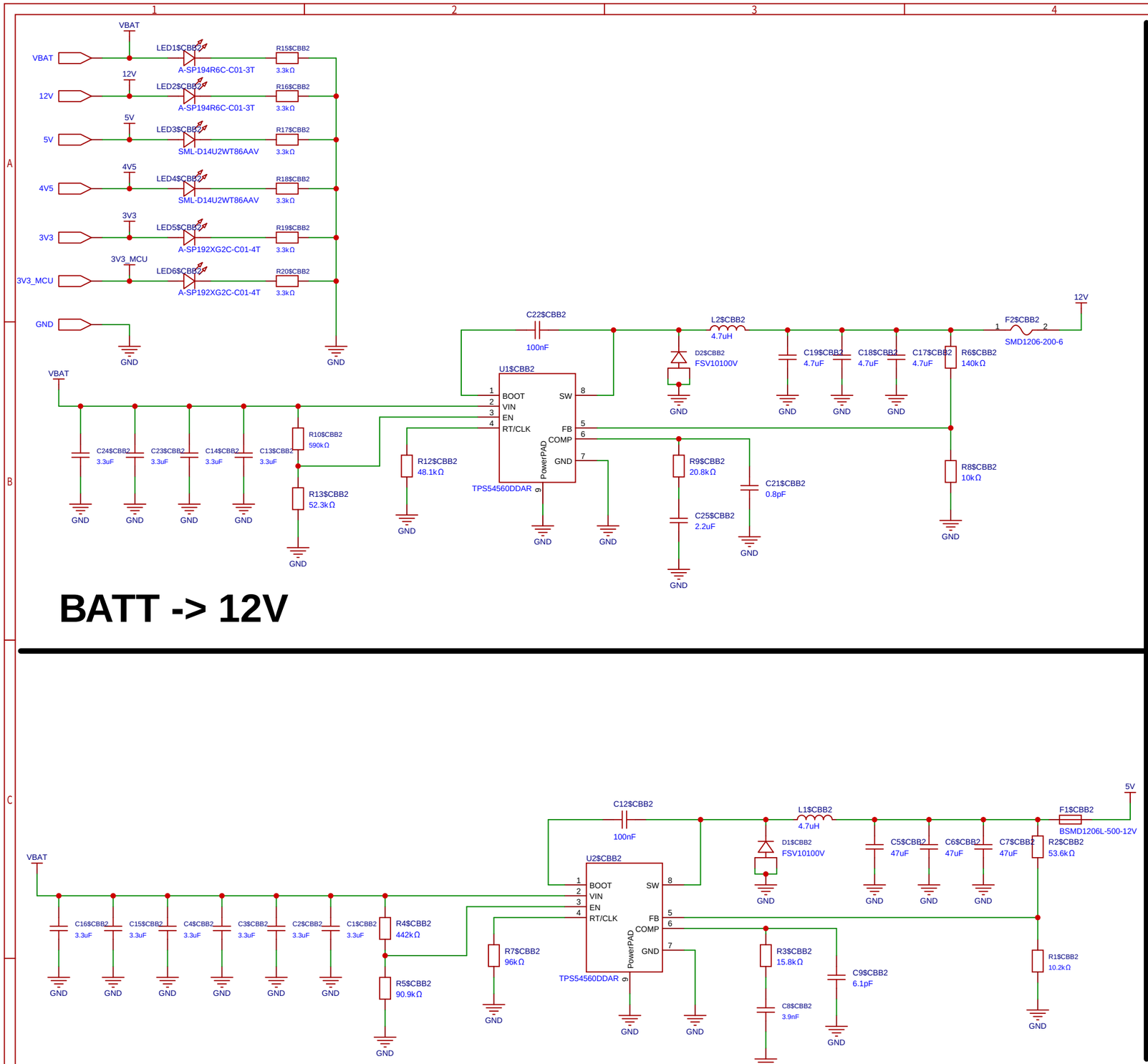

BATT -> 12V

BATT -> 5V

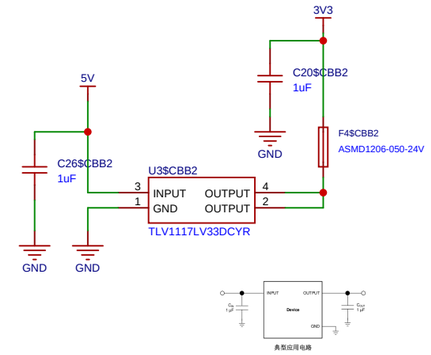

5 -> 3V3

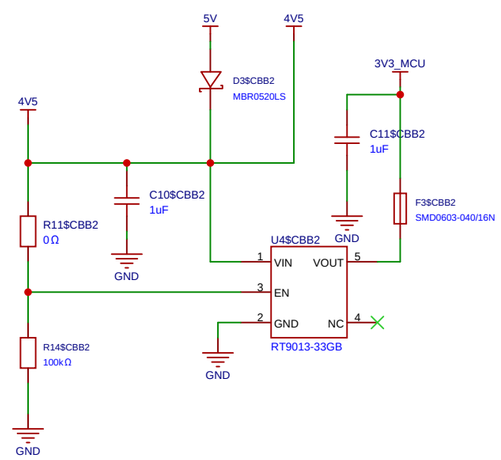

5/4V5 -> 3V3

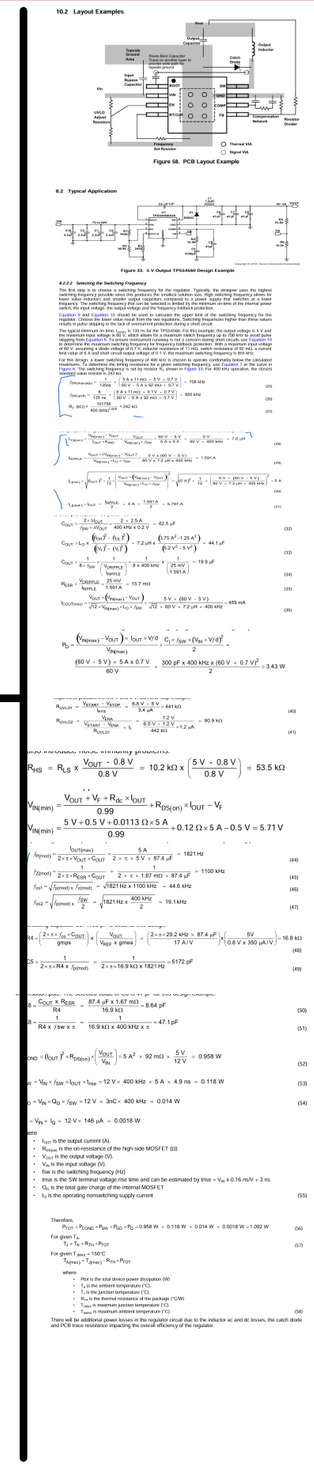

Schematic	Schematic2	Create at	2026-07-11
		Update at	2026-07-11
Board		Page	P1
Drawn	InternFC		
Reviewed			
		Version	Size	Page 1 Total 1
EasyEDA		V1.0	A4	EasyEDA.com

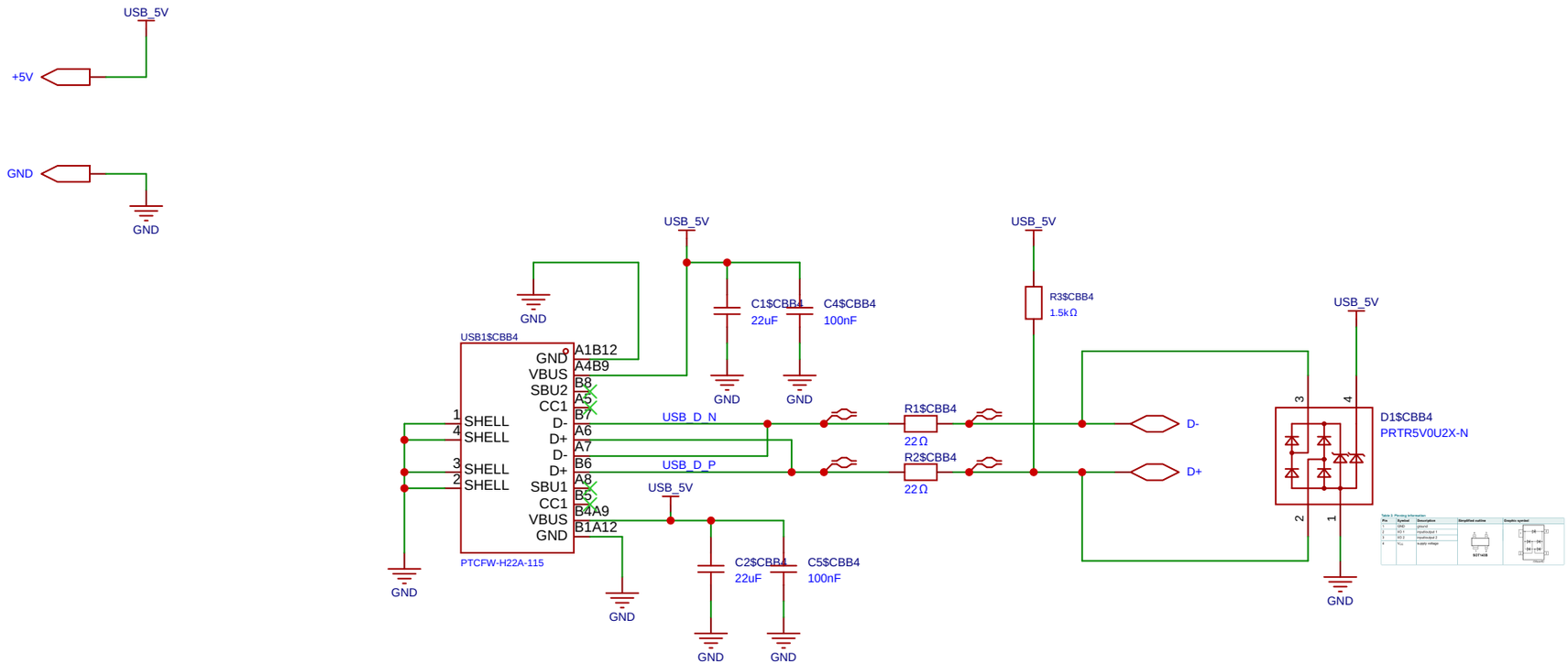

Schematic	Schematic2	Create at	2026-07-17
		Update at	2026-07-17
Board		Page	P1
Drawn	InternFC		
Reviewed			
		Version	Size	Page 1 Total 1
EasyEDA		V1.0	A4	EasyEDA.com

+5V USB_5V