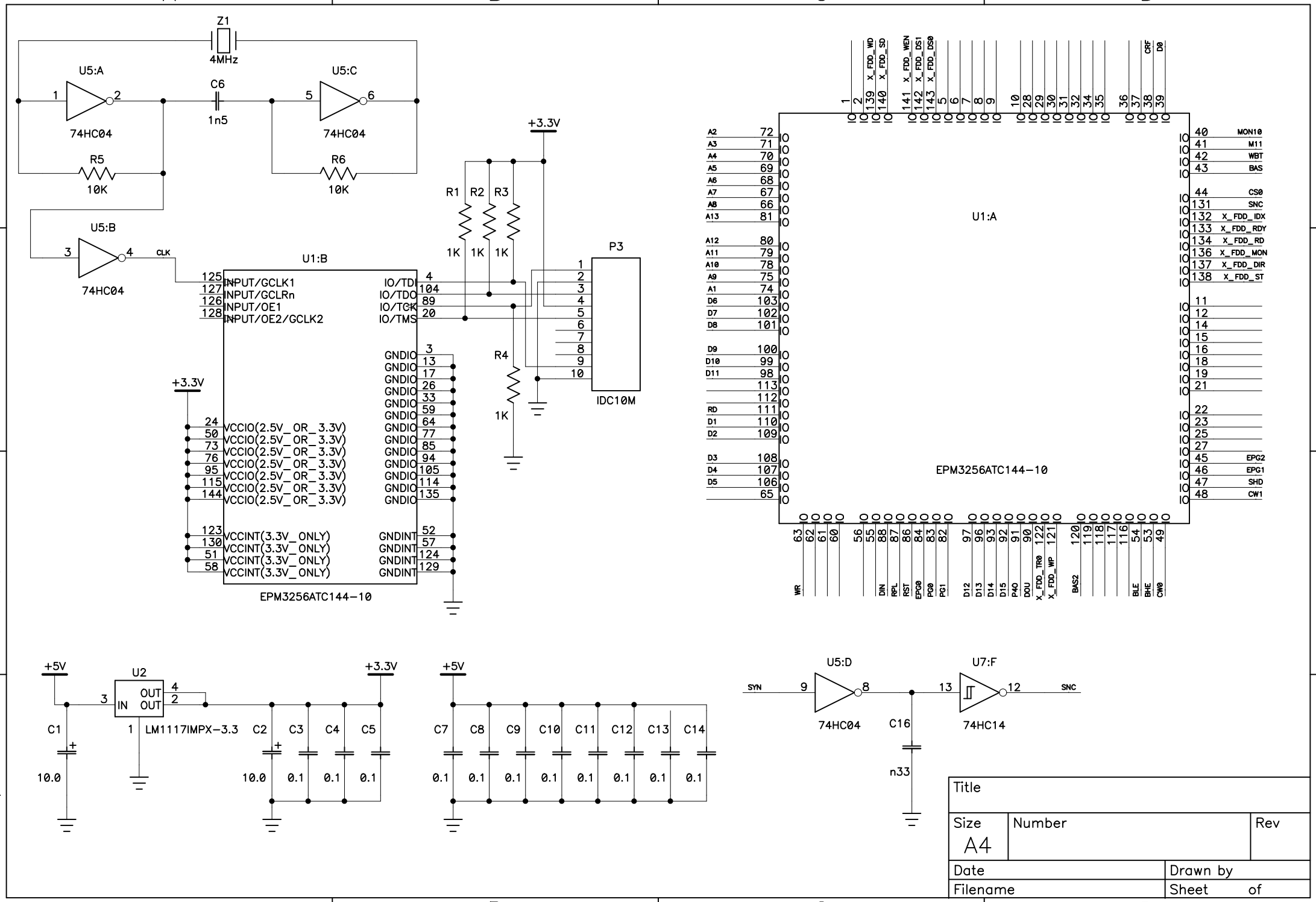
Z1
4MHz
U5:A
74HC04
C6
1n5
U5:C
74HC04
R5
10K
R6
10K
U5:B
74HC04
CLK
U1:B
INPUT/GCLK1
INPUT/GCLRn
INPUT/OE1
INPUT/OE2/GCLK2
IO/TDI
IO/TDO
IO/TCK
IO/TMS
GNDIO
GNDINT
VCCIO(2.5V_OR_3.3V)
VCCINT(3.3V_ONLY)
EPM3256ATC144-10
+3.3V
R1
R2
R3
1K
R4
P3
IDC10M
U1:A
EPM3256ATC144-10
MON10
M11
WBT
BAS
CS0
SNC
X_FDD_IDX
X_FDD_RDY
X_FDD_RD
X_FDD_MON
X_FDD_DIR
X_FDD_ST
EPG2
EPG1
SHD
CW1
WR
DIN
RPL
RST
EPG0
PG0
PG1
D12
D13
D14
D15
P40
DOU
X_FDD_TR0
X_FDD_WP
BAS2
BLE
BHE
CW0
+5V
U2
IN
OUT
LM1117IMPX-3.3
C1
10.0
C2
C3
C4
C5
0.1
C7
C8
C9
C10
C11
C12
C13
C14
SYN
U5:D
74HC04
C16
n33
U7:F
74HC14
SNC
Title
Size
A4
Number
Rev
Date
Drawn by
Filename
Sheet of

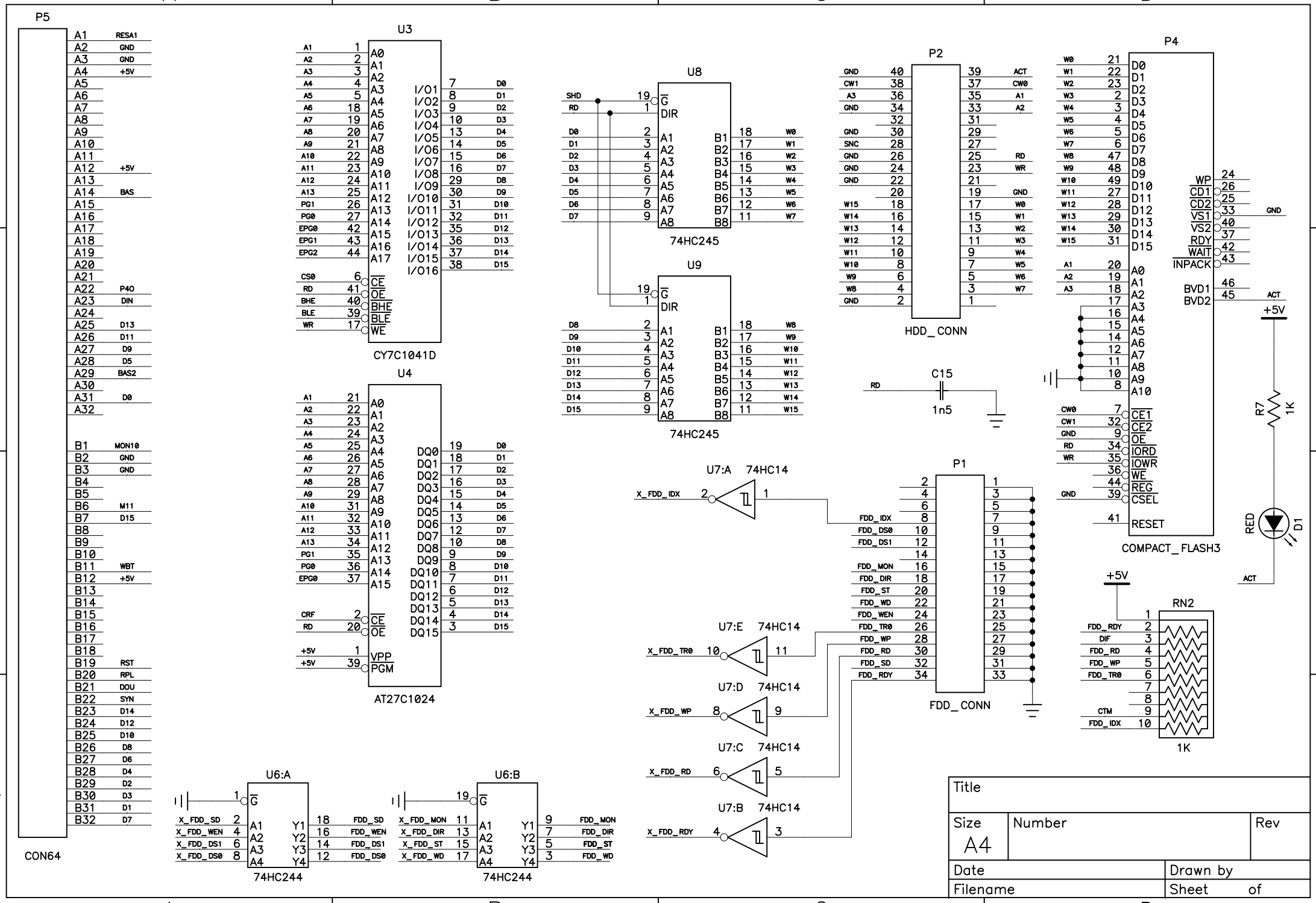
P5
CON64
U3
CY7C1041D
U4
AT27C1024
U8
74HC245
U9
74HC245
P2
HDD_CONN
P4
COMPACT_FLASH3
C15
1n5
U7:A 74HC14
U7:E 74HC14
U7:D 74HC14
U7:C 74HC14
U7:B 74HC14
P1
FDD_CONN
RN2
1K
R7
1K
RED
D1
U6:A
74HC244
U6:B
74HC244
Title
Size
A4
Number
Rev
Date
Drawn by
Filename
Sheet of