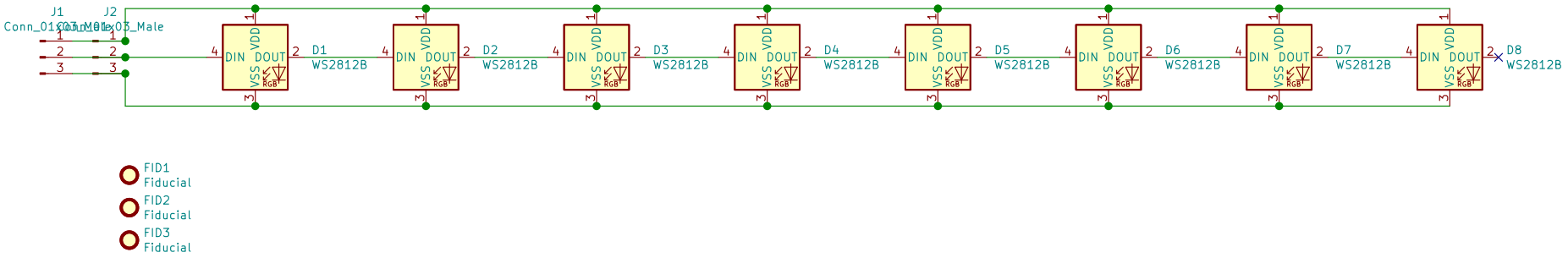

FID1
Fiducial

FID2
Fiducial

FID3
Fiducial

Sheet: /
File: ringLight.sch

Title:

Size: A4	Date:	**Rev:**
KiCad E.D.A. eeschema 5.1.9+dfsg1-1bpo10+1		Id: 1/1