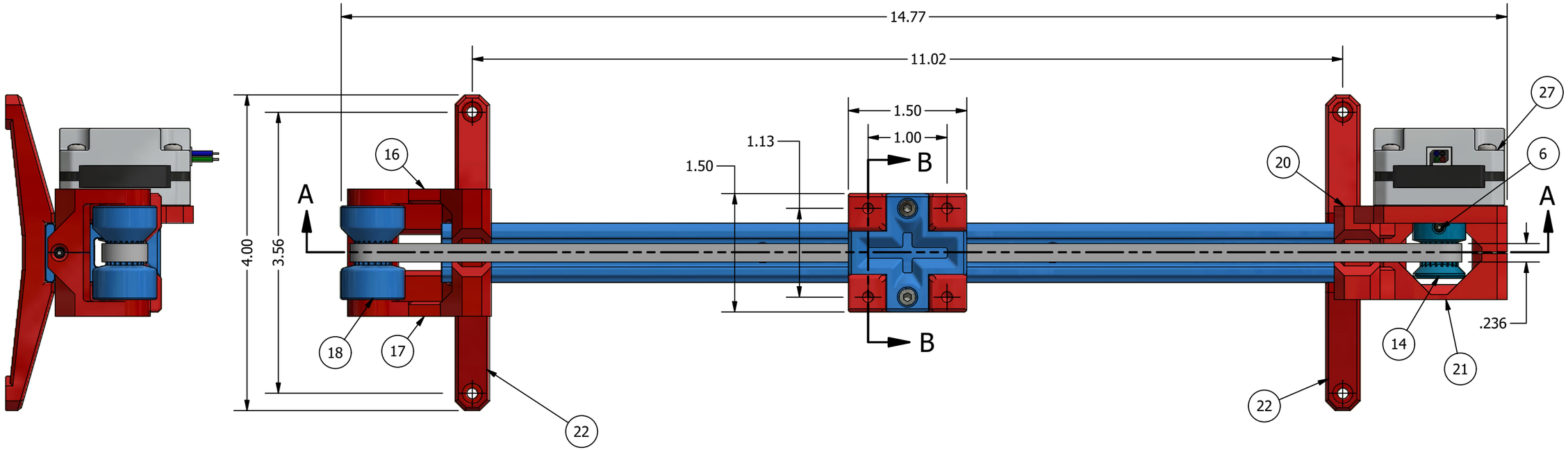

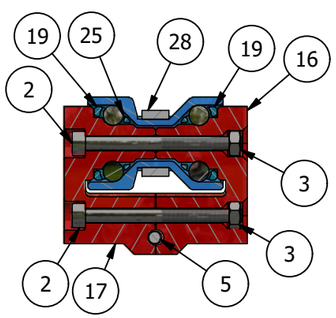

SECTION A-A

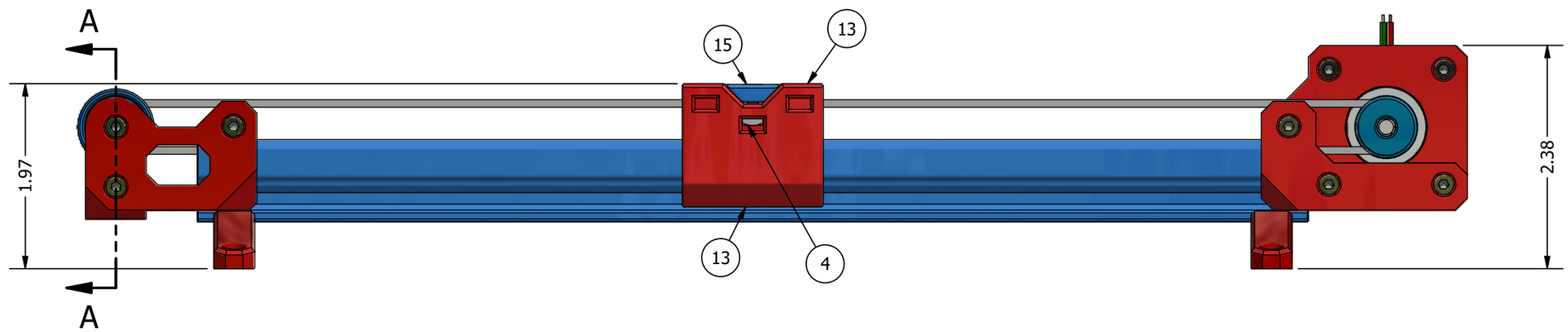

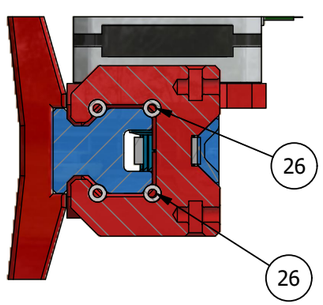

SECTION B-B

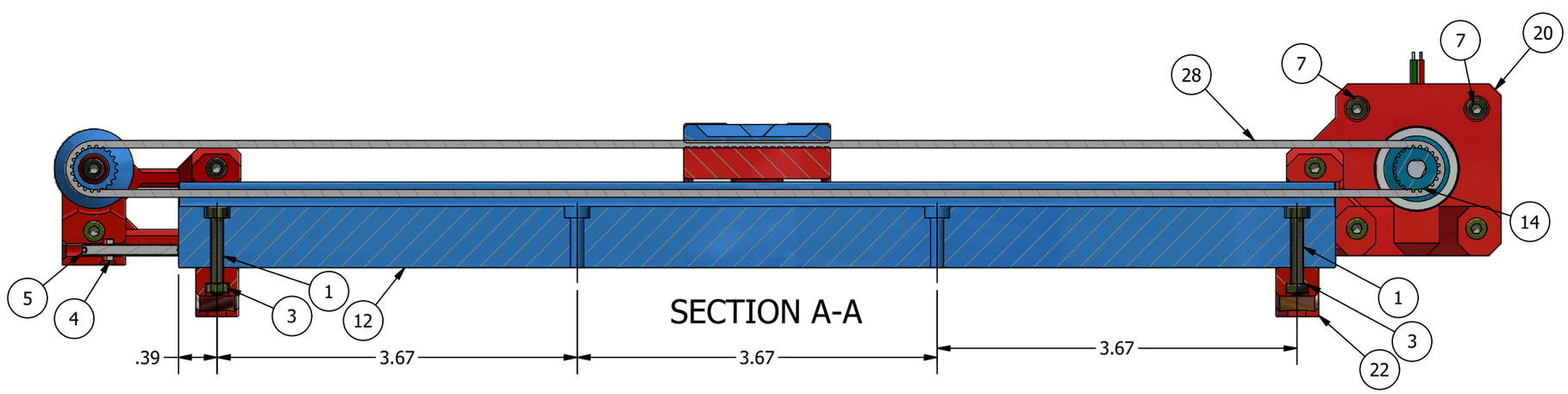

SECTION A-A

PROJECT SPONSERS:

CONTACT INFO:
EMAIL: mail@dddprintingworld.com
THINGIVERSE: 3dprintingworld
TWITTER: dddpworld
YOUTUBE: dddprintingworld

MOSTLY PRINTED LINEAR ACTUATOR

DL1

PART NO: LA-000

TITLE MAIN ASSEMBLY