ENGINEERING PORTFOLIO SAMPLE

DAREN SOMBILON

TABLE OF CONTENTS

Objective _____ 3

Software Expertise and Industries Served _____ 4

Inventor Work Procedure _____ 5-10

Standard Used _____ 12

Modelling Technique _____ 12

OBJECTIVE

With over nine years of experience in engineering design, technical drafting, and project coordination, I am pursuing a role as a Engineering Draftsperson with a focus on technical drafting, and process documentation. I offer strong proficiency in CAD software such as AutoCAD, Inventor, Onshape and Solidworks, alongside hands-on experience in 3D modeling,sheet metal design and technical production drawing. My goal is to contribute to the development of accurate, efficient process designs and support seamless project execution, cross functional coordination, and overall operational efficiency.

SOFTWARE EXPERTISE
INDUSTRIES SERVED

AUTOCAD

From aluminum and glass fabrication to cement construction, maintenance, and site development planning. I collaborate with the team to bring innovative solutions by creating precise 2D and 3D designs tailored to development needs

INVENTOR

My experience in creating 2D drawings and enhancing 3D automation processes for designing spools, handrails, CNC files, and cement plant structures has had a significant impact on standardization.

SOLIDWORKS

Skilled in sheet metal design for industries such as mining and electrical engineering, with expertise in wiring enclosures, ergonomic brackets, and automated weldments for structural and residential applications.

INVENTOR WORK PROCEDURE

METHODS FOR DRAWING

DRAWING SET SEQUENCE AND LAYOUT

1. Drawing Sheet Setup

2. Index Sheet and Notes Sheet for large project is commonly required

3. General Arrangement Drawing

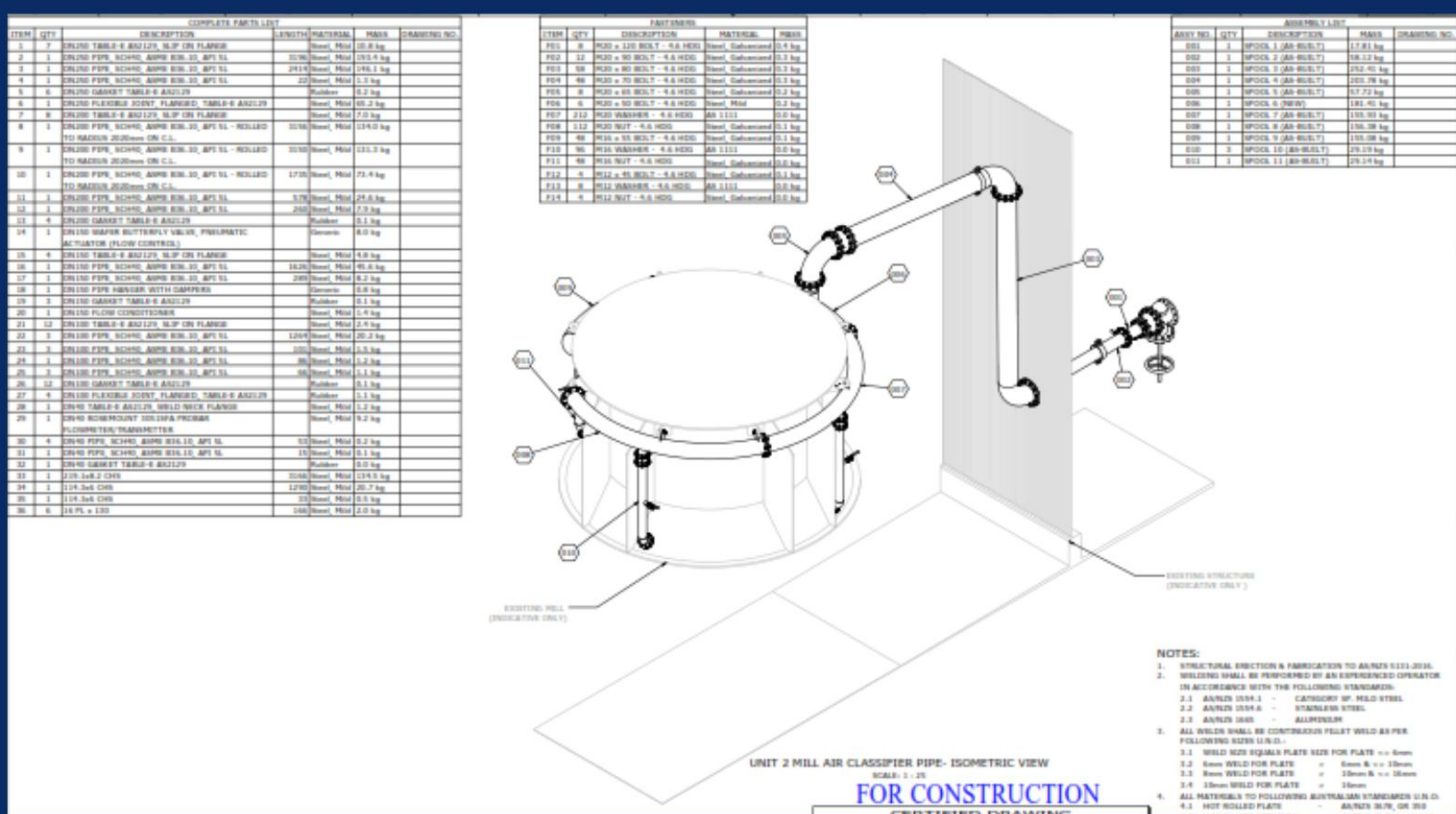

INVENTOR WORK PROCEDURE

METHODS FOR DRAWING

DRAWING SET SEQUENCE AND LAYOUT

4. Set-out Drawing -Site

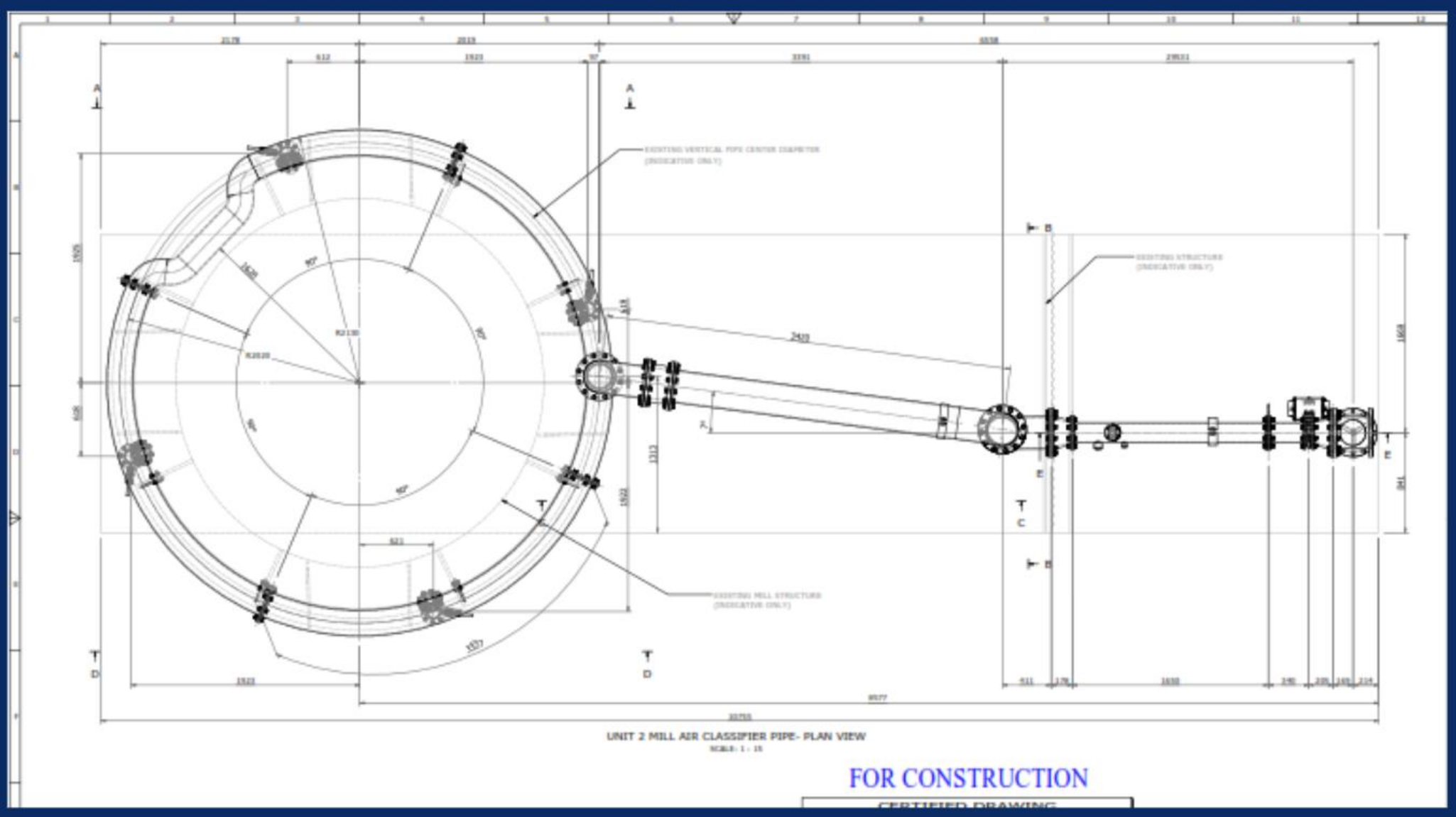

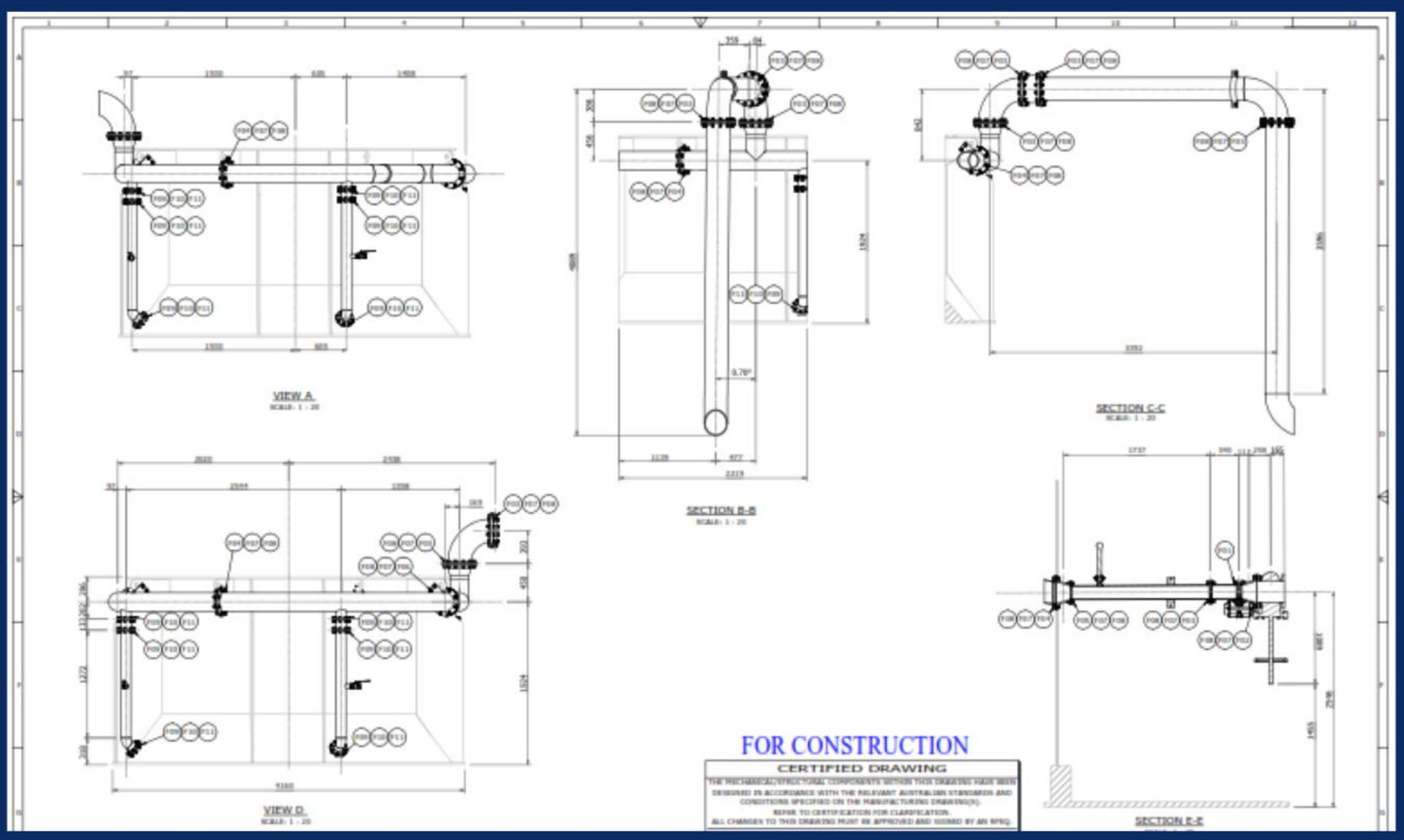

INVENTOR WORK PROCEDURE

METHODS FOR DRAWING

DRAWING SET SEQUENCE AND LAYOUT

5. Assembly Detail Drawings & Part Drawings

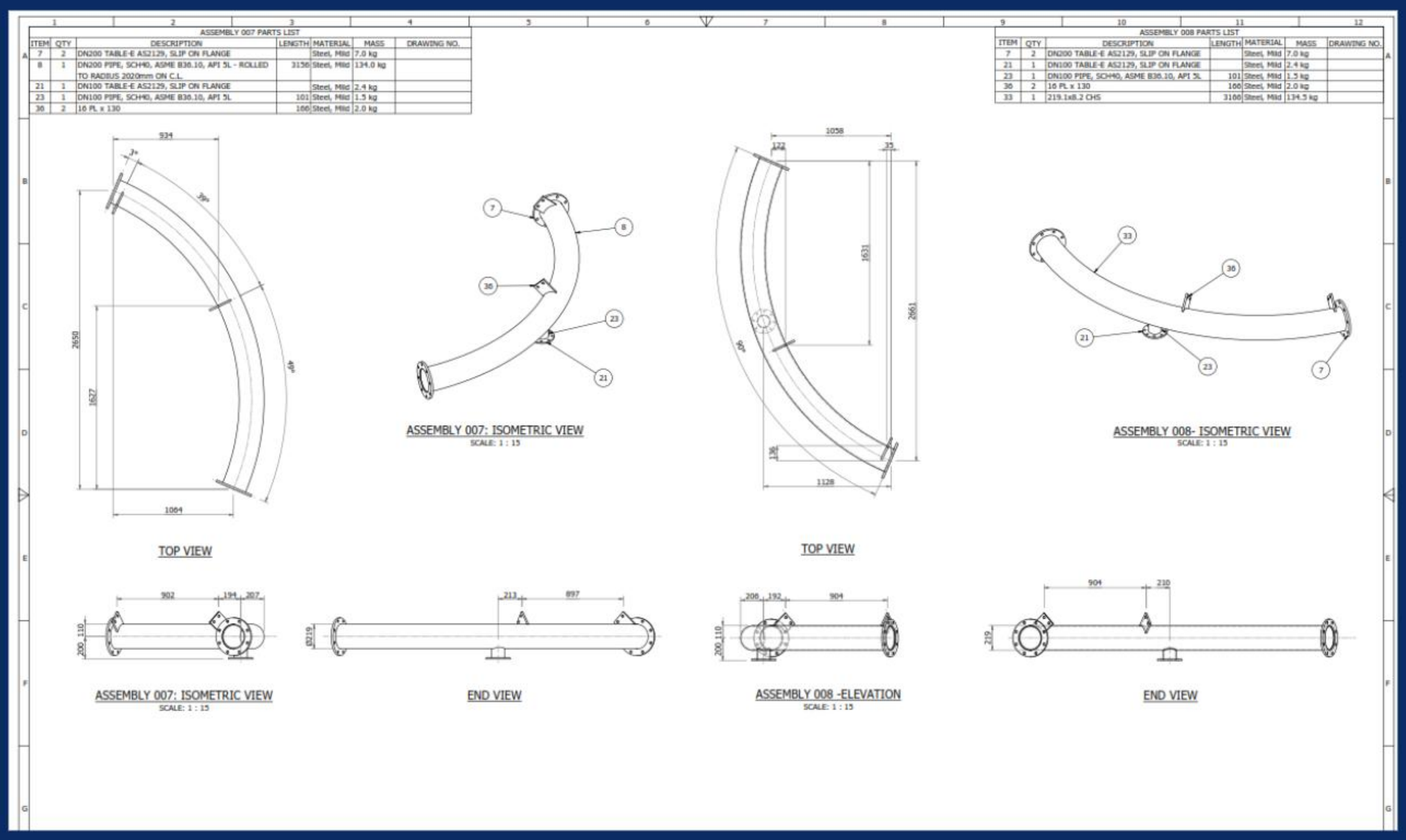

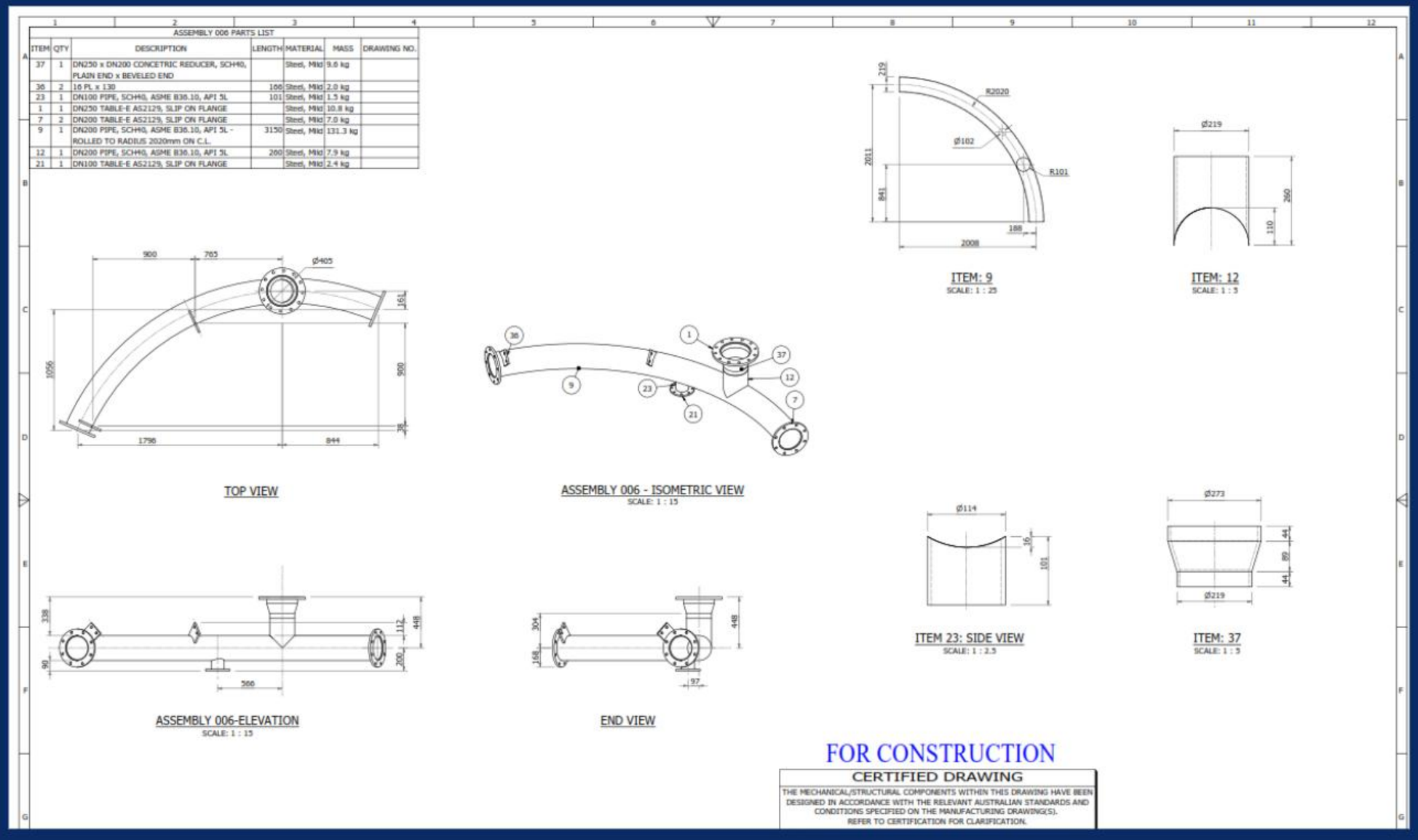

INVENTOR WORK PROCEDURE

METHODS FOR DRAWING

DRAWING SET SEQUENCE AND LAYOUT

5. Assembly Detail Drawings

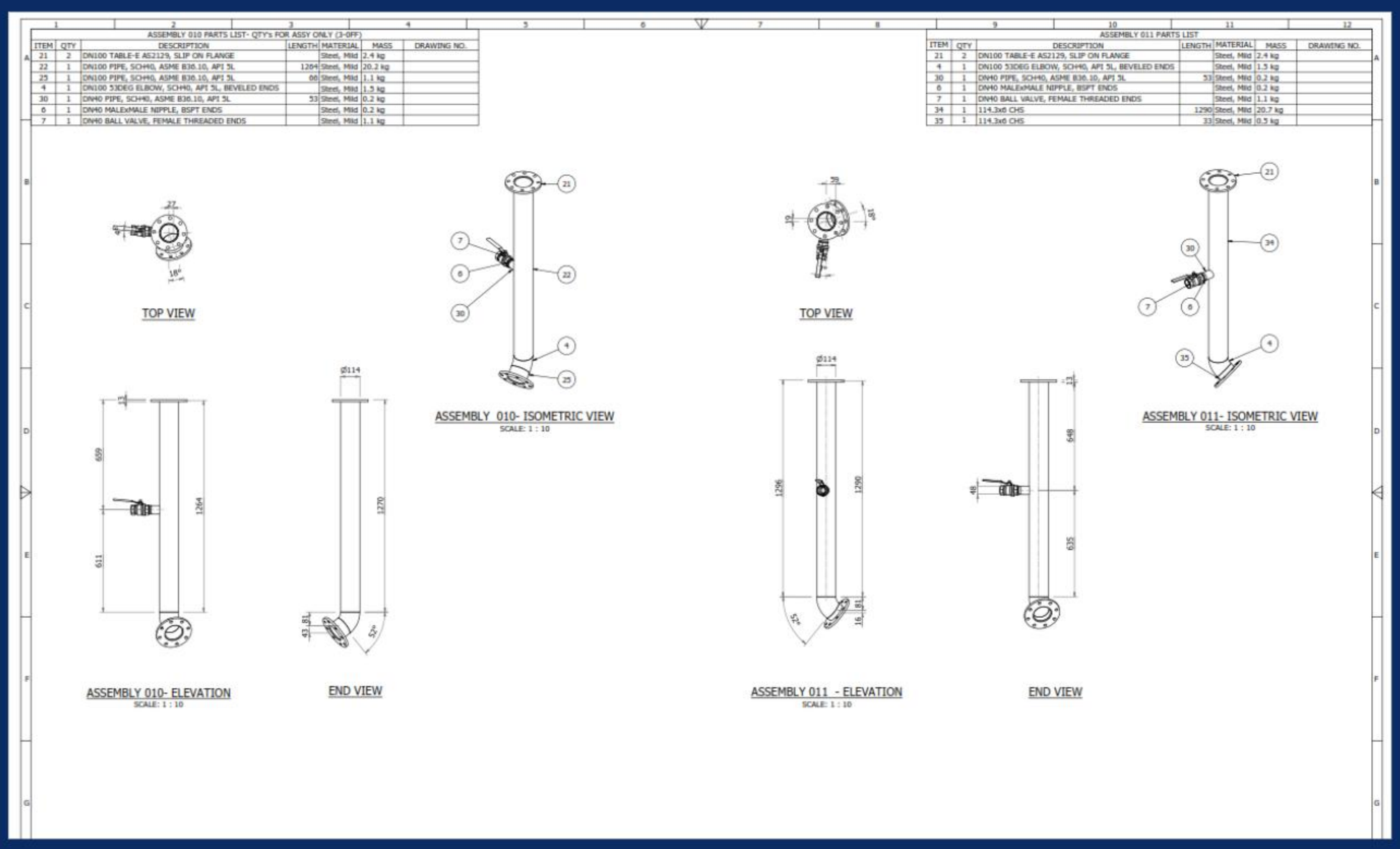

ASSEMBLY 010 PARTS LIST- QTY's FOR ASSY ONLY (3-OFF)

ITEM	QTY	DESCRIPTION	LENGTH	MATERIAL	MASS	DRAWING NO.
21	2	DN100 TABLE-E AS2129, SLIP ON FLANGE		Steel, Mild	2.4 kg	
22	1	DN100 PIPE, SCH40, ASME B36.10, API 5L	1264	Steel, Mild	20.2 kg	
25	1	DN100 PIPE, SCH40, ASME B36.10, API 5L	66	Steel, Mild	1.1 kg	
4	1	DN100 53DEG ELBOW, SCH40, API 5L, BEVELED ENDS		Steel, Mild	1.5 kg	
30	1	DN40 PIPE, SCH40, ASME B36.10, API 5L	53	Steel, Mild	0.2 kg	
6	1	DN40 MALExMALE NIPPLE, BSPT ENDS		Steel, Mild	0.2 kg	
7	1	DN40 BALL VALVE, FEMALE THREADED ENDS		Steel, Mild	1.1 kg	

ASSEMBLY 011 PARTS LIST

ITEM	QTY	DESCRIPTION	LENGTH	MATERIAL	MASS	DRAWING NO.
21	2	DN100 TABLE-E AS2129, SLIP ON FLANGE		Steel, Mild	2.4 kg	
4	1	DN100 53DEG ELBOW, SCH40, API 5L, BEVELED ENDS		Steel, Mild	1.5 kg	
30	1	DN40 PIPE, SCH40, ASME B36.10, API 5L	53	Steel, Mild	0.2 kg	
6	1	DN40 MALExMALE NIPPLE, BSPT ENDS		Steel, Mild	0.2 kg	
7	1	DN40 BALL VALVE, FEMALE THREADED ENDS		Steel, Mild	1.1 kg	
34	1	114.3x6 CHS	1290	Steel, Mild	20.7 kg	
35	1	114.3x6 CHS	33	Steel, Mild	0.5 kg	

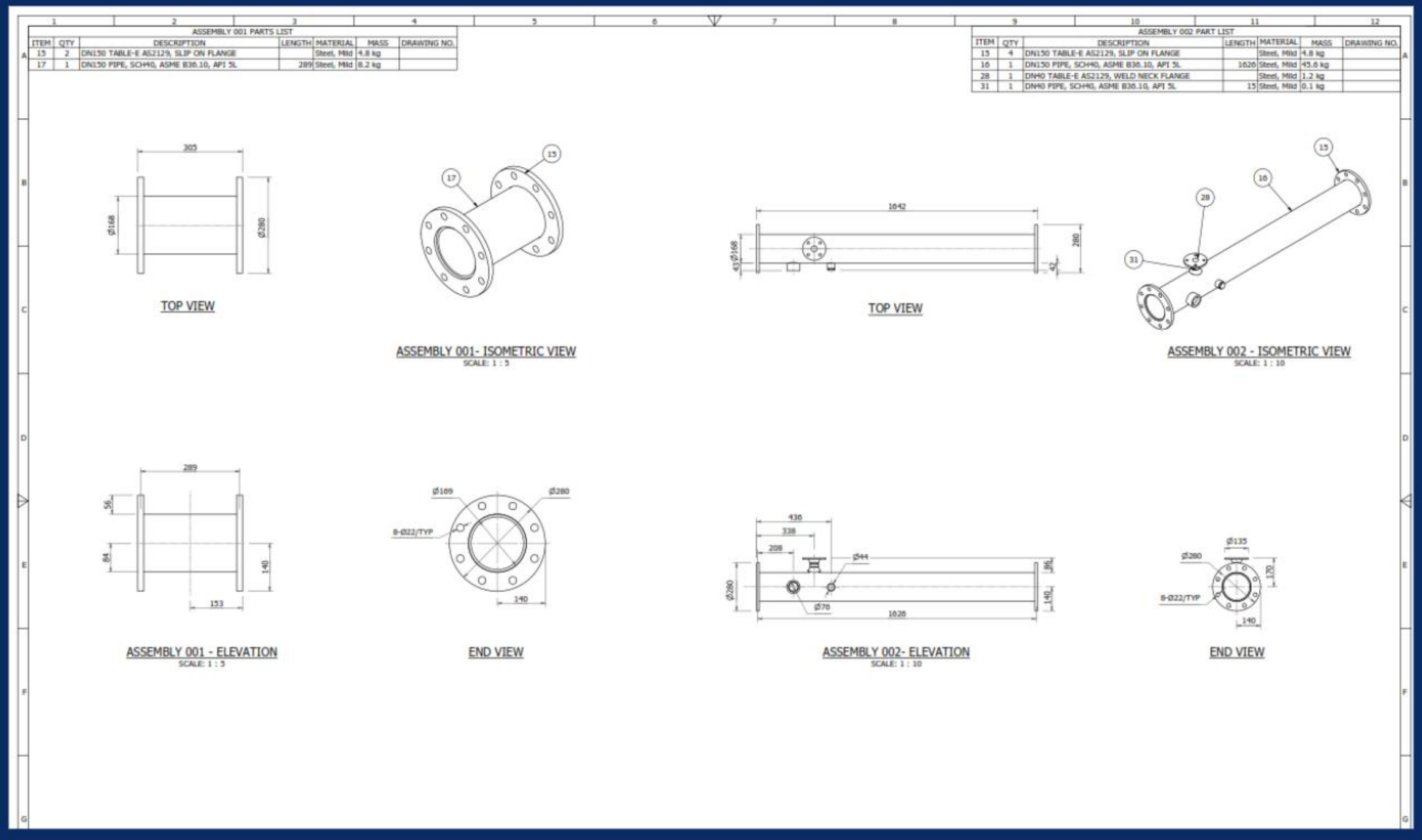

ASSEMBLY 001 PARTS LIST

ITEM	QTY	DESCRIPTION	LENGTH	MATERIAL	MASS	DRAWING NO.
15	2	DN150 TABLE-E AS2129, SLIP ON FLANGE		Steel, Mild	4.8 kg	
17	1	DN150 PIPE, SCH40, ASME B36.10, API 5L	289	Steel, Mild	8.2 kg	

ASSEMBLY 002 PART LIST

ITEM	QTY	DESCRIPTION	LENGTH	MATERIAL	MASS	DRAWING NO.
15	4	DN150 TABLE-E AS2129, SLIP ON FLANGE		Steel, Mild	4.8 kg	
16	1	DN150 PIPE, SCH40, ASME B36.10, API 5L	1026	Steel, Mild	45.6 kg	
28	1	DN40 TABLE-E AS2129, WELD NECK FLANGE		Steel, Mild	1.2 kg	
31	1	DN40 PIPE, SCH40, ASME B36.10, API 5L	15	Steel, Mild	0.1 kg	

INVENTOR WORK PROCEDURE

METHODS FOR DRAWING

DRAWING SET SEQUENCE AND LAYOUT

5. Assembly Detail Drawings

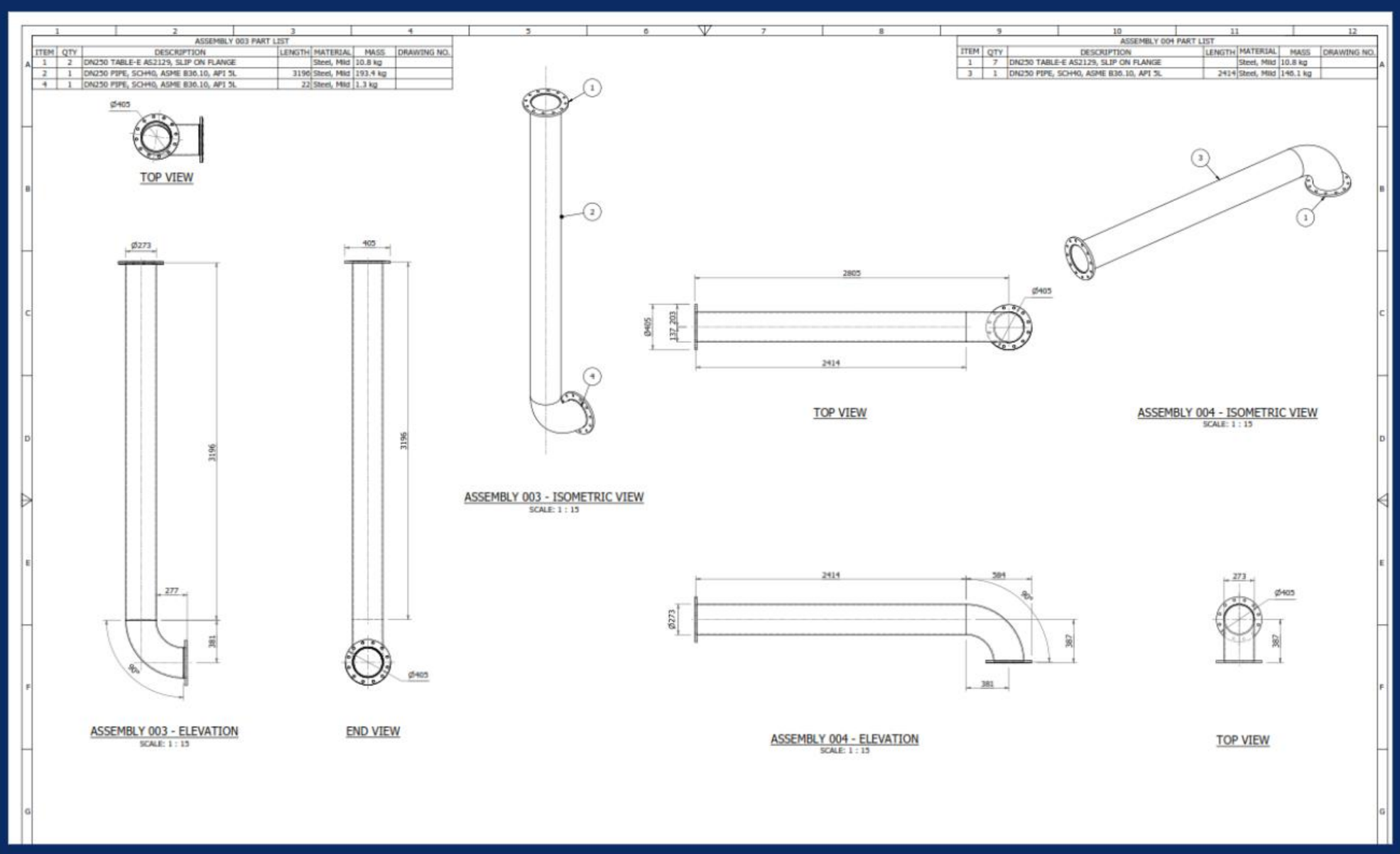

INVENTOR WORK PROCEDURE

METHODS FOR DRAWING

DRAWING SET SEQUENCE AND LAYOUT

6. Part Drawings

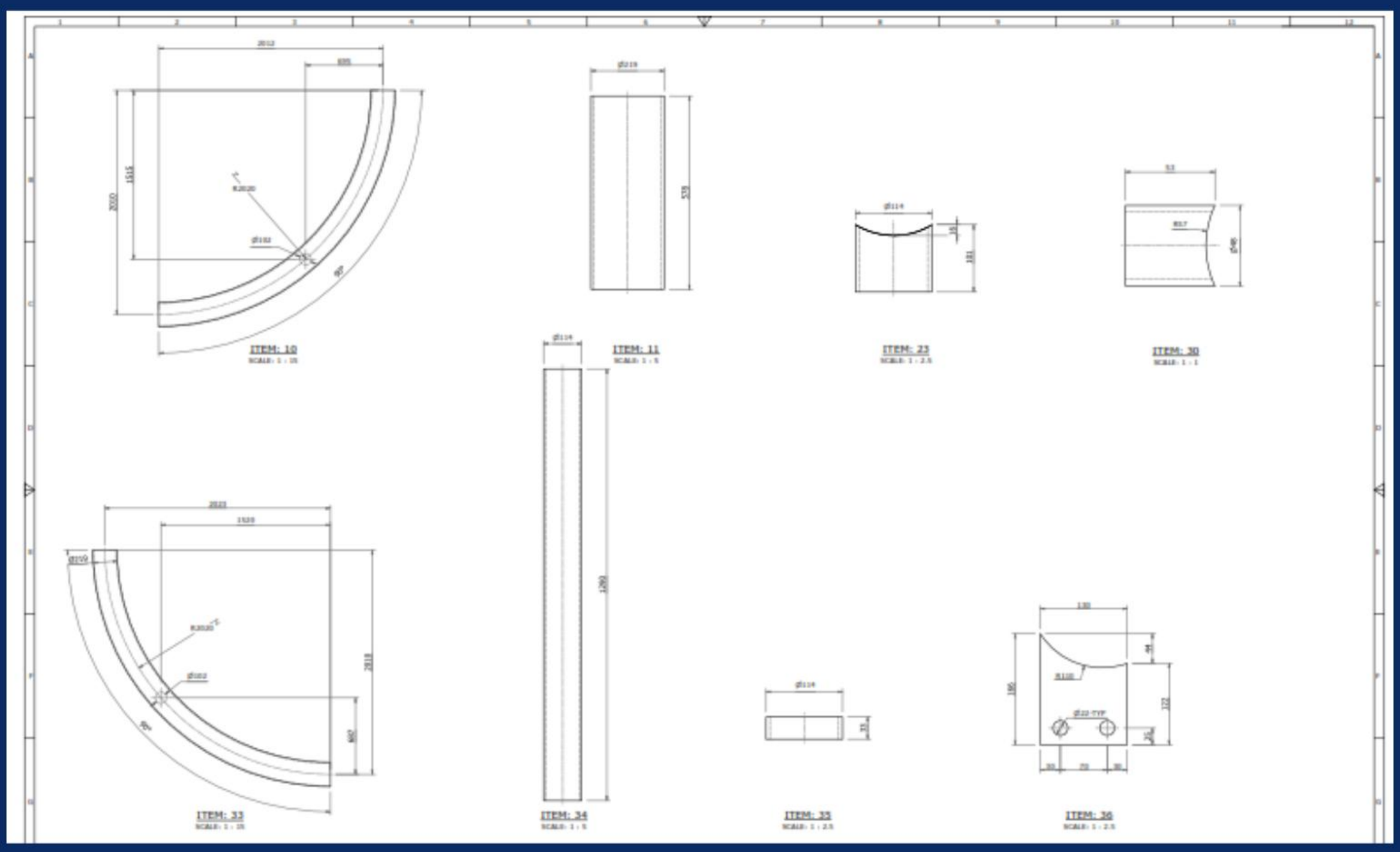

INVENTOR WORK PROCEDURE

METHODS FOR DRAWING

PRESENTATION OF ARRANGEMENT AND SETOUT DRAWINGS

This method enable to clarify or enhance the specific projection, arrangement view, list of tables needed, or even the color projection

1. Existing components and structure - colour
2. Assembly List - table
3. Parts List - table
4. Fasteners - table
5. Detailing of Sub Assemlbies and Parts - projection, arrangment view
6. Labelling of Parts - naming standard.

DRAWING CONTENT

1. View labels
2. Dimensioning
3. Sketch Symbols
4. Drawing Notes

DRAWING TITLE BLOCK TEMPLATES

1. Drawing Title Block Selection
2. Drawing Title Block Data Entry and Entry

CREATING DXF FILES

1. Standard Plates, Sheet Metal or Flat Bar
2. Pressed Plate

EXPORTING INVENTOR DRAWINGS TO DWG FORMAT

1. Export to DWG Format

ILOGIC

1. External Rules and Forms

STANDARD USED

AUSTRALIAN STANDARDS...

1. AS 1100 – Technical Drawing
2. AS 1100.101 – Technical Drawing – General Principles
3.) AS 1100.201 – Technical Drawing – Mechanical Drawing
4.) AS 1100.301 – Technical Drawing – Architectural Drawing
5.) AS 1100.401 – Technical Drawing – Engineering Survey and Engineering Survey Design Drawing
6.) AS 1100.501 – Technical Drawing – Structural Engineering Drawing

MODELING TECHNIQUE

MODELLING WITH THE MASTER PART METHODOLOGY

1. Using Top-Down design approach using Master Part Methodology.

SOLIDWORKS
SHEET METAL & WELDMENTS
PORTFOLIO SAMPLE

NOTES
1. TARE: 136KG
2. ALL STEELWORK TO BE IN ACCORDANCE WITH AS3678 AND AS3679 U.O.S.
3. PLATEWORK TO BE GRADE 250. CLOSED HOLLOW SECTIONS TO BE GRADE 350.
4. ALL STEELWORK AND PLATEWORK FABRICATION TO COMPLY WITH AS 4100-1998
5. ALL WELDING TO AS1554 - CATEGORY SP U.O.S.
6. ALL WELDS TO BE CONTINOUS FILLET WELDS U.O.S.
7. ALL WELDS TO BE EQUAL TO MINIMUM THICKNESS OF PLATE U.O.S.
8. ALL SHARP EDGES TO BE REMOVED.
9. FINISH: SEE BLUE SHEET.

ITEM	QTY	DESCRIPTION	MATERIAL	SOURCE	THK.
1	1	RH BENCH DOOR	AS NZS 3678 GR250	IN-HOUSE	1.6
2	1	LH BENCH DOOR	AS NZS 3678 GR250	IN-HOUSE	1.6
3	1	BENCH TOP	AS NZS 3678 GR250	IN-HOUSE	3
4	1	BENCH MID SHELF	AS NZS 3678 GR250	IN-HOUSE	1.6
5	1	MIRROR BENCH MID SHELF	AS NZS 3678 GR250	IN-HOUSE	1.6
6	1	CENTER POST	AS NZS 3678 GR250	IN-HOUSE	3
7	2	DRAW RUNNER 1	AS NZS 3678 GR250	IN-HOUSE	3
8	2	DRAW RUNNER 2	AS NZS 3678 GR250	IN-HOUSE	3
9	1	LH BENCH SIDE	AS NZS 3678 GR250	IN-HOUSE	3
10	1	RH BENCH SIDE	AS NZS 3678 GR250	IN-HOUSE	3
11	1	ENCLOSURE BACK PANEL	AS NZS 3678 GR250	IN-HOUSE	1.6
12	1	ENCLOSURE LUG	AS NZS 3678 GR250	IN-HOUSE	5
13	1	ENCLOSURE DIVIDER	AS NZS 3678 GR250	IN-HOUSE	1.6
14	4	UNIVERSAL CASTOR MOUNT PLATE 5mm	250GR MILD STEEL	IN-HOUSE	5
15	1	ENCLOSURE BOTTOM SHELF	AS NZS 3678 GR250	IN-HOUSE	1.6
16	2	HDW - PADBOLT-160MM	AS NZS 3678 GR250	PURCHASED	
17	4	BULLET HINGE 80mm FEMALE		PURCHASED	
18	4	BULLET HINGE 80mm MALE		PURCHASED	

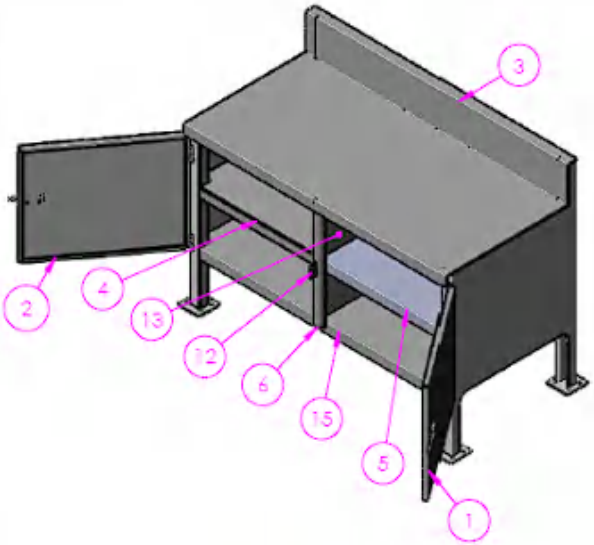

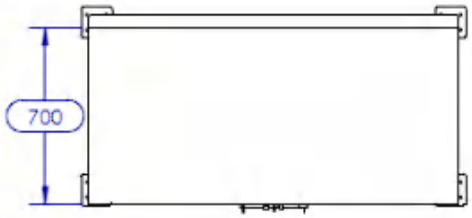

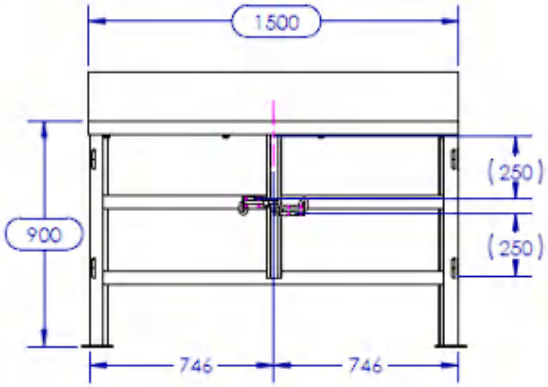

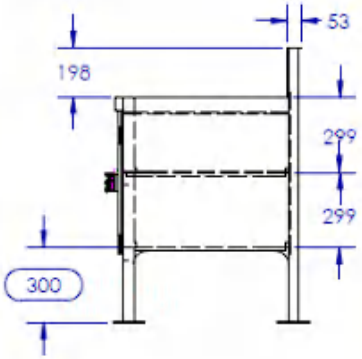

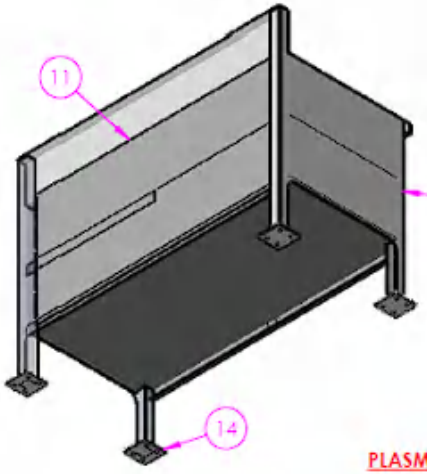

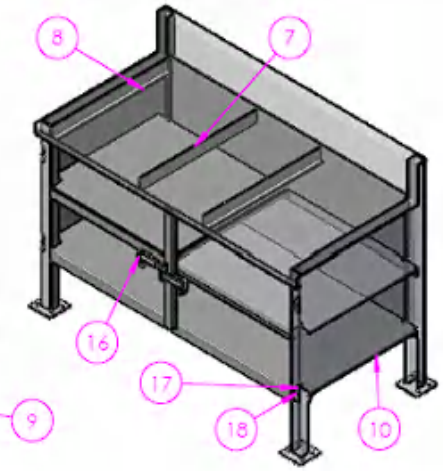

PLASMA PROGRAMS:

BENCH ENCLOSURE 1500 C/W DIVIDER-1.6mm
BENCH ENCLOSURE 1500 C/W DIVIDER-3mm
BENCH ENCLOSURE 1500 C/W DIVIDER-5mm

	NAME	DATE
DRAWN	DS	28/07/2026
CHK'D		
APPV'D		

DEBURR AND BREAK SHARP EDGES
DRAFTING STANDARD AS1100
UNLESS OTHERWISE SPECIFIED DIMENSIONS ARE IN MILLIMETRES. TOLERANCES: LINEAR: 0.5mm ANGULAR: 0.5°

MASS: 135.6 kg

TITLE: BENCH ENCLOSED, 1500mm L, CW 300mm GROUND CLEARANCE, SHELF, DIVIDER & DOORS

3RD ANGLE PROJECTION

SCALE: 1:20

DO NOT SCALE DRAWING

A3

SHEET 1 OF 7

REVISION A

NOTES

1. TARE: 118.9 KG
2. ALL STEELWORK TO BE IN ACCORDANCE WITH AS3678 AND AS3679 U.N.O
3. PLATEWORK TO BE GRADE 250. CLOSED HOLLOW SECTIONS TO BE GRADE 350.
4. ALL STEELWORK AND PLATEWORK FABRICATION TO COMPLY WITH AS 3990 - 1993
5. ALL WELDING TO AS1554 - CATEGORY SP UNO
6. ALL WELDS TO BE 5mm CONTINOUS FILLET WELDS U.N.O
7. FINISH: SEE BLUE SHEET

ITEM	QTY	PART NAME	MATERIAL	THK	NOTES
1	2	ENCLOSED BENCH SHELF	AS NZS 3678 GR250	1.6	
2	1	BACK PANEL	AS NZS 3678 GR250	1.6	
3	2	BACKBOARD U-PRESS	AS NZS 3678 GR250	2.5	
4	4	DRAWER RUNNER	AS NZS 3678 GR250	2.5	
5	1	BENCH SIDE RH	AS NZS 3678 GR250	2.5	
6	1	MIRRORBENCH SIDE RH	AS NZS 3678 GR250	2.5	
7	1	BACKSPLASH PANEL	AS NZS 3678 GR250	2.5	
8	1	BENCHTOP	AS NZS 3678 GR250	2.5	
9	4	STD CASTOR PLATE	AS NZS 3678 GR250	5	
10	2	125mm SWIVEL AND BRAKE CASTOR I62T15R125	RUBBER		PURCHASED
11	2	125mm FIXED CASTOR	AS NZS 3678 GR 250		PURCHASED
12	16	BOLT, M8x25			
13	16	NUT, NYLOCNUT M8			
14	32	WASHER, M8			

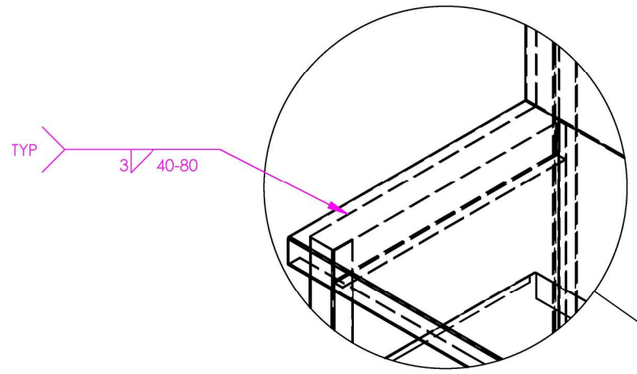

DETAIL A
SCALE 1 : 10

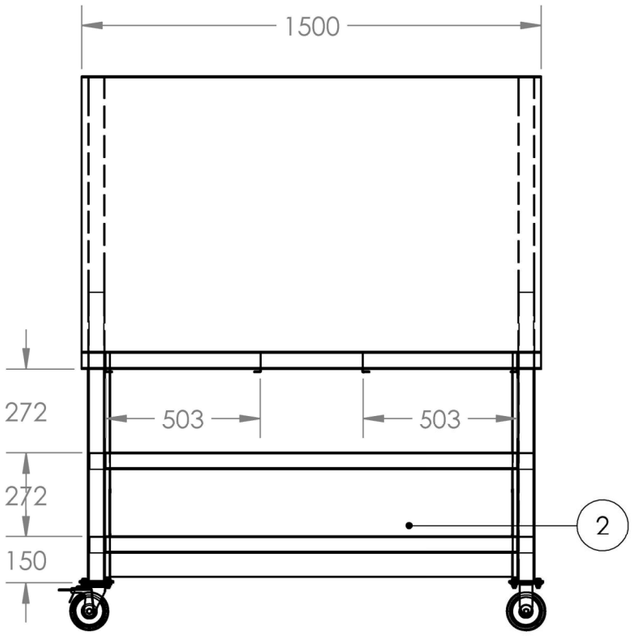

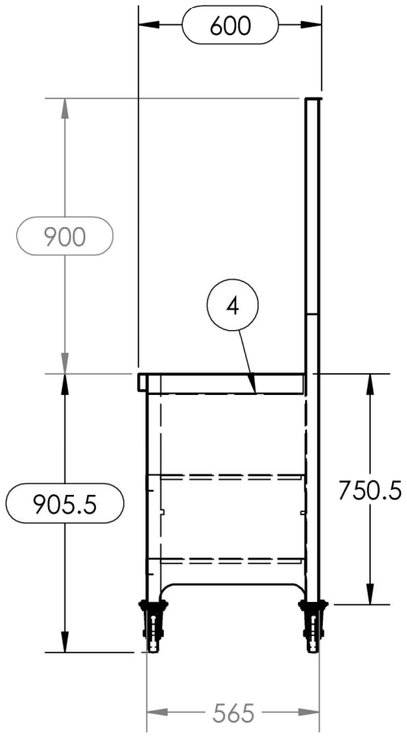

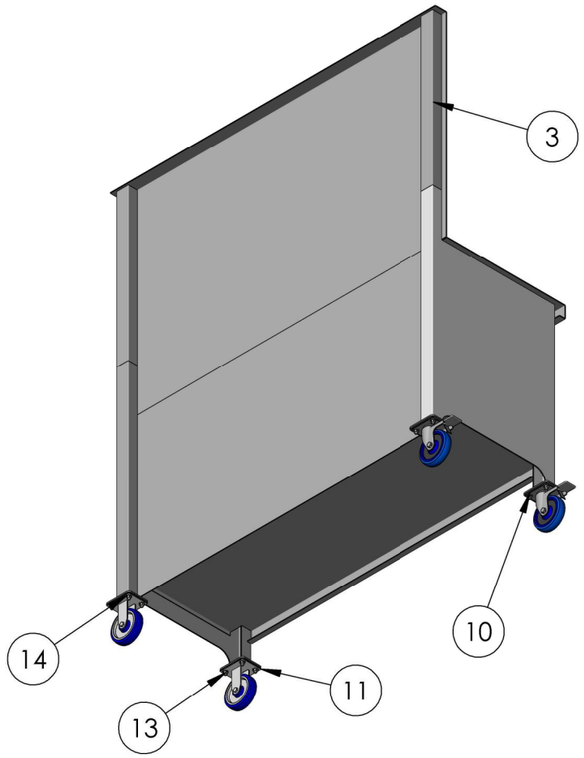

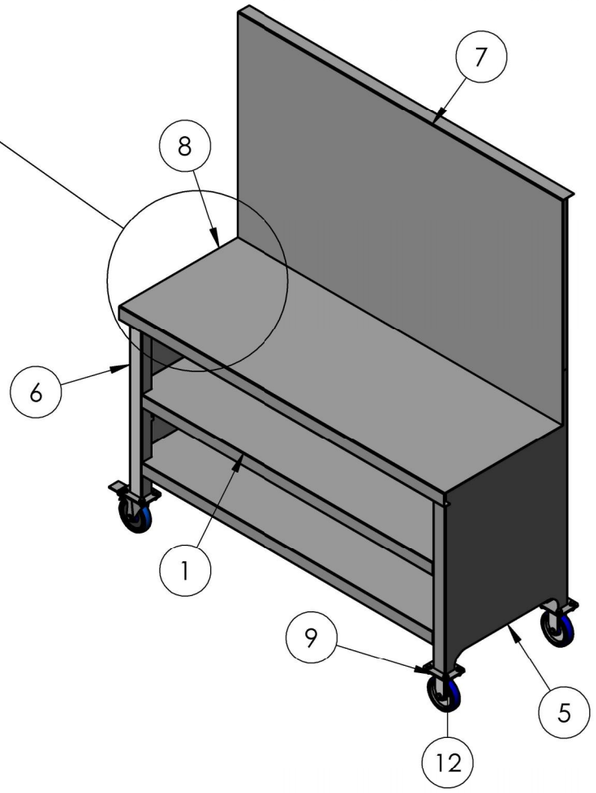

PLASMA PROGRAMS:
BS15-SB-600D- 1.6mm -
BS15-SB-600D- 2.5mm -
BS15-SB-600D- 5mm -

	NAME	DATE
DRAWN	DS	23/04/2026
CHK'D		
APPV'D		

DEBURR AND BREAK SHARP EDGES
DRAFTING STANDARD AS1100
UNLESS OTHERWISE SPECIFIED DIMENSIONS ARE IN MILLIMETERS. TOLERANCES: LINEAR: 0.5mm, ANGULAR: 0.5°

MASS: 118.9 kg

TITLE: -600D-

3RD ANGLE PROJECTION:

SCALE:1:20

DO NOT SCALE DRAWING

A3

SHEET 1 OF 3

REVISION A

NOTES
1. TARE: 60KG
2. ALL STEELWORK TO BE IN ACCORDANCE WITH AS3678 AND AS3679 U.O.S.
3. PLATEWORK TO BE GRADE 250. CLOSED HOLLOW SECTIONS TO BE GRADE 350.
4. ALL STEELWORK AND PLATEWORK FABRICATION TO COMPLY WITH AS 4100-1998
5. ALL WELDING TO AS1554 - CATEGORY SP U.O.S.
6. ALL WELDS TO BE CONTINOUS FILLET WELDS U.O.S.
7. ALL WELDS TO BE EQUAL TO MINIMUM THICKNESS OF PLATE U.O.S.
8. ALL SHARP EDGES TO BE REMOVED.
9. FINISH: SEE BLUE SHEET.

ITEM	QTY	PART NAME	MATERIAL	THK.	NOTES
1	2	END PLATE	AS NZS 3678 GR250	3	
2	2	SIDE PLATE	AS NZS 3678 GR250	3	
3	1	FLOOR PLATE	CHECKER PLATE	5	
4	1	CAGE WELDMENT			SEE SEPERATE DRAWING
5	4	WELD-ON LIFTING POINT - VLBS-1.5T	AS NZS 3678 GR250	3	
6	1	130 X 70 CERT PLATE	304 STAINLESS STEEL	1.6	PURCHASED
7	4	WLL 500KG STICKER	-	1	PURCHASED

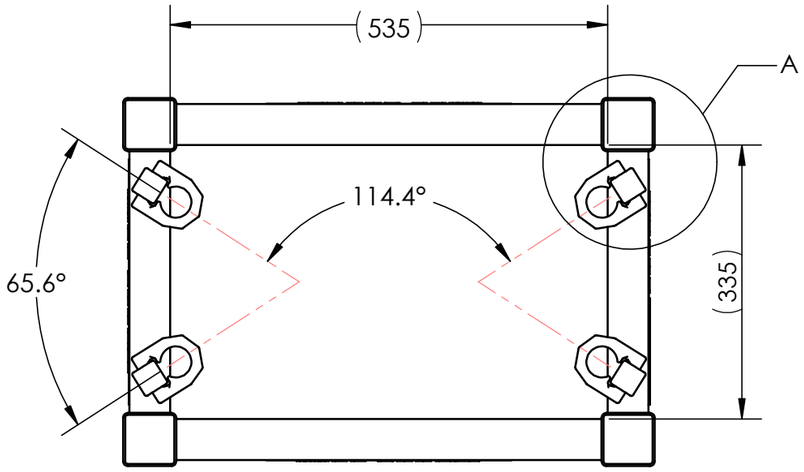

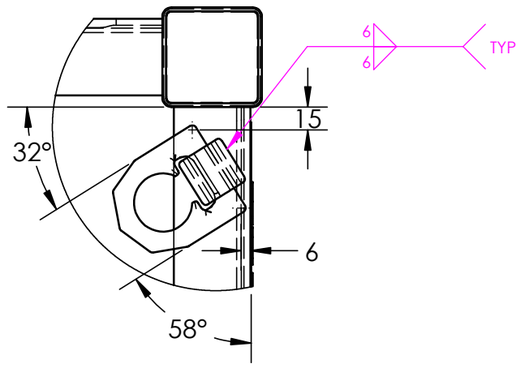

DETAIL A

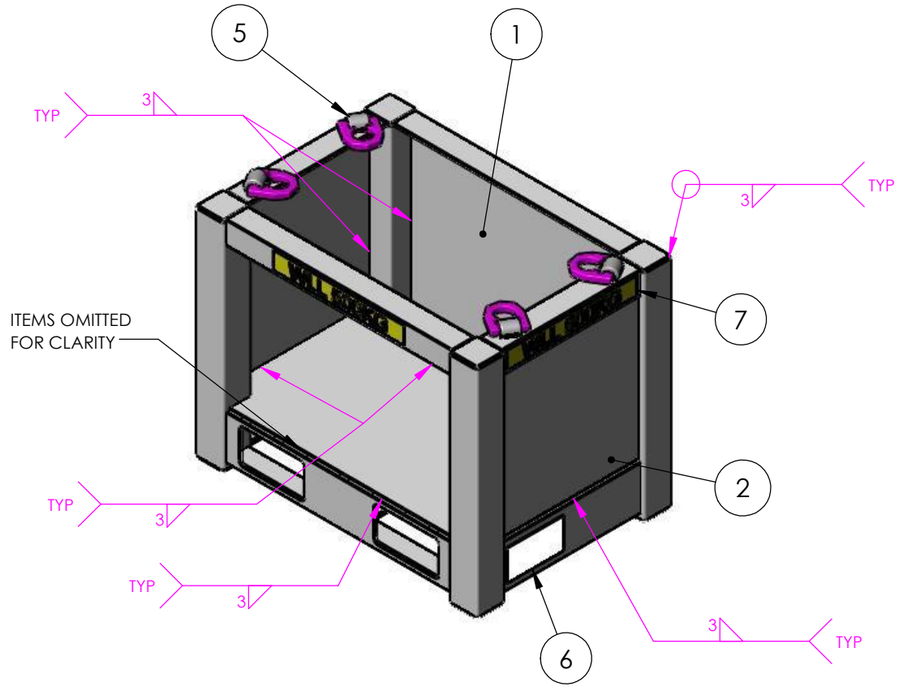

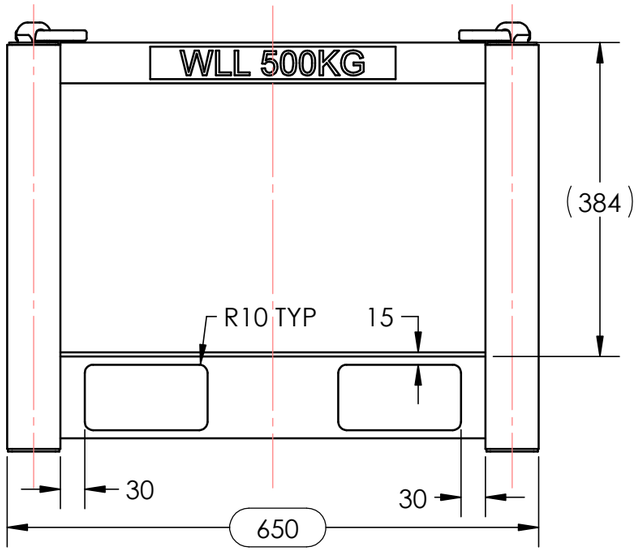

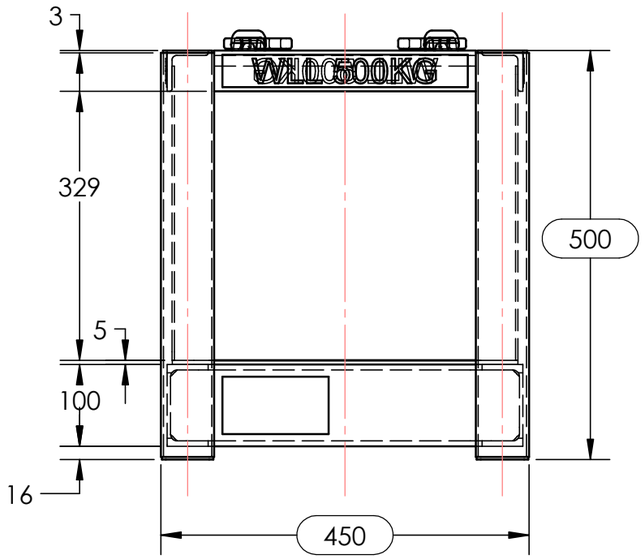

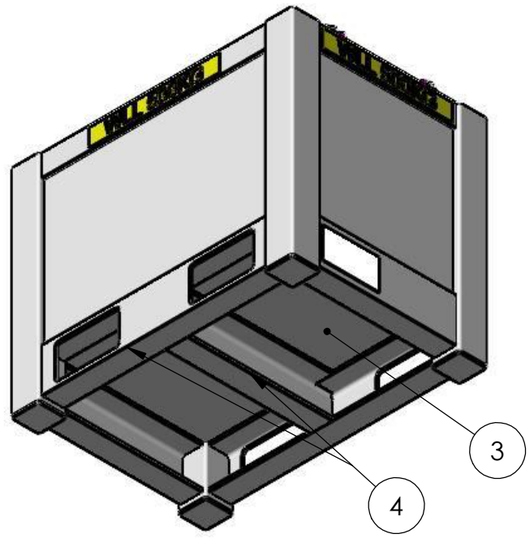

PLASMA PROGRAMS:
CERTIFIED CRANE GOODS CAGE CW LIFTING LUGS & FORK POCKETS 3mm -
CERTIFIED CRANE GOODS CAGE CW LIFTING LUGS & FORK POCKETS 5mm

	NAME	DATE
DRAWN	DS	10/04/2026
CHK'D		
APPV'D		

UNLESS OTHERWISE SPECIFIED DIMENSIONS ARE IN MILLIMETERS. TOLERANCES: LINEAR: 0.5mm, ANGULAR: 0.5°

DRAFTING STANDARD AS1100
DEBURR AND BREAK SHARP EDGES
MASS: 60kg

TITLE: CERITIFIED CRANE GOODS CAGE

3RD ANGLE PROJECTION:

SCALE:1:10
DO NOT SCALE DRAWING

A3

SHEET 1 OF 6

REVISION A

FILE LOCATION: W:\ CERTIFIED CRANE GOODS CAGE CW LIFTING LUGS & FORK POCKETS - 3\5. SW\CRANE GOODS CAGE WITH FORK POCKETS ADDED\

NOTES

1. TARE: 33kg
2. ALL STEELWORK TO BE IN ACCORDANCE WITH AS3678 AND AS3679 U.O.S.
3. PLATEWORK TO BE GRADE 250. CLOSED HOLLOW SECTIONS TO BE GRADE 350.
4. ALL STEELWORK AND PLATEWORK FABRICATION TO COMPLY WITH AS 4100-1998
5. ALL WELDING TO AS1554 - CATEGORY SP U.O.S.
6. ALL WELDS TO BE CONTINOUS FILLET WELDS U.O.S.
7. ALL WELDS TO BE EQUAL TO MINIMUM THICKNESS OF PLATE U.O.S.
8. ALL SHARP EDGES TO BE REMOVED.
9. FINISH: SEE BLUE SHEET.

ITEM NO.	QTY.	DESCRIPTION	MATERIAL	LENGTH	THK
1	3	BASE PLATE	AS NZS 3678 GR350	150	6
2	1	33.7x4.0 CHS	AS NZS 3678 GR350	3992	
3	1	33.7x4.0 CHS	AS NZS 3678 GR350	1061	
4	1	33.7x4.0 CHS	AS NZS 3678 GR350	850	
5	1	33.7x4.0 CHS	AS NZS 3678 GR350	1107	
6	1	TOE BOARD	AS NZS 3678 GR350	1992	6

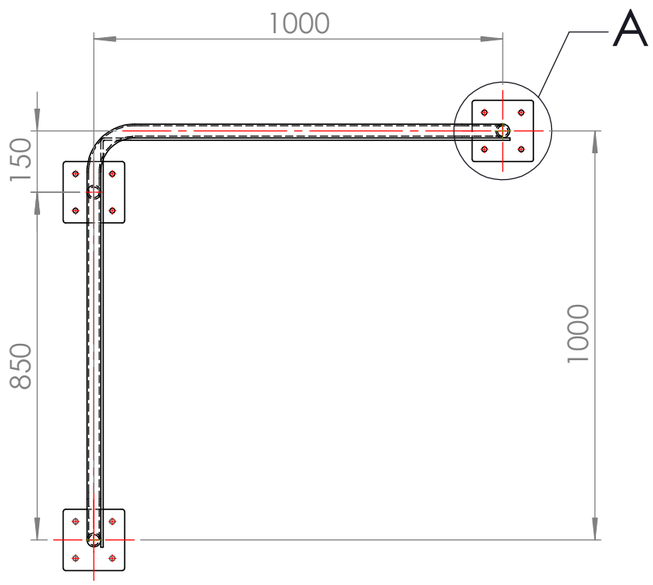

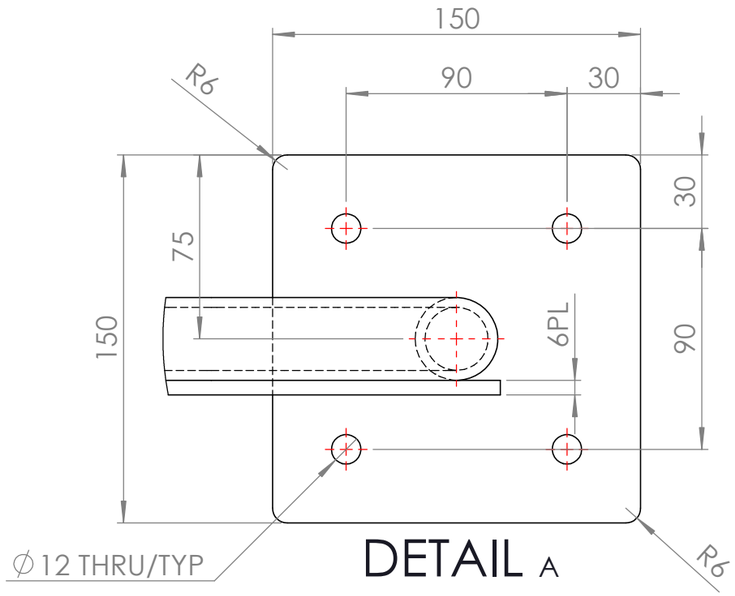

DETAIL A

SCALE 1 : 2.5

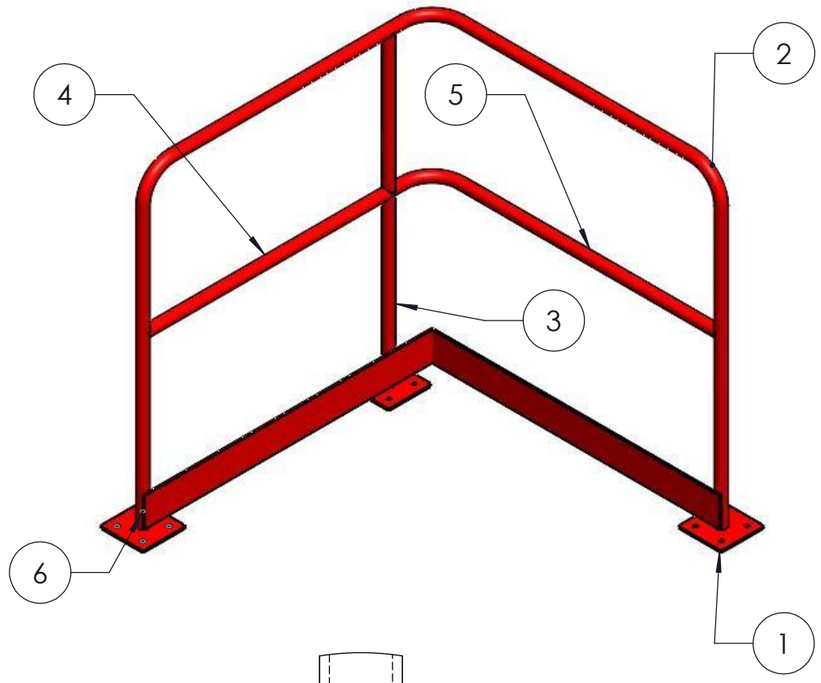

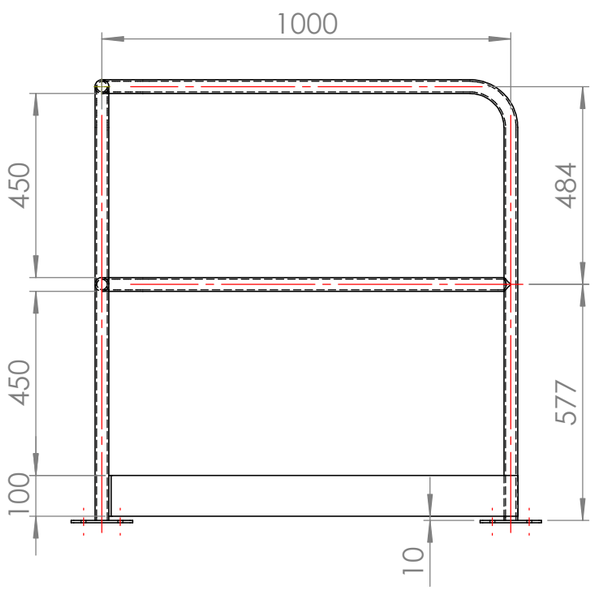

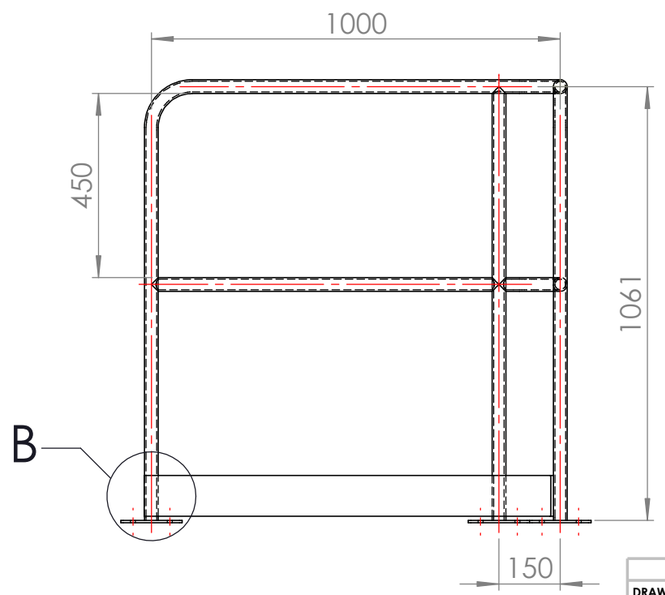

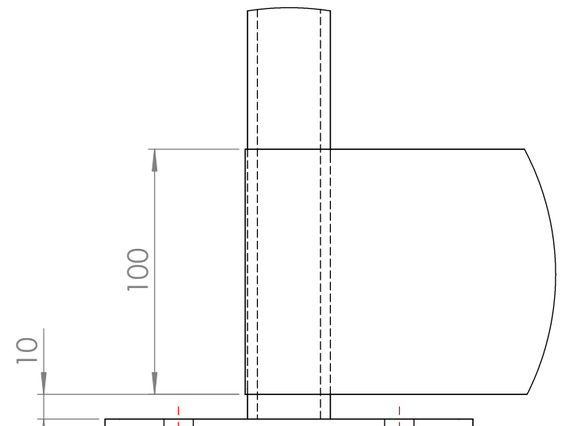

DETAIL B

SCALE 1 : 2.5

	NAME	DATE
DRAWN	DS	6/10/2025
CHK'D		
APPV'D		

UNLESS OTHERWISE SPECIFIED DIMENSIONS ARE IN MILLIMETERS. TOLERANCES: LINEAR: 0.5mm, ANGULAR: 0.5°

DRAFTING STANDARD AS1100

DEBURR AND BREAK SHARP EDGES

MASS: 33kg

TITLE: MACHINE SHOP CORNER HANDRAILS DRAWING

3RD ANGLE PROJECTION:

SCALE:1:20

DO NOT SCALE DRAWING

A3

SHEET 1 OF 4

REVISION **A**

FILE LOCATION: W:\ DRAWINGS\MACHINE SHOP CORNER HANDRAILS - 959\5. SW\

NOTES

1. TARE: 65kg
2. ALL STEELWORK TO BE IN ACCORDANCE WITH AS3678 AND AS3679 U.O.S.
3. PLATEWORK TO BE GRADE 250. CLOSED HOLLOW SECTIONS TO BE GRADE 350.
4. ALL STEELWORK AND PLATEWORK FABRICATION TO COMPLY WITH AS 4100-1998
5. ALL WELDING TO AS1554 - CATEGORY SP U.O.S.
6. ALL WELDS TO BE CONTINOUS FILLET WELDS U.O.S.
7. ALL WELDS TO BE EQUAL TO MINIMUM THICKNESS OF PLATE U.O.S.
8. ALL SHARP EDGES TO BE REMOVED.
9. FINISH: SEE BLUE SHEET.

ITEM NO.	QTY.	DESCRIPTION	MATERIAL	LENGTH	THK.
1	1	40x40x2.5 SHS	AS NZS 3678 GR350	536	
2	1	33.7x4.0 CHS	AS NZS 3678 GR350	2125	
3	2	100x100x3.0 SHS	AS NZS 3678 GR350	1100	
4	1	6PL BASE PLATE	AS NZS 3678 GR250	1000	6
5	1	STOPPER PLATE	AS NZS 3678 GR250	147	4
6	4	FORK TYNE POCKETS	AS NZS 3678 GR250	423	6
7	2	SPRING HINGES	AS NZS 3678 GR250		

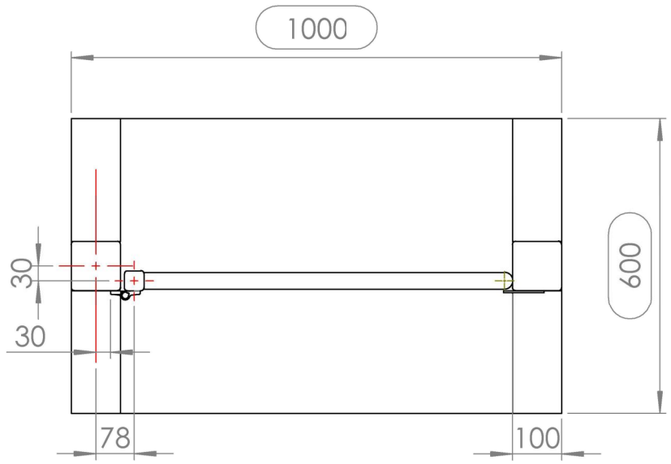

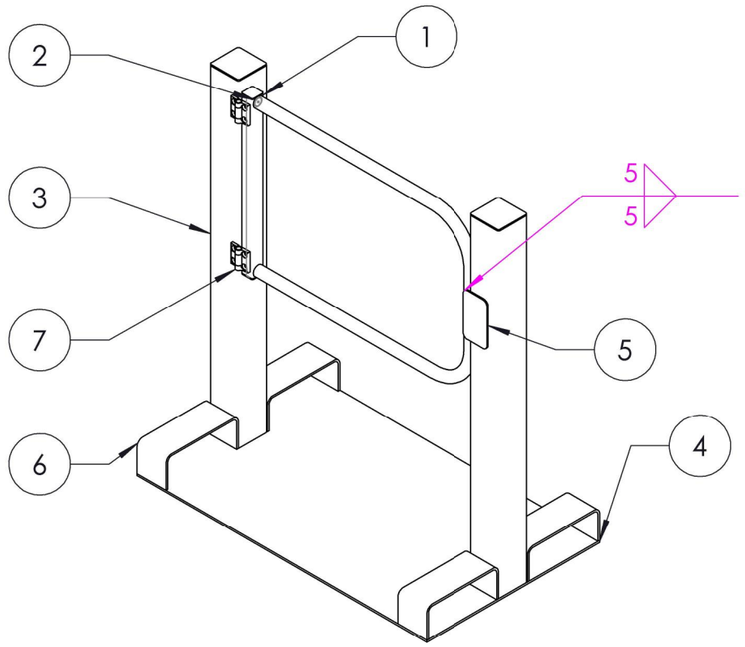

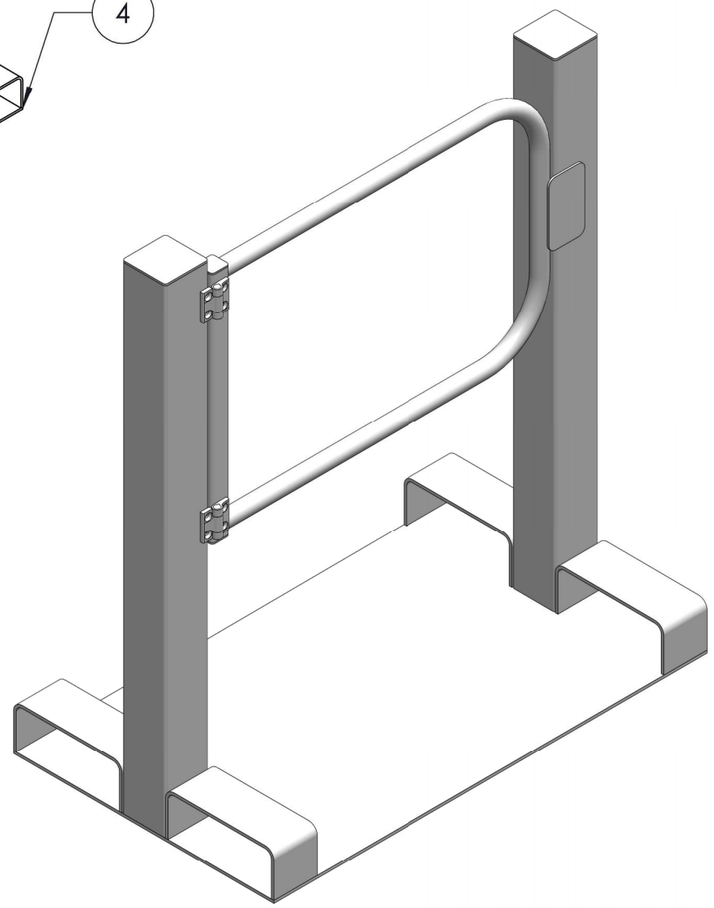

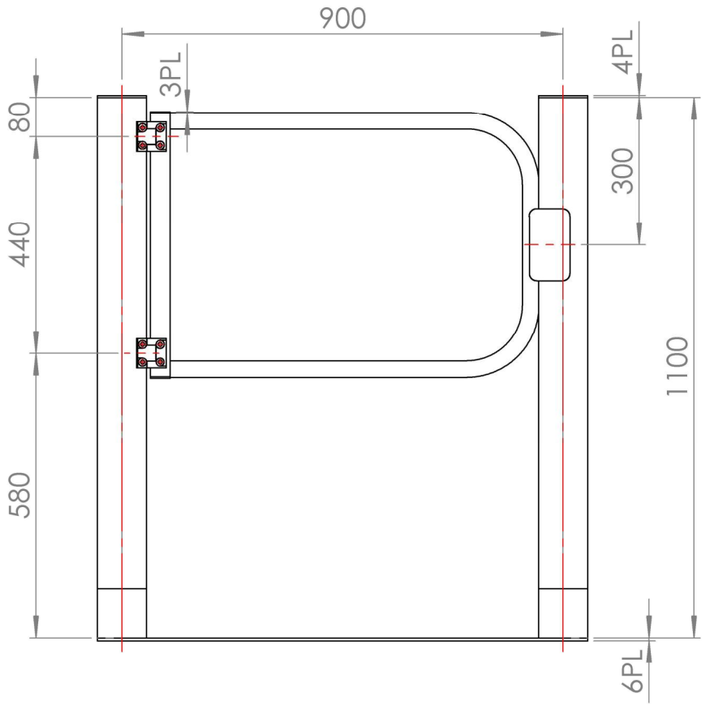

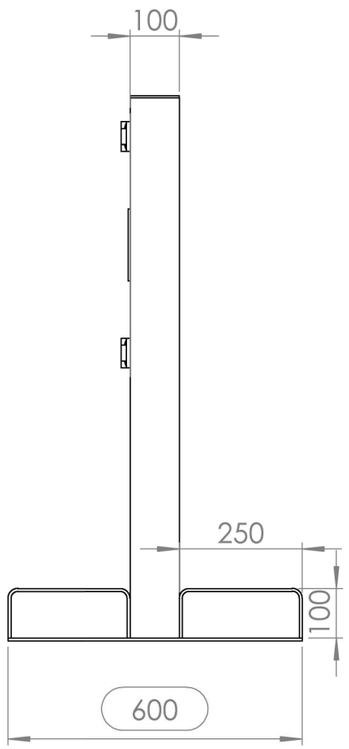

	NAME	DATE
DRAWN	DS	4/11/2025
CHK'D		
APPV'D		

UNLESS OTHERWISE SPECIFIED DIMENSIONS ARE IN MILLIMETERS. TOLERANCES: LINEAR: 0.5mm, ANGULAR: 0.5°

DRAFTING STANDARD AS1100

DEBURR AND BREAK SHARP EDGES

MASS: 65KGs

TITLE: EXCLUSIVE CONTROL GATES - 299

3RD ANGLE PROJECTION:

SCALE:1:20

DO NOT SCALE DRAWING

A3

SHEET 1 OF 2

REVISION **A**

FILE LOCATION: W: \EXCLUSIVE CONTROL GATES - 2299\5. SW\

NOTES

1. TARE: 16.3 KG
2. ALL ALUMINIUM TO BE IN ACCORDANCE WITH AS/NZ 1734, AS/NZ 1866 AND AS/NZ 1865 U.N.O
3. ALL ALUMINIUM AND PLATEWORK FABRICATION TO COMPLY WITH AS/NZ 1734-1997.
4. ALL WELDING TO AS/NZ 1665 - 2004 - CATEGORY SP UNO
5. ALL WELDS TO BE EQUAL TO MINIMUM THICKNESS OF PLATE.
6. ALL WELD TO BE CONTINOUS FILLET WELDS U.N.O
7. ALL SHARP EDGES TO BE REMOVED.
8. FINISH: SEE BLUE SHEET

ITEM	QTY	PART NAME	MATERIAL	THK.
1	1	A325ASM12 SERRATED GRATING - 1290 X 990	ALUMINIUM	5
2	1	GRATING FRAME PLATE - 1300 X 1000	ALUMINIUM	5
3	2	HAND HOLD CUT OUT	ALUMINIUM	5

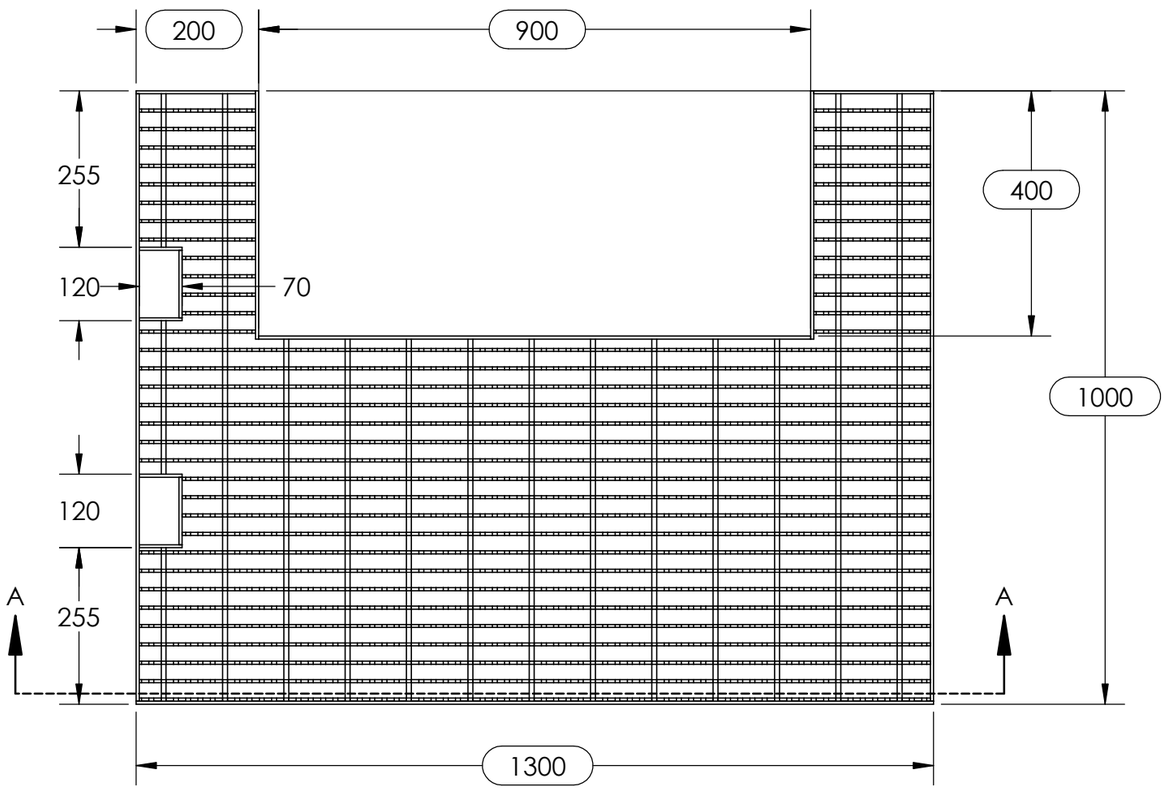

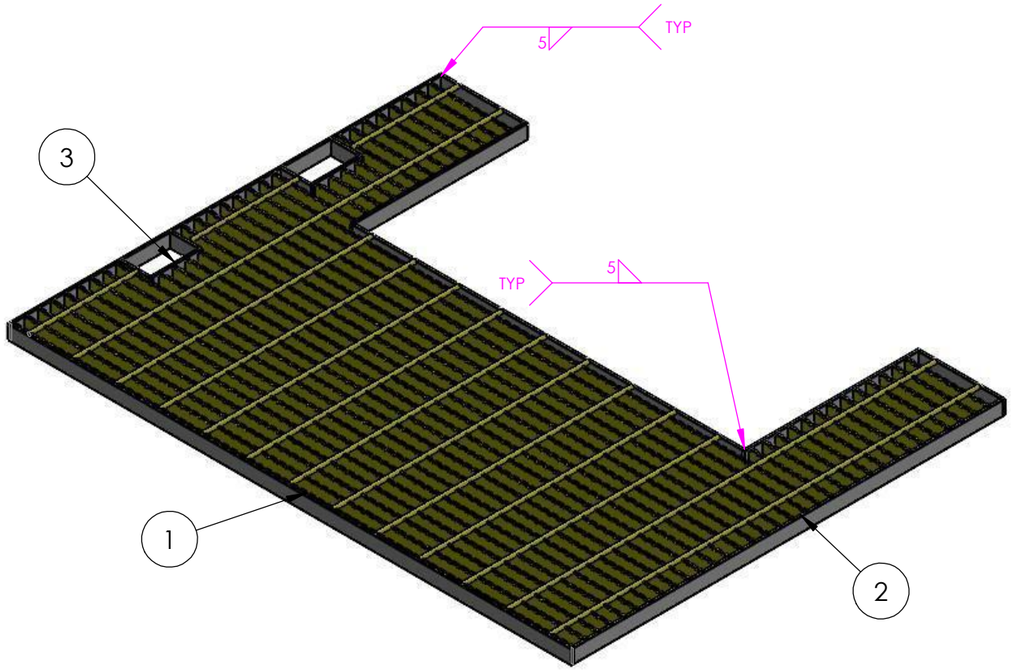

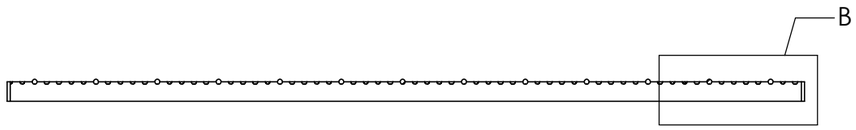

SECTION A-A
SCALE 1 : 10

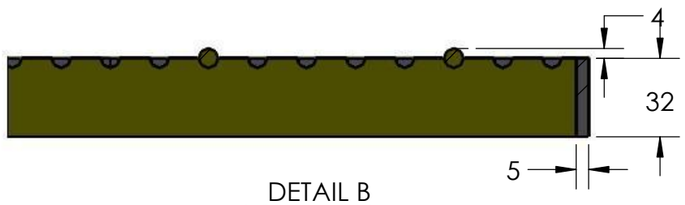

DETAIL B
SCALE 1 : 2.5

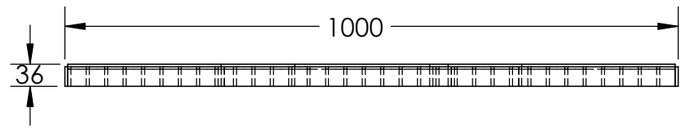

PLASMA PROG
MOBILE WORKSHOP

- 5MM -

	NAME	DATE
DRAWN	DS	31/03/2026
CHK'D		
APPV'D		

UNLESS OTHERWISE SPECIFIED DIMENSIONS ARE IN MILLIMETERS. TOLERANCES: LINEAR: 0.5mm, ANGULAR: 0.5°

DRAFTING STANDARD AS1100
DEBURR AND BREAK SHARP EDGES
MASS: 48kg

TITLE: MOBILE WORKSHOP ALI STAIR GRATE -

3RD ANGLE PROJECTION:
SCALE:1:20
DO NOT SCALE DRAWING
A3
SHEET 1 OF 6
REVISION **A**

FILE LOCATION: W:\ \MOBILE WROSKHOP ALI STAIR GRATE - FMG-12340\5. SW\

NOTES
1. TARE: 75KG
2. ALL STEELWORK TO BE IN ACCORDANCE WITH AS3678 AND AS3679 U.O.S.
3. PLATEWORK TO BE GRADE 250. CLOSED HOLLOW SECTIONS TO BE GRADE 350.
4. ALL STEELWORK AND PLATEWORK FABRICATION TO COMPLY WITH AS 4100-1998
5. ALL WELDING TO AS1554 - CATEGORY SP U.O.S.
6. ALL WELDS TO BE CONTINOUS FILLET WELDS U.O.S.
7. ALL WELDS TO BE EQUAL TO MINIMUM THICKNESS OF PLATE U.O.S.
8. ALL SHARP EDGES TO BE REMOVED.
9. TIMBER SLATS BY CLIENT/ OTHERS. REFER TO PROJECT SPECIFICATION.
10. CHS LENGTH SHOWN IS THE FABRICATION CUT LENGTH. FINAL ASSEMBLY HEIGHT IS ADJUSTABLE BY LEVELLING FOOT.
11. FINISH: SEE BLUE SHEET.

ITEM	QTY	PART NAME	MATERIAL	SOURCE
1	1	JF3 CURVE PLATES	SEE DRAWING	IN-HOUSE
2	2	LEGS ASSEMBLY	SUPPLIER SPECIFICATION	SEE DRAWING
3	2	MIRRORLEGS ASSEMBLY	SUPPLIER SPECIFICATION	SEE DRAWING
4	8	SOCKET SET SCREW, M8X16	SUPPLIER SPECIFICATION	PURCHASED

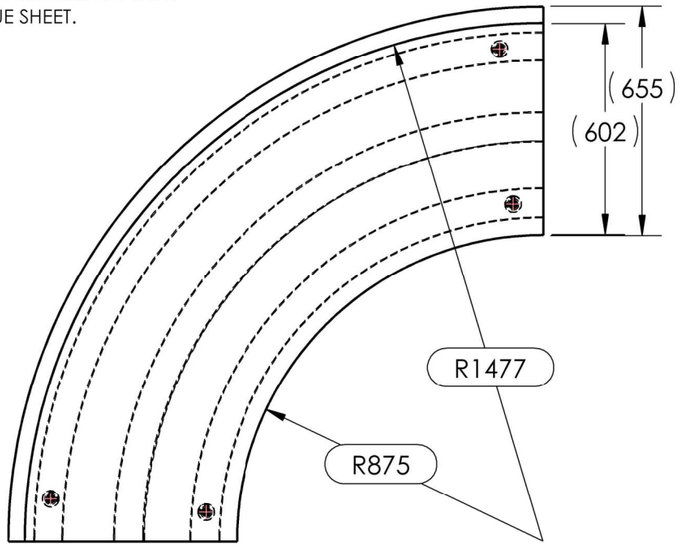

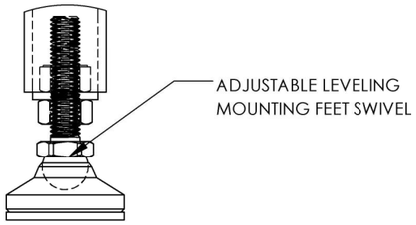

DETAIL A
SCALE 1 : 2.5

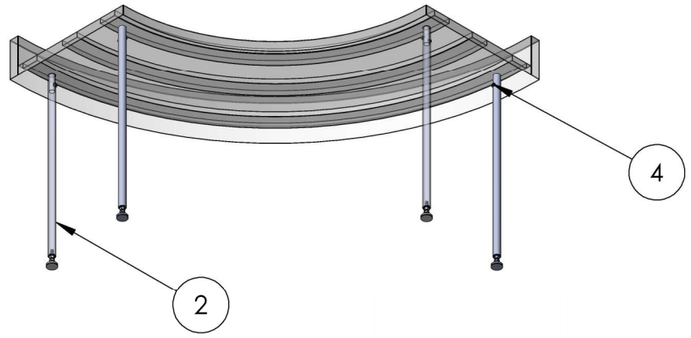

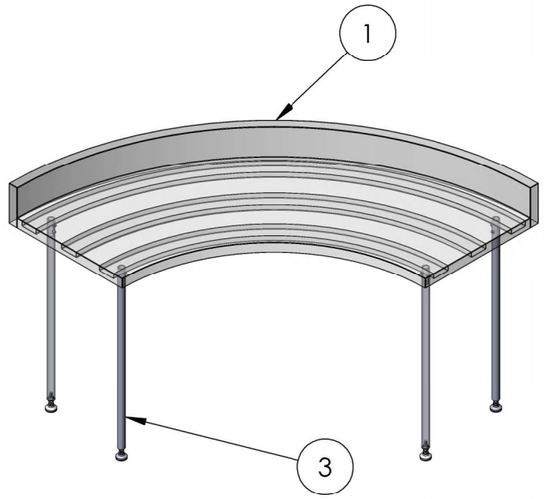

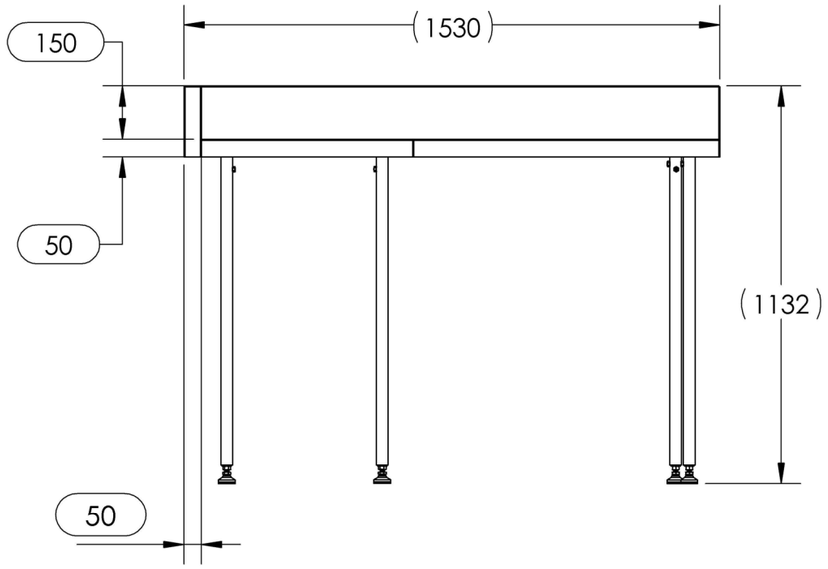

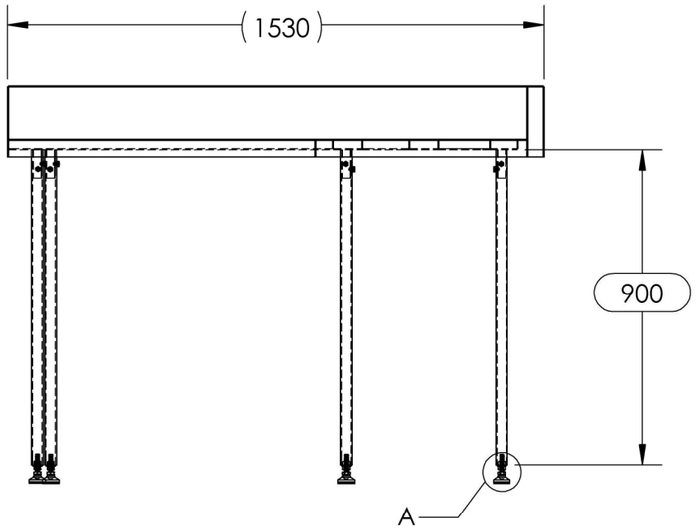

NOTE : 900 mm CUT LENGTH.
FINAL HEIGHT ADJUSTABLE VIA M12 LEVELLING FOOT.

PLASMA PROGRAM:
SS 304 JF3 Joinery - 3MM -

	NAME	DATE
DRAWN	DS	29/07/2026
CHK'D		
APPV'D		

UNLESS OTHERWISE SPECIFIED DIMENSIONS ARE IN MILLIMETERS. TOLERANCES: LINEAR: 0.5mm, ANGULAR: 0.5°

DRAFTING STANDARD AS1100
DEBURR AND BREAK SHARP EDGES
MASS: 75kg

TITLE: SS 304 JF3 JOINERY -
3RD ANGLE PROJECTION:
SCALE:1:20
DO NOT SCALE DRAWING
A3
SHEET 1 OF 8
REVISION A

FILE LOCATION: W:\ SS 304 JF JOINERY CW 150mm SPASHBACK & 50mm FRONT LIP - \5. SW\

NOTES

1. TARE: 41kg
2. ALL STEELWORK TO BE IN ACCORDANCE WITH AS3678 AND AS3679 U.O.S.
3. PLATEWORK TO BE GRADE 250. CLOSED HOLLOW SECTIONS TO BE GRADE 350.
4. ALL STEELWORK AND PLATEWORK FABRICATION TO COMPLY WITH AS 4100-1998
5. ALL WELDING TO AS1554 - CATEGORY SP U.O.S.
6. ALL WELDS TO BE CONTINOUS FILLET WELDS U.O.S.
7. ALL WELDS TO BE EQUAL TO MINIMUM THICKNESS OF PLATE U.O.S.
8. ALL SHARP EDGES TO BE REMOVED.
9. FINISH: SEE BLUE SHEET.

ITEM	QTY	PART NAME	MATERIAL	LENGTH	THK.
1	1	STEEL PIANO HINGE WITHOUT HOLES	LOW-CARBON STEEL		
2	1	LID BODY 01	AS NZS 3678 GR250	761	3
3	1	LID BODY 02	AS NZS 3678 GR250	762	3
4	2	LID HANDLE	AS NZS 3678 GR250	245	3

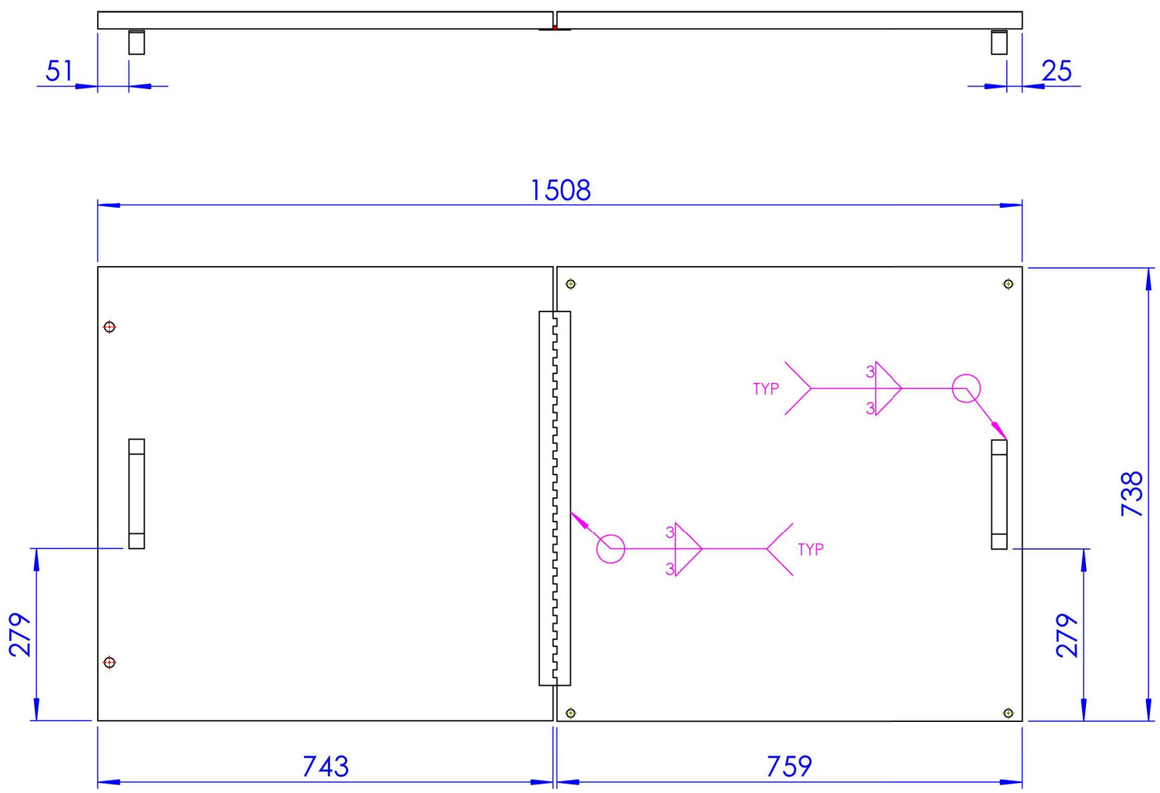

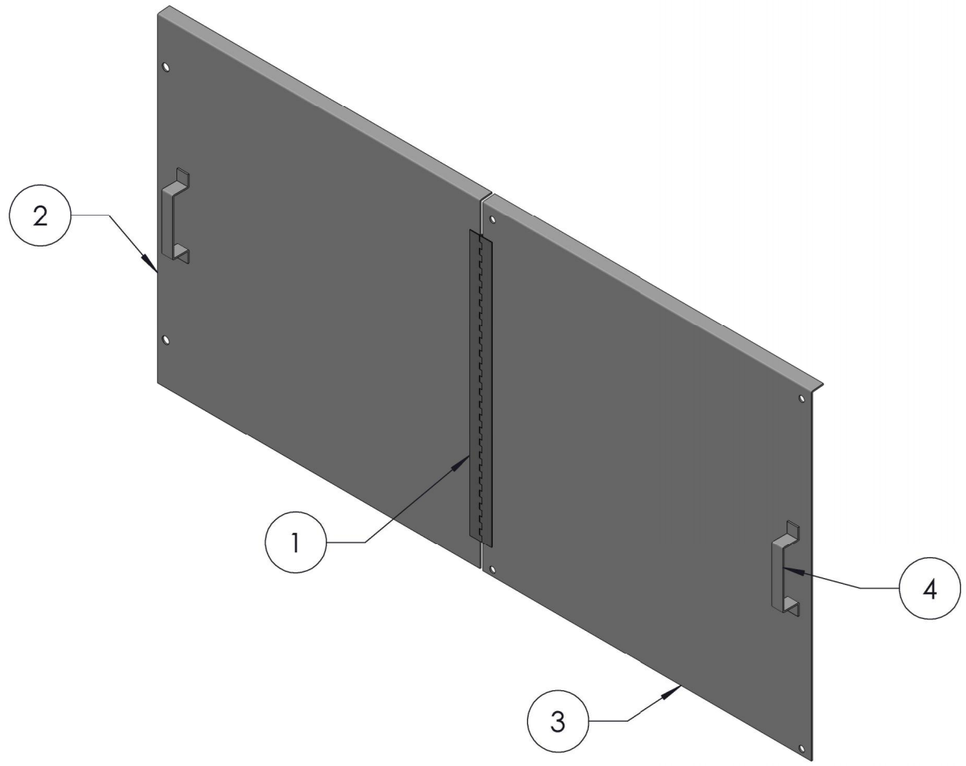

PLASMA PROGRAM:

MILD STEEL LIDS - LH&RH c/w CONTINOUS HINGE - 3MM - PAINTED 2P -

	NAME	DATE
DRAWN	DS	15/12/2025
CHK'D		
APPV'D		

UNLESS OTHERWISE SPECIFIED DIMENSIONS ARE IN MILLIMETERS. TOLERANCES: LINEAR: 0.5mm, ANGULAR: 0.5°

DRAFTING STANDARD AS1100

DEBURR AND BREAK SHARP EDGES

MASS: 41KGs

TITLE: LID ASSEMBLY_ LH & RH WITH CONTINUOUS HINGE _

3RD ANGLE PROJECTION:

SCALE:1:10

DO NOT SCALE DRAWING

A3

SHEET 1 OF 3

REVISION **A**

FILE LOCATION: W:\ \3MM MILD STEEL LIDS - LH & RH CW CONTINUOS HINGE - \5. SW\

NOTES
1. TARE: 59KG
2. ALL STEELWORK TO BE IN ACCORDANCE WITH AS3678 AND AS3679 U.O.S.
3. PLATEWORK TO BE GRADE 250. CLOSED HOLLOW SECTIONS TO BE GRADE 350.
4. ALL STEELWORK AND PLATEWORK FABRICATION TO COMPLY WITH AS 4100-1998
5. ALL WELDING TO AS1554 - CATEGORY SP U.O.S.
6. ALL WELDS TO BE CONTINOUS FILLET WELDS U.O.S.
7. ALL WELDS TO BE EQUAL TO MINIMUM THICKNESS OF PLATE U.O.S.
8. ALL SHARP EDGES TO BE REMOVED.
9. FINISH: SEE BLUE SHEET.

ITEM	QTY	PART NAME	MATERIAL	THK
1	1	NITROGEN BOX OUTER 706 X 606	ALUMINIUM	
2	1	NITROGEN BOX INNER 606 X 506	ALUMINIUM	
3	1	NITROGEN BOX LOCK PLATE	ALUMINIUM	
4	1	NITROGEN BOX TOP PLATE	ALUMINIUM	
5	1	NITROGEN BOX LID	ALUMINIUM	
6	4	NITROGEN BOX HINGE	ALUMINIUM	
7	4	SWIVEL BRAKE WHEEL URETHANE J32TZ85K125	URETHANE 125	
8	2	NUT - M8 WELDNUT	-	
9	2	BOLT - M20 X 50-N	-	
10	2	WASHER - M20	-	
11	2	BOLT - M12 X 40-N	-	
12	2	NUT - M12 WELDNUT	-	
13	2	WASHER - M12	-	
14	16	ALUMINIUM RIVET NUT- M8 X 1.25	ALUMINUM	
15	16	BOLT - M8 X 40 -N	-	
16	16	WASHER - M8	-	

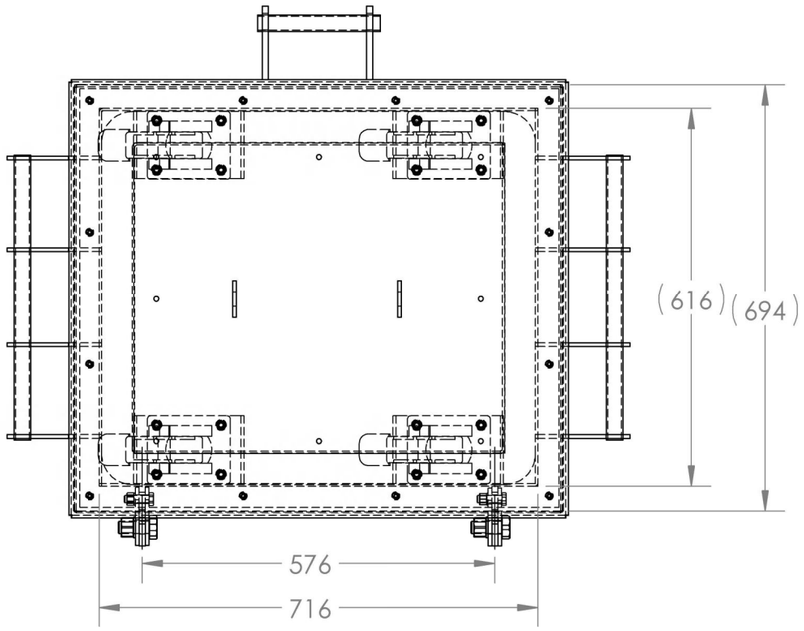

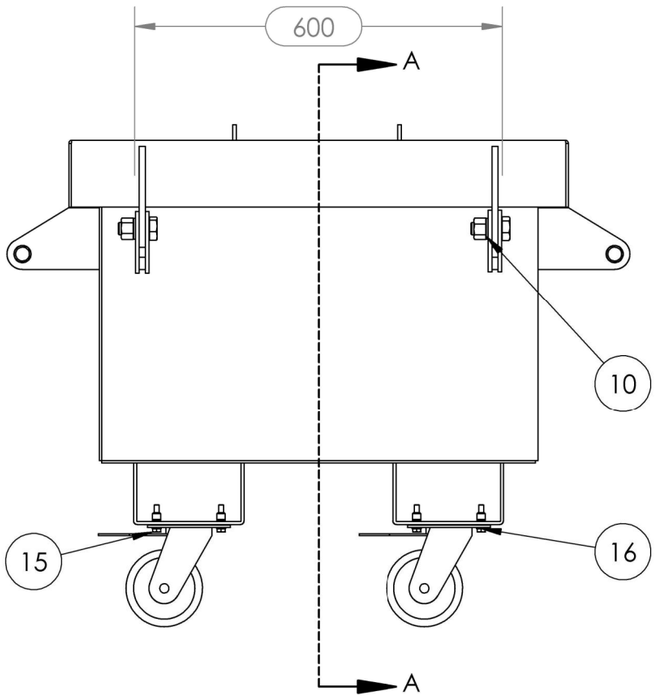

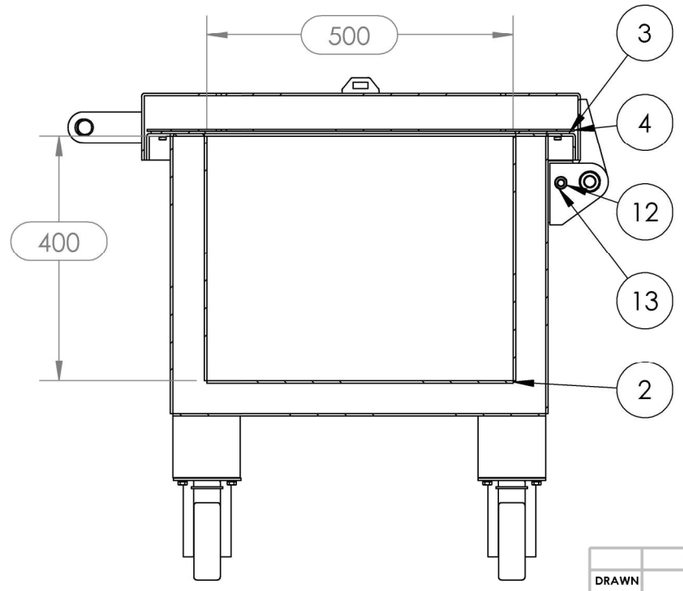

SECTION A-A

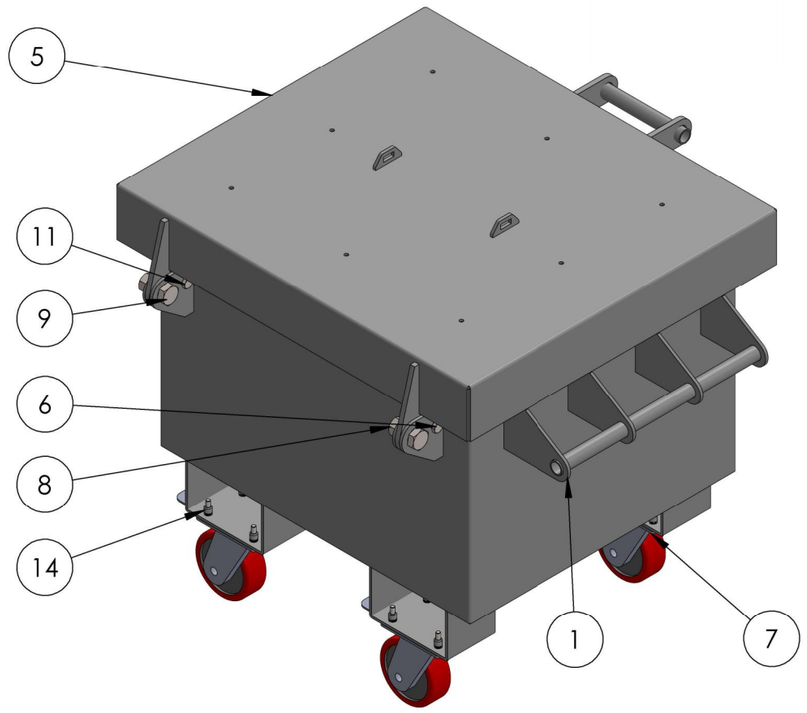

	NAME	DATE
DRAWN	DS	11/03/2026
CHK'D		
APPV'D		

UNLESS OTHERWISE SPECIFIED DIMENSIONS ARE IN MILLIMETERS. TOLERANCES: LINEAR: 0.5mm, ANGULAR: 0.5°

DRAFTING STANDARD AS1100

DEBURR AND BREAK SHARP EDGES

MASS: 59kg

TITLE: ALUMINIUM LIQUID NITROGEN CONTAINER -

3RD ANGLE PROJECTION:

SCALE:1:10

DO NOT SCALE DRAWING

A3

SHEET 1 OF 7

REVISION A

FILE LOCATION: W:\ \ALUMINIUM LIQUID NITROGEN CONTAINER (INTERNAL DIMS. L600 X D400, H500MM) - 5. SW\NITROGEN BOX\

NOTES
1. TARE: 97.1 KG
2. ALL STEELWORK TO BE IN ACCORDANCE WITH AS3678 AND AS3679 U.N.O
3. PLATEWORK TO BE GRADE 250. CLOSED HOLLOW SECTIONS TO BE GRADE 350.
4. ALL STEELWORK AND PLATEWORK FABRICATION TO COMPLY WITH AS 4100-1998
5. ALL WELDING TO AS1554 - CATEGORY SP UNO
6. ALL WELDS TO BE 5mm CONTINOUS FILLET WELDS U.N.O
7. FINISH: SEE BLUE SHEET

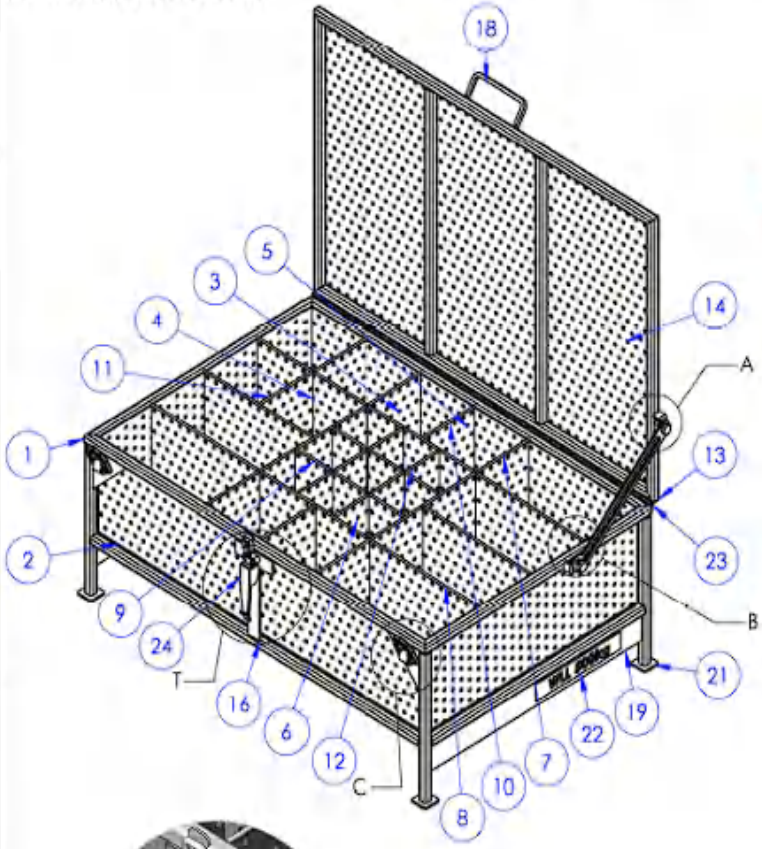

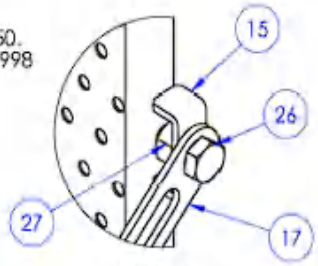

DETAIL A
SCALE 1 : 3

TIGHTEN BOLTS SECURELY AT THE LID MOUNTING LOCATION.

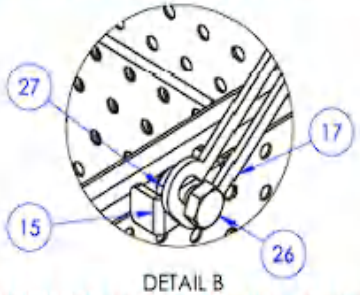

DETAIL B

BOLT ON LOOSE FOR THE FRAME LEAVE 2mm GAP IN BETWEEN

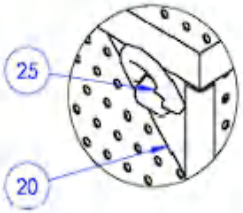

DETAIL C
SCALE 1 : 5

CENTRE LASHING PLATE ON SHS. MAINTAIN APPROX. 7.5 mm CLEARANCE FROM SHS FRONT FACE.

USE HD OC LATCH
WITH SMALLER CATCH POSITION
AT BOX CENTRE TO SUIT

DETAIL T
SCALE 1 : 5

BOM TABLE						
ITEM	QTY	DESCRIPTION	MATERIAL	CUT LENGTH	SOURCE	THK.
1	1	BHP BASKET FRAME (SHS 25X3)	AS NZS 3678 GR350	SEE DRAWING	INHOUSE	
2	1	PERFORATED BASE	AS NZS 3678 GR250	GILLO	INHOUSE	1.6
3	2	DIVIDER - 1	AS NZS 3678 GR250	GILLO	INHOUSE	1.6
4	10	DIVIDER - 2	AS NZS 3678 GR250	GILLO	INHOUSE	1.6
5	4	DIVIDER - 3	AS NZS 3678 GR250	GILLO	INHOUSE	1.6
6	6	DIVIDER - 4	AS NZS 3678 GR250	GILLO	INHOUSE	1.6
7	2	RB6-1	AS NZS 3679.1 GR300	750	INHOUSE	
8	6	RB6-2	AS NZS 3679.1 GR300	380	INHOUSE	
9	4	RB6-3	AS NZS 3679.1 GR300	375	INHOUSE	
10	3	RB6-4	AS NZS 3679.1 GR300	185	INHOUSE	
11	1	RB6-5	AS NZS 3679.1 GR300	181	INHOUSE	
12	6	RB6-6	AS NZS 3679.1 GR300	119	INHOUSE	
13	1	LID FRAME	AS NZS 3678 GR250	SEE DRAWING	INHOUSE	
14	1	LID PERF	AS NZS 3678 GR250	SEE DRAWING	INHOUSE	1.6
15	2	LID MOUNT PRESS	AS NZS 3678 GR250	SEE DRAWING	INHOUSE	5
16	1	CATCH FITTING (T-SHAPE)	AS NZS 3678 GR250	SEE DRAWING	INHOUSE	5
17	1	TRACK PALLET	AS NZS 3678 GR250	SEE DRAWING	INHOUSE	5
18	1	BHP METSO BOX HANDLE	AS NZS 3678 GR250	SEE DRAWING	INHOUSE	10
19	2	COMPLIANCE PLATE 5mm PL	AS/NZS 3678 - GR250	SEE DRAWING	INHOUSE	5
20	4	LIFTING LUG MOUNTING PLATE	AS NZS 3678 GR250	SEE DRAWING	INHOUSE	10
21	4	SQUARE PLATE FEET (200X200MM)	AS NZS 3678 GR250	SEE DRAWING	INHOUSE	5
22	2	STICKER - WLL 500KG	PP FILM		STANDARD	0

PURCHASED COMPONENTS		BOM TABLE				
ITEM	QTY	DESCRIPTION	MATERIAL	CUT LENGTH	SOURCE	THK.
23	2	PIANO HINGE 40X1.6	SUPPLIER SPECIFICATION	1 200	PURCHASED	1.6
24	1	HD OC LATCH SET WITH CATCH TL SPARES SKU 13029	SUPPLIER SPECIFICATION		PURCHASED	
25	4	WELD-ON LIFTING POINT	SUPPLIER SPECIFICATION		PURCHASED	
26	2	BOLT, M16 X 30 GB,8	ZINC PLATED STEEL		PURCHASED	
27	2	WELD NUT,M16	ZINC PLATED STEEL		PURCHASED	

PERF PART CODE: (7.94 DIA, 9.55 CENTRES)

	NAME	DATE
DRAWN	DS	29/07/2026
CHK'D		
APPV'D		

DEBURR AND BREAK SHARP EDGES
DRAFTING STANDARD AS1100

TITLE: CERTIFIED PERFORATED BASKET_

3RD ANGLE PROJECTION | SCALE:1:20 | DO NOT SCALE DRAWING | A3

SHEET 1 OF 9 | REVISION A

PLASMA PROGRAMS

CERTIFIED PERFORATED PARTS BASKET -
CERTIFIED PERFORATED PARTS BASKET -
CERTIFIED PERFORATED PARTS BASKET -

Ask AI Assistant
Convert this PDF to another format

NOTES

1. TARE: 307KG
2. ALL STEELWORK TO BE IN ACCORDANCE WITH AS3678 AND AS3679 U.O.S.
3. PLATEWORK TO BE GRADE 250. CLOSED HOLLOW SECTIONS TO BE GRADE 350.
4. ALL STEELWORK AND PLATEWORK FABRICATION TO COMPLY WITH AS 4100-1998
5. ALL WELDING TO AS1554 - CATEGORY SP U.O.S.
6. ALL WELDS TO BE CONTINOUS FILLET WELDS U.O.S.
7. ALL WELDS TO BE EQUAL TO MINIMUM THICKNESS OF PLATE U.O.S.
8. ALL SHARP EDGES TO BE REMOVED.
9. FINISH: SEE BLUE SHEET.

ITEM	QTY	PART NAME	MATERIAL	LENGTH
1	2	200 X 100 X 5.0 RHS	AS NZS 3678 GR350	636
2	2	40X40X4.0 EA	AS NZS 3678 GR250	2861
3	2	40X40X4.0 EA	AS NZS 3678 GR250	620
4	3	40X40X4.0 EA	AS NZS 3678 GR250	614
5	1	BODY PANEL	AS NZS 3678 GR250	2930
6	1	LEFT SIDE PANEL	AS NZS 3678 GR250	682
7	1	RIGHT SIDE PANEL	AS NZS 3678 GR250	682
8	4	REMOVABLE MESH FLOOR PANEL	AS NZS 3678 GR250	714
9	1	SPLASH GUARD	AS NZS 3678 GR250	2870
10	1	KEROSENE BATH LID	AS NZS 3678 GR250	3056
11	2	GAS STRUT ASSEMBLY		
12	4	KEROSENE BATH LEG	AS NZS 3678 GR250	750
13	2	MIDDLE LEG SUPPORT ASSEMBLY	AS NZS 3678 GR250	571
14	6	FOOT PLATE	AS NZS 3678 GR250	90
15	2	LATCH PLATE	AS NZS 3678 GR250	104
16	1	METSO BOX HANDLE 10mm	AS/NZS 3678 - GR250	180
17	2	OJOP CATCH PART1	AS NZS 3678 GR250	
18	2	OJOP CATCH	ZINC PLATED MILD STEEL	
19	1	GUDGEN HINGE LH	AS NZS 3678 GR250	90
20	1	GUDGEN HINGE RH	AS NZS 3678 GR250	90
21	2	GUDGEN HINGE STRAP	AS NZS 3678 GR250	40
22	1	PUMP MODEL		
23	1	1 INCH BSP SOCKET	AS NZS 3678 GR250	

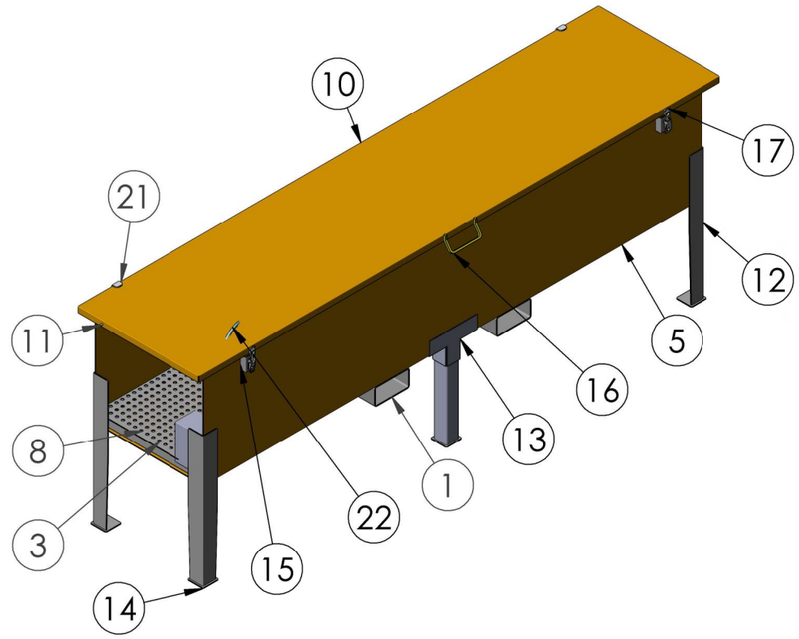

END PLATE HIDDEN FOR CLARITY

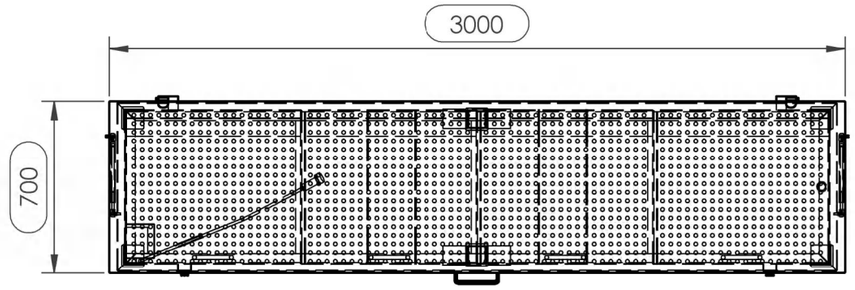

FLUID HOSE AND PUMP NOT SUPPLIED- SHOWN HERE FOR DEMONSTRATION PURPOSES

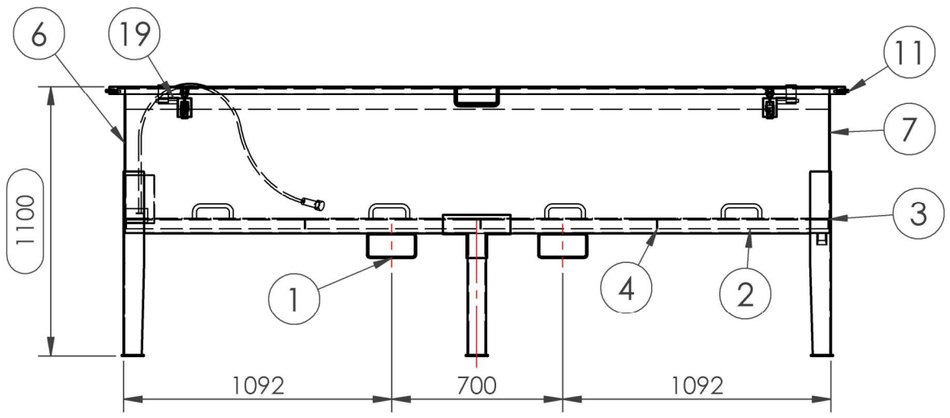

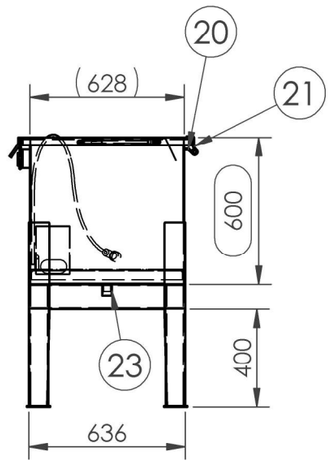

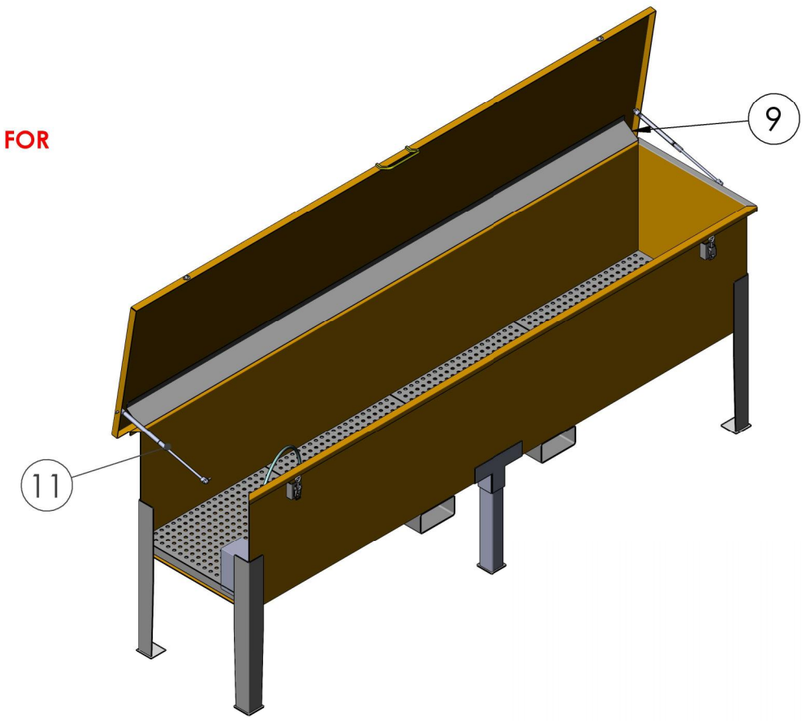

PLASMA PROGRAMS:
KEROSENE BATH 2mm - I
KEROSENE BATH 3mm - I
KEROSENE BATH 4mm - I

	NAME	DATE
DRAWN	DS	30/10/2025
CHK'D		
APPV'D		

DEBURR AND BREAK SHARP EDGES

DRAFTING STANDARD AS1100

UNLESS OTHERWISE SPECIFIED DIMENSIONS ARE IN MILLIMETERS. TOLERANCES: LINEAR: 0.5mm, ANGULAR: 0.5°

MASS: 307 kg

TITLE: KEROSENE BATH-

3RD ANGLE PROJECTION:

SCALE:1:12

DO NOT SCALE DRAWING

A3

SHEET 1 OF 10

REVISION A

NOTES

1. TARE: 159.9kg
2. ALL STEELWORK TO BE IN ACCORDANCE WITH AS3678 AND AS3679 U.O.S.
3. PLATEWORK TO BE GRADE 250. CLOSED HOLLOW SECTIONS TO BE GRADE 350.
4. ALL STEELWORK AND PLATEWORK FABRICATION TO COMPLY WITH AS 4100-1998
5. ALL WELDING TO AS1554 - CATEGORY SP U.O.S.
6. ALL WELDS TO BE CONTINOUS FILLET WELDS U.O.S.
7. ALL WELDS TO BE EQUAL TO MINIMUM THICKNESS OF PLATE U.O.S.
8. ALL SHARP EDGES TO BE REMOVED.
9. FINISH: SEE BLUE SHEET.

ITEM	QTY	PART NAME	MATERIAL
1	1	ROD TROLLEY	SEE DRAWING
2	1	ROD TROLLEY FOLLOWER	SEE DRAWING
3	4	EHI X2 SERIES 750KG 150mm POLYURETHANE FIXED CASTOR X23AZ95K150	
4	4	EHI X2 SERIES 750KG 150mm POLYURETHANE SWIVEL BRAKE CASTOR X22TZ95K150	
5	32	BOLT - HEX HEAD, M8 x 25	
6	32	NUT - HEX, M8	
7	32	WASHER - FLAT, M8	
8	2	CERTIFICATION PLATE	ALLOY STEEL (SS)
9	2	STICKER - WLL 4 TONNES	PP FILM

ORDER 2 x HARDCHROME SPECIFIC
CERTIFICATION PLATES 180MMX100MM

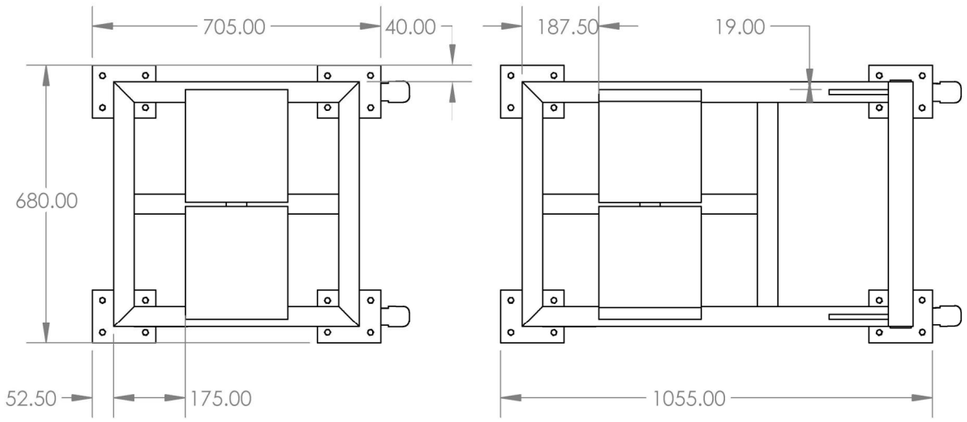

CERTIFICATION

ROD TROLLEY DOLLY SET
WLL 2T
TARE WEIGHT: 160 KG
CERTIFICATION NO: 14874
DRAWING NO: WELD-16778
SERIAL NO: TBA
COMPLIANCE DATE: 02/2026
MANUFACTURE DATE: TBA

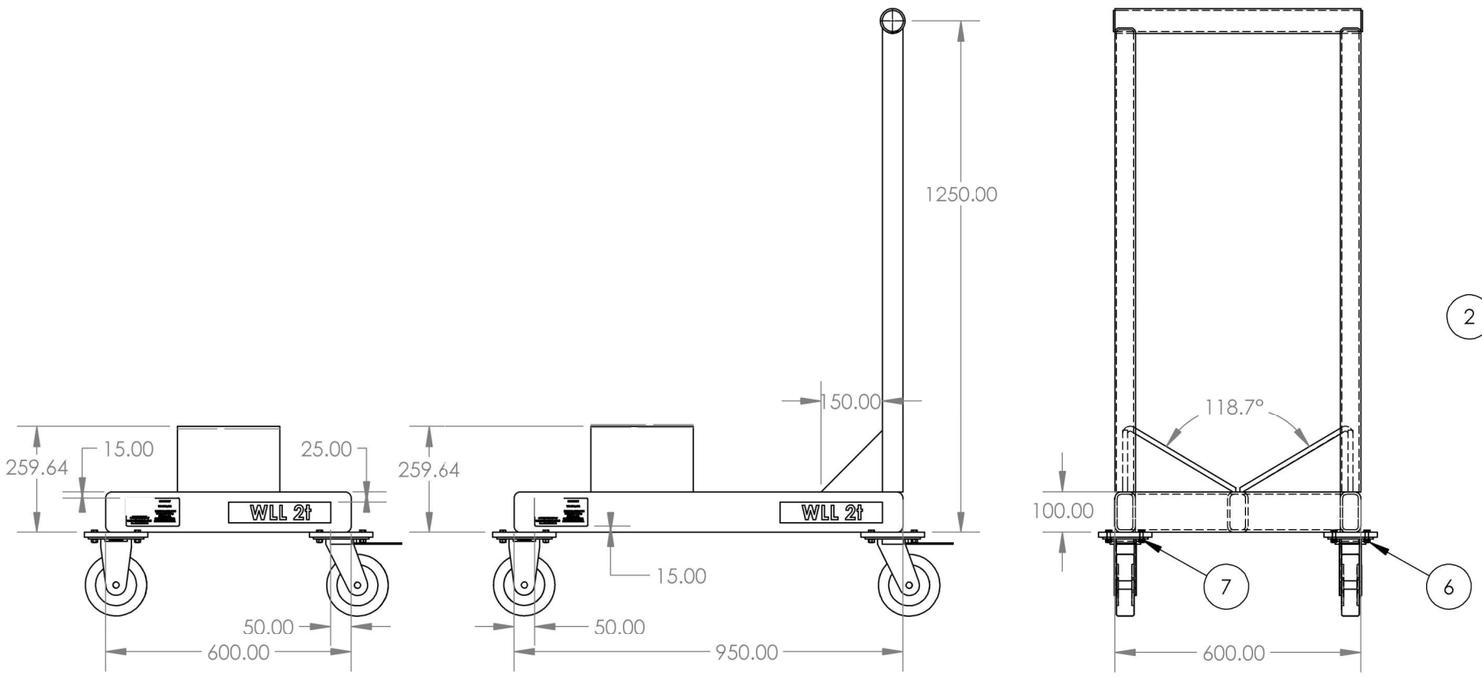

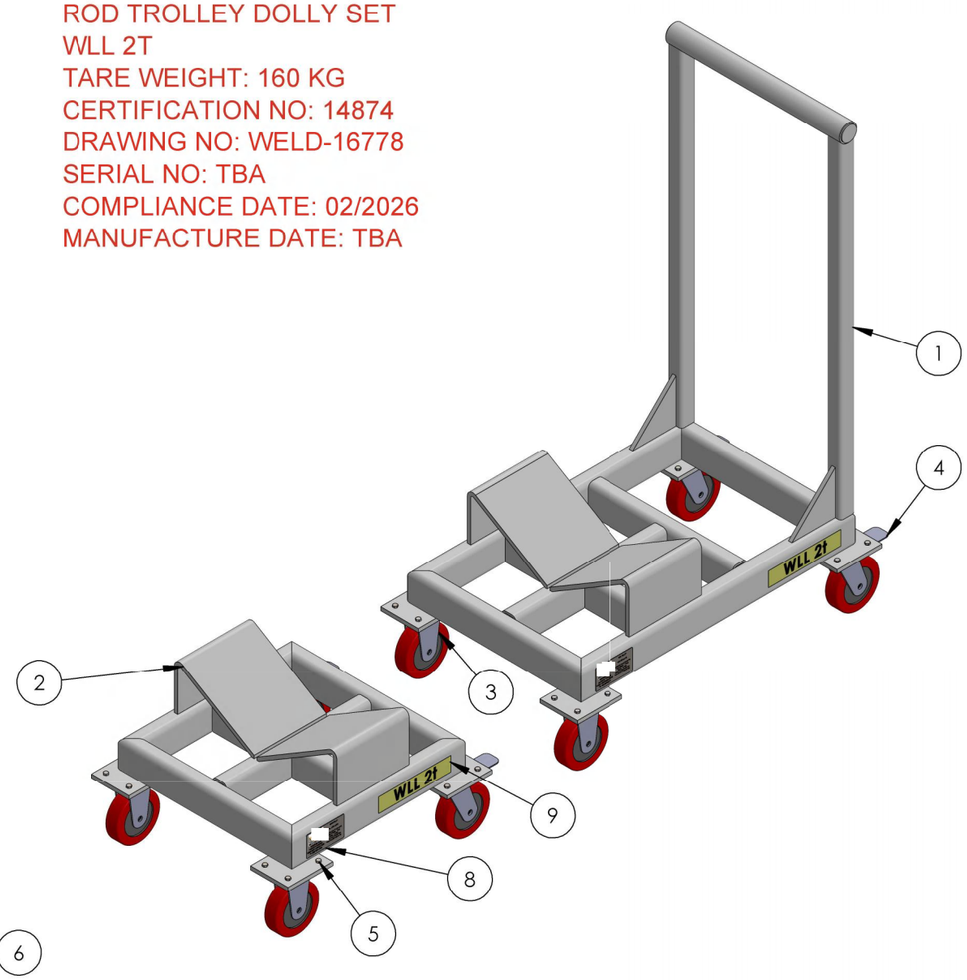

PLASMA PROGRAM:
ROD TROLLEY/DOLLY SET - 12MM -

	NAME	DATE
DRAWN	DS	19/02/2026
CHK'D		
APPV'D		

UNLESS OTHERWISE SPECIFIED DIMENSIONS ARE IN MILLIMETERS. TOLERANCES: LINEAR: 0.5mm, ANGULAR: 0.5°

DRAFTING STANDARD AS1100
DEBURR AND BREAK SHARP EDGES
MASS: 159.9KGs

TITLE: ROD TROLLEY OR DOLLY SET -

3RD ANGLE PROJECTION:
SCALE:1:50
DO NOT SCALE DRAWING
A3
SHEET 1 OF 6
REVISION A

FILE LOCATION: W:\ \ROD TROLLEY DOLLY SET \5. SW\

NOTES
1. TARE: 36KG
2. ALL STEELWORK TO BE IN ACCORDANCE WITH AS3678 AND AS3679 U.O.S.
3. PLATEWORK TO BE GRADE 250. CLOSED HOLLOW SECTIONS TO BE GRADE 350.
4. ALL STEELWORK AND PLATEWORK FABRICATION TO COMPLY WITH AS 4100-1998
5. ALL WELDING TO AS1554 - CATEGORY SP U.O.S.
6. ALL WELDS TO BE CONTINOUS FILLET WELDS U.O.S.
7. ALL WELDS TO BE EQUAL TO MINIMUM THICKNESS OF PLATE U.O.S.
8. ALL SHARP EDGES TO BE REMOVED.
9. FINISH: SEE BLUE SHEET.

ITEM	QTY	PART NAME	MATERIAL	THK.
1	1	MAIN BODY PLATE	AS NZS 3678 GR250	2
2	1	BODY PLATE RH	AS NZS 3678 GR250	2
3	1	BODY PLATE LH	AS NZS 3678 GR250	2
4	1	DOOR	316 STAINLESS STEEL	2
5	1	MTG PLATE 1	AS NZS 3678 GR250	5
6	1	MTG PLATE 2	AS NZS 3678 GR250	5
7	2	PINTLE HINGE AD81 -PART 1		
8	2	PINTLE HINGE AD81 -PART 2		
9	1	DROP T LOCK 3 WAY		
10	1	PINCH WELD SIDE BULB		
11	2	LIGHT GAUGE CHAIN	3mm GALVANIZED	

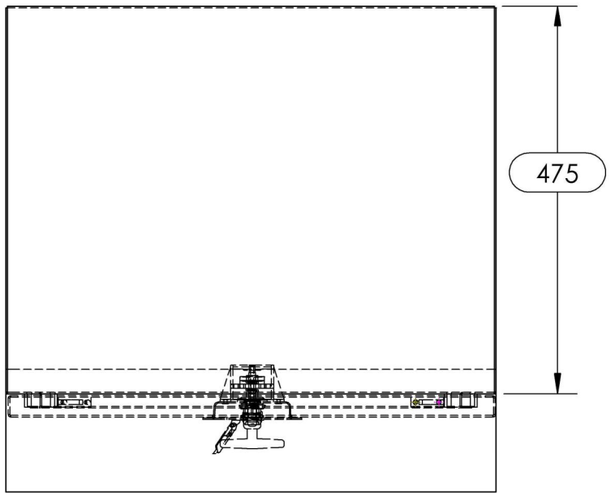

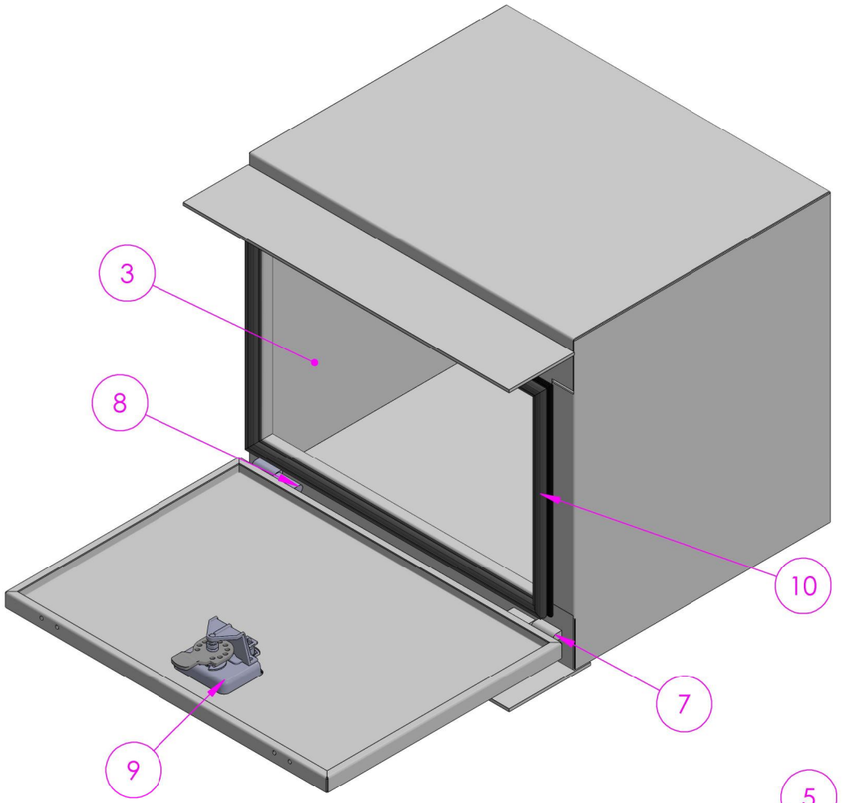

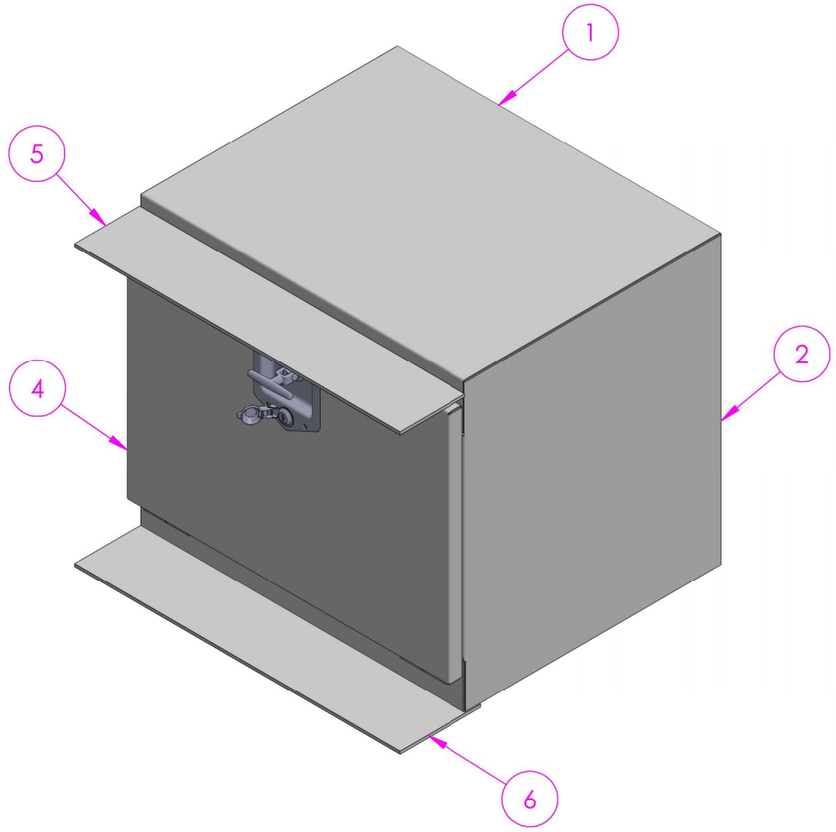

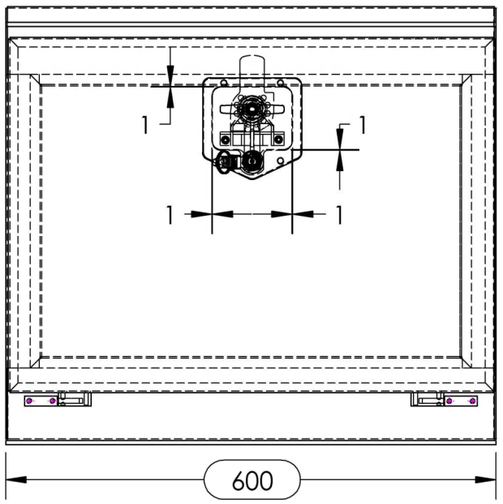

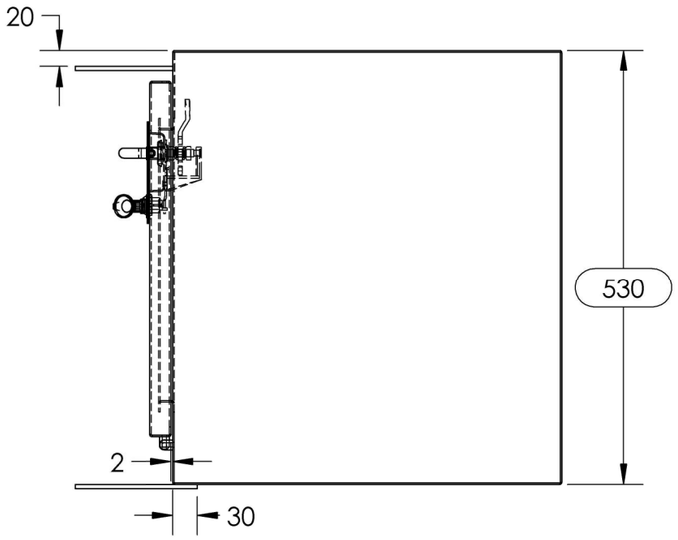

	NAME	DATE
DRAWN	DS	21/05/2026
CHK'D		
APPV'D		

UNLESS OTHERWISE SPECIFIED DIMENSIONS ARE IN MILLIMETERS. TOLERANCES: LINEAR: 0.5mm, ANGULAR: 0.5°

DRAFTING STANDARD AS1100
DEBURR AND BREAK SHARP EDGES
MASS: 36kg

TITLE: 2mm STEEL TOOLBOX -

3RD ANGLE PROJECTION:

SCALE:1:10
DO NOT SCALE DRAWING

A3

SHEET 1 OF 3

REVISION A

FILE LOCATION: W:\ \JASS CARTAGE & CONTRACTING\2MM STEEL TOOLBOX L600 X D475 X H530MM CW 316 SS DOOR WITH CHAINS - \5. SW\

NOTES

1. TARE: 31.4 KG
2. ALL ALUMINIUM TO BE IN ACCORDANCE WITH AS/NZ 1734, AS/NZ 1866 AND AS/NZ 1865 U.N.O
3. ALL ALUMINIUM AND PLATEWORK FABRICATION TO COMPLY WITH AS/NZ 1734-1997.
4. ALL WELDING TO AS/NZ 1665 - 2004 - CATEGORY SP UNO
5. ALL WELDS TO BE EQUAL TO MINIMUM THICKNESS OF PLATE.
6. ALL WELD TO BE CONTINOUS FILLET WELDS U.N.O
7. ALL SHARP EDGES TO BE REMOVED.
8. FINISH: SEE BLUE SHEET

ITEM	QTY	PART NAME	MATERIAL	THK.	SOURCE
1	1	FRAME WELDMENT	ALUMINIUM		IN-HOUSE
2	2	CHS 40X3 MALE SECTION	ALUMINIUM		IN-HOUSE
3	2	BASE PLATE , 10PL	ALUMINIUM	10	IN-HOUSE
4	1	TOP NOSING PLATE, 90° BEND	ALUMINIUM	1	PURCHASED
5	5	STEPS ASSEMBLY, YELLOW ABBRASIVE NOSING, 110° BEND	ALUMINIUM		PURCHASED
6	2	125mm POLY SPRING LOADED SWIVEL CASTOR WITH BRAKE	SUPPLIER SPECIFICATION		PURCHASED
7	8	BOLT M12 X 35	ZP		PURCHASED
8	8	PLAIN WASHER, M12	ZP		PURCHASED
9	8	NUT, M12	ZP		PURCHASED
10	1	STICKER WLL 120 KG	-		

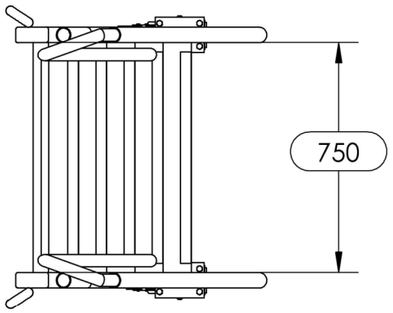

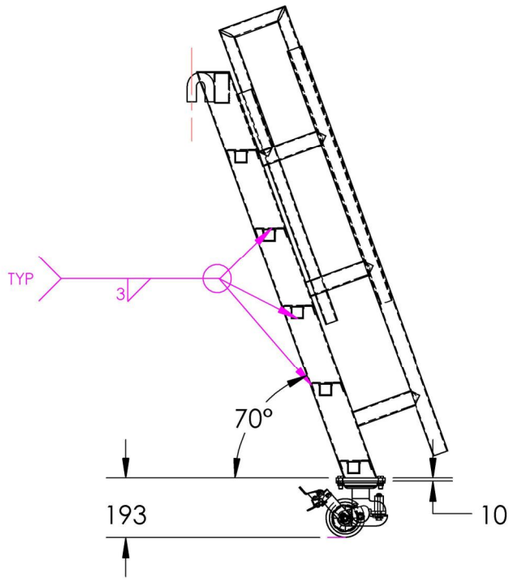

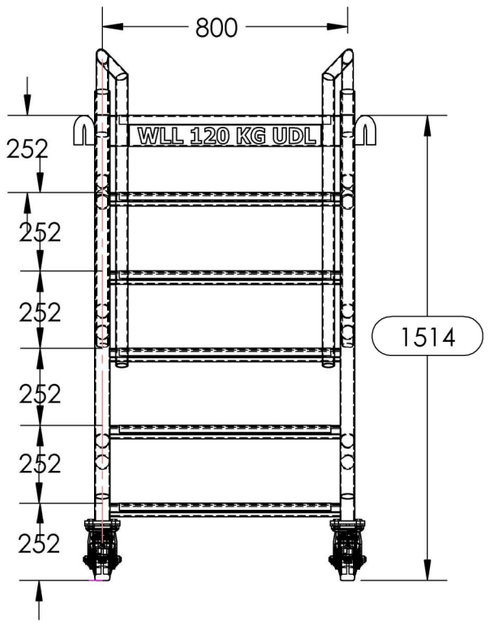

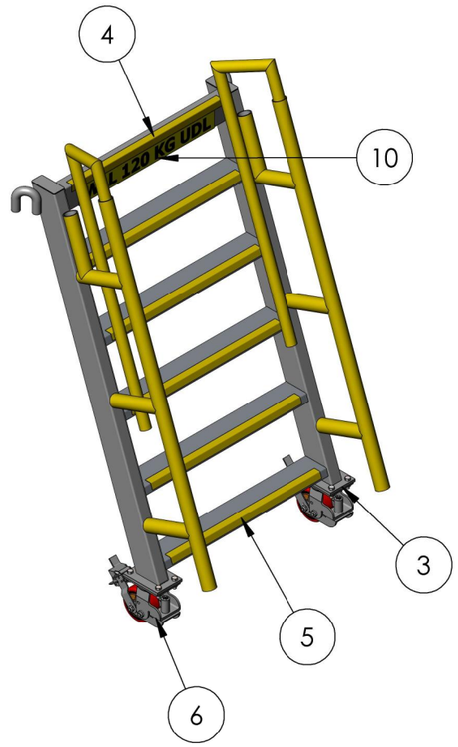

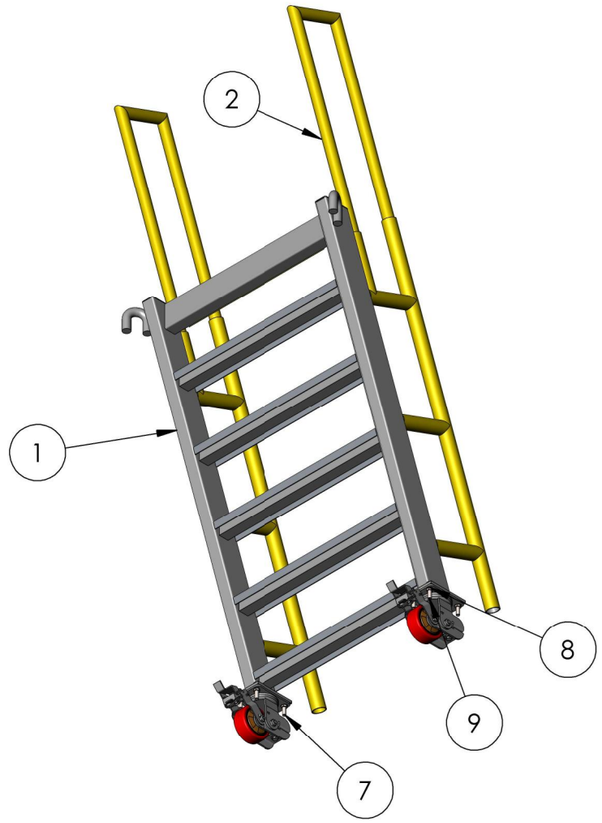

PLASMA PROGRAM:

PENSKIE PIT ALI STEP LADDER CW WITH TELESCOPIC GRABRAILS - 1MM - ALUMINIUM -
PENSKIE PIT ALI STEP LADDER CW WITH TELESCOPIC GRABRAILS - 10MM - ALUMINIUM

	NAME	DATE
DRAWN	DS	3/07/2026
CHK'D		
APPV'D		

UNLESS OTHERWISE SPECIFIED DIMENSIONS ARE IN MILLIMETERS. TOLERANCES: LINEAR: 0.5mm, ANGULAR: 0.5°

DRAFTING STANDARD AS1100

DEBURR AND BREAK SHARP EDGES

MASS: 31kg

TITLE: PENSKE PIT ALUMINIUM STEP LADDER 1514MM HIGH C/W TELESCOPIC GRABRAILS -

3RD ANGLE PROJECTION:

SCALE:1:20

DO NOT SCALE DRAWING

A3

SHEET 1 OF 5

REVISION **A**

NOTES

1. TARE: 97.0 KG
2. ALL STEELWORK TO BE IN ACCORDANCE WITH AS3678 AND AS3679 U.N.O
3. PLATEWORK TO BE GRADE 250. CLOSED HOLLOW SECTIONS TO BE GRADE 350.
4. ALL STEELWORK AND PLATEWORK FABRICATION TO COMPLY WITH AS 4100-1998
5. ALL WELDING TO AS1554 - CATEGORY SP UNO
6. ALL WELDS TO BE 5mm CONTINOUS FILLET WELDS U.N.O
7. FINISH: SEE BLUE SHEET

ITEM	QTY	PART NAME	MATERIAL	LENGTH	THK
1	1	BODY PRESS	AS NZS 3678 GR250		3
2	1	TOP PRESS	AS NZS 3678 GR250	952	3
3	1	BOTTOM PRESS	AS NZS 3678 GR250	952	3
4	2	125mm SWIVEL AND BRAKE CASTOR	-		
5	2	125mm FIXED CASTOR	-		
6	1	DOOR PRESS	AS NZS 3678 GR250	945	2
7	2	80mm WELD ON BULLET HINGE	STEEL		
8	2	80mm WELD ON BULLET HINGE FEMALE	STEEL		
9	1	DOOR CATCH	AS NZS 3678 GR250	47	5
10	1	PAD BOLT 150mm 12mm PART1	ZP		
11	1	HANDLE	AS NZS 3678 GR250	1073	
12	1	MID-SHELF	AS NZS 3678 GR250	952	2
13	16	BOLT - HEX HEAD, M8 X 20	ZP		
14	16	WASHER- FLAT , M8	ZP		
15	16	NUT - NYLOC, M8	ZP		
16	1	CUT-OUT COVER	STAINLESS STEEL		1.6
17	4	BLIND RIVET	STAINLESS STEEL		

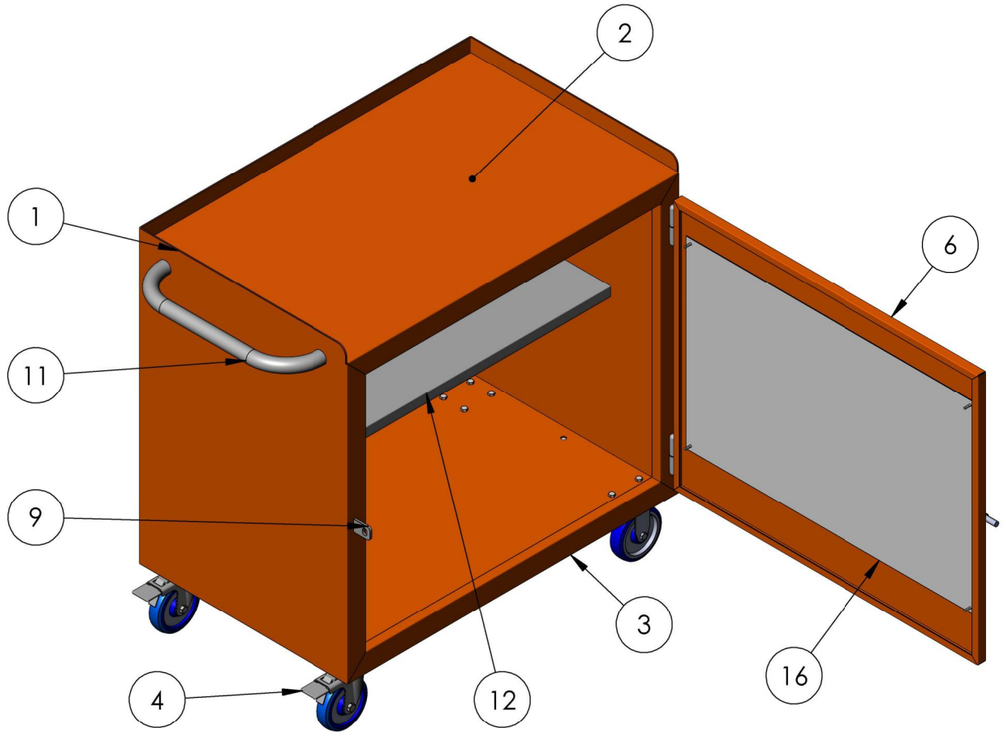

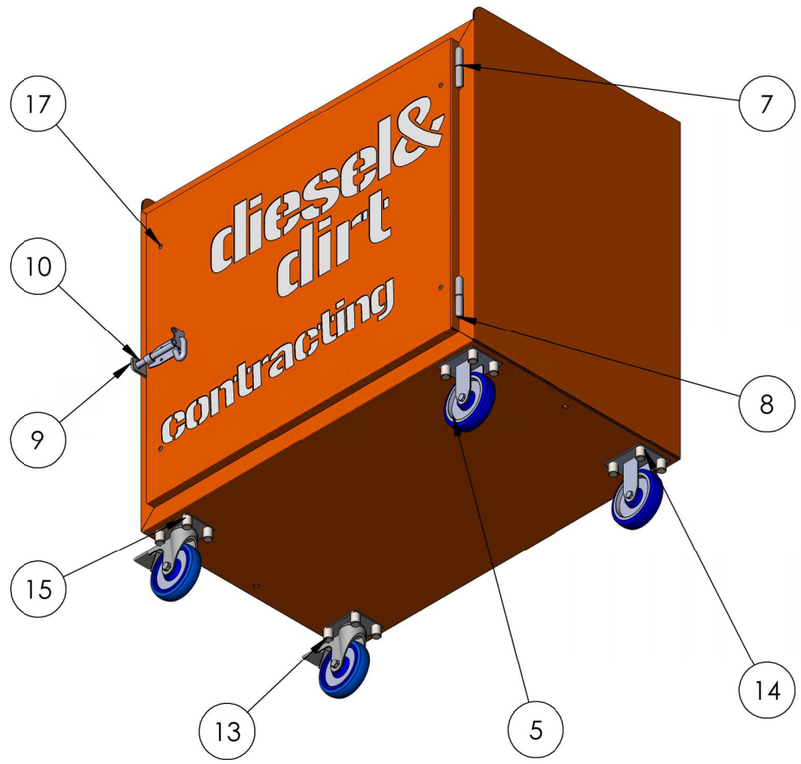

PLASMA PROGRAMS:
TOOL TROLLEY NO SHELF-1.6mm
TOOL TROLLEY NO SHELF-3mm-
TOOL TROLLEY STD SINGLE DOOR-5mm-

	NAME	DATE
DRAWN	DS	5/03/2026
CHK'D		
APPV'D		

DEBURR AND BREAK SHARP EDGES

DRAFTING STANDARD AS1100

UNLESS OTHERWISE SPECIFIED DIMENSIONS ARE IN MILLIMETERS. TOLERANCES: LINEAR: 0.5mm, ANGULAR: 0.5°

MASS: 97.0 kg

TITLE: TOOL TROLLEY C/W SHELF -

3RD ANGLE PROJECTION:

SCALE:1:20

DO NOT SCALE DRAWING

A3

SHEET 1 OF 4

REVISION B

NOTES

1. TARE: 78kg
2. ALL STEELWORK TO BE IN ACCORDANCE WITH AS3678 AND AS3679 U.O.S.
3. PLATEWORK TO BE GRADE 250. CLOSED HOLLOW SECTIONS TO BE GRADE 350.
4. ALL STEELWORK AND PLATEWORK FABRICATION TO COMPLY WITH AS 4100-1998
5. ALL WELDING TO AS1554 - CATEGORY SP U.O.S.
6. ALL WELDS TO BE CONTINOUS FILLET WELDS U.O.S.
7. ALL WELDS TO BE EQUAL TO MINIMUM THICKNESS OF PLATE U.O.S.
8. ALL SHARP EDGES TO BE REMOVED.
9. FINISH: SEE BLUE SHEET.

ITEM NO.	QTY.	DESCRIPTION	MATERIAL	LENGTH	THK.	MASS (KG)
1	1	BOTTOM TRAY 3PL	AS NZS 3678 GR250	1295	3	26
2	1	TOP TRAY 3PL	AS NZS 3678 GR250	1295	3	26
3	1	EXTENSION TRAY 3PL	AS NZS 3678 GR250	790	3	4
4	1	26.9X4.0 CHS	AS NZS 3678 GR250	1237		3
5	4	35X35X3.0 SHS	AS NZS 3678 GR350	744		2
6	2	CASTOR 125MM SWIVEL BRAKE	AS NZS 3678 GR250			3
7	2	CASTOR 125MM FIXED	AS NZS 3678 GR250			3
8	32	PLAIN WASHER M8	AS NZS 3678 GR250			0.001829
9	16	HEX BOLT M8 X 20	AS NZS 3678 GR250			0.013736
10	16	HEX NUT M8	AS NZS 3678 GR250			0.00674

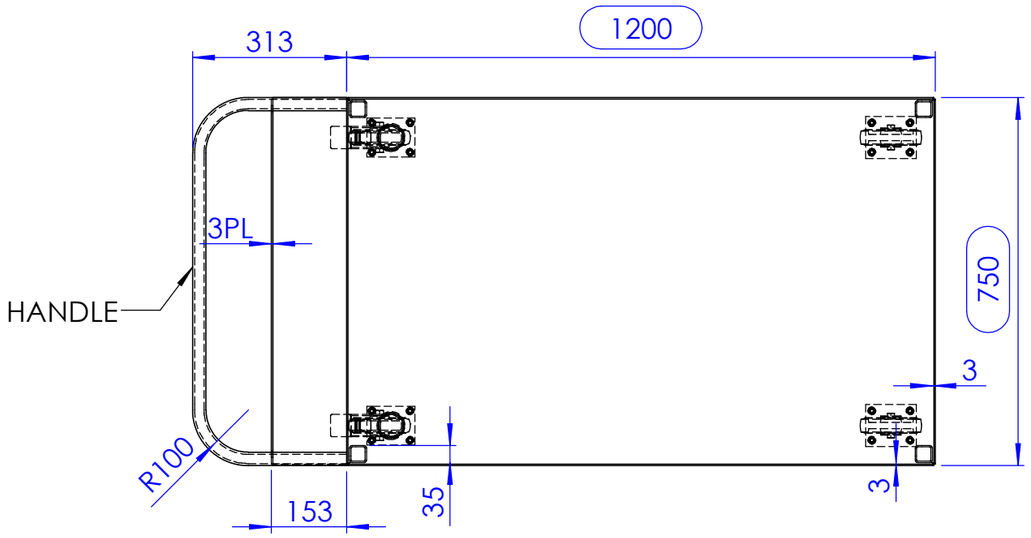

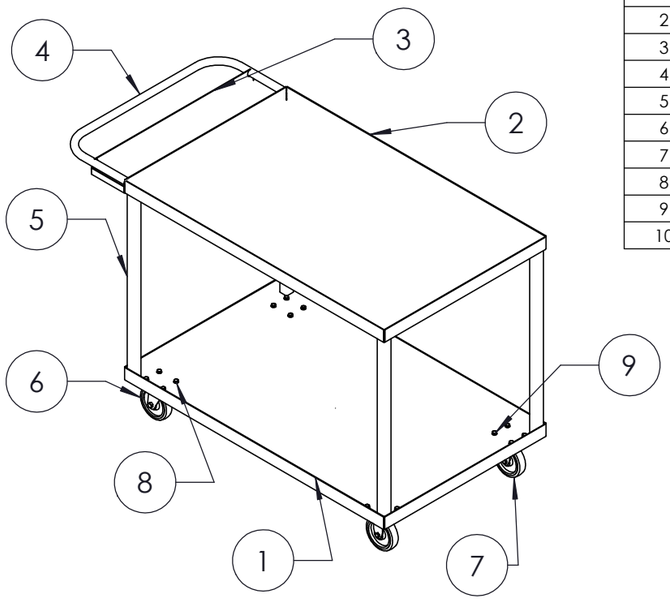

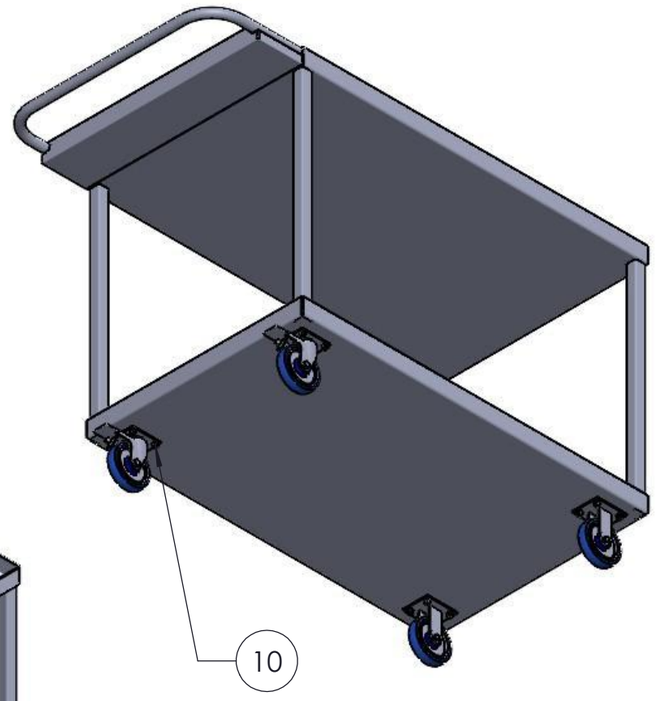

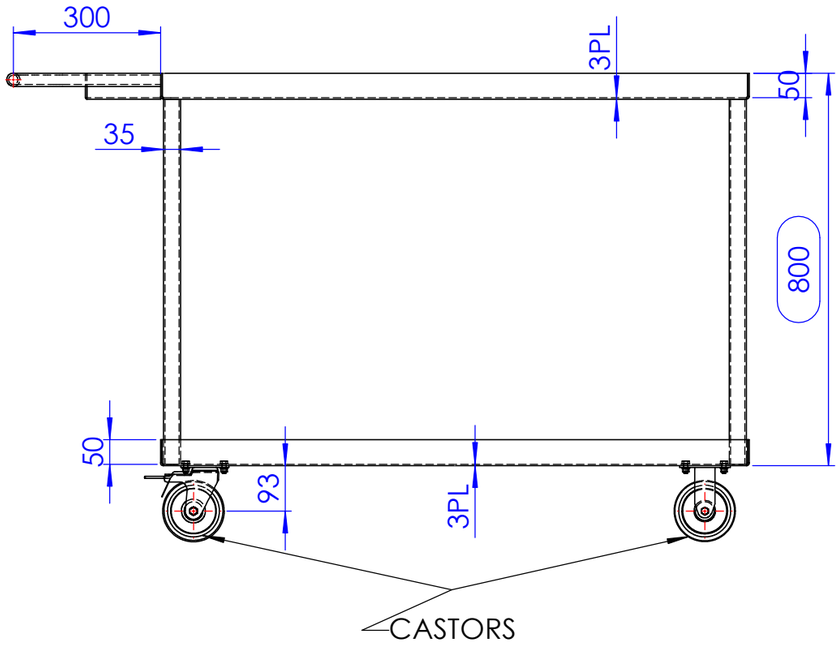

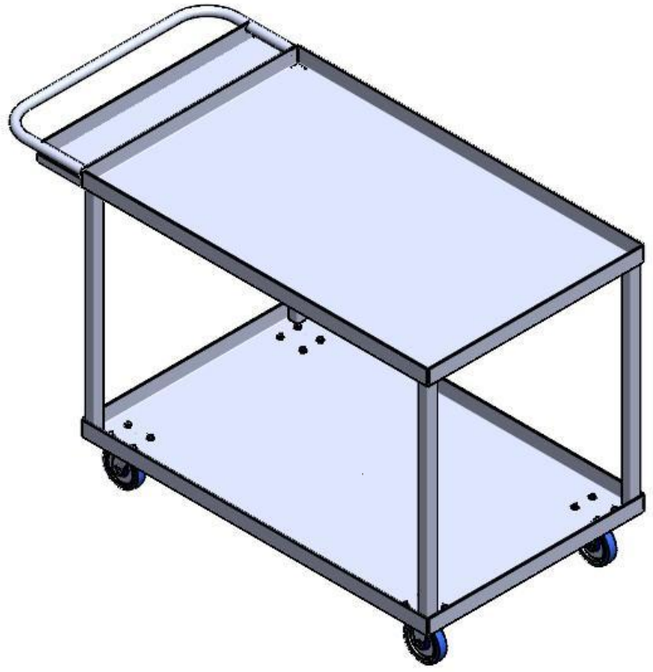

PLASMA PROGRAM:
Custom Trolley Open Type - Painted White - 3mm -

	NAME	DATE
DRAWN	DS	22/10/2025
CHK'D		
APPV'D		

UNLESS OTHERWISE SPECIFIED DIMENSIONS ARE IN MILLIMETERS. TOLERANCES: LINEAR: 0.5mm, ANGULAR: 0.5°

DRAFTING STANDARD AS1100
DEBURR AND BREAK SHARP EDGES
MASS: 78kg

TITLE: GOLDFIELDS PART TROLLEY

3RD ANGLE PROJECTION:

SCALE:1:20
DO NOT SCALE DRAWING

A3

SHEET 1 OF 4

REVISION **A**

FILE LOCATION: W:\ \TROLLEY OPEN TYPE (APPROX. H800 X D750 X L1200MM + HANDLE) - 5. SW\

EXAMPLE OF GENERAL ASSEMBLY WITH WELDMENTS APPLICATION IN SOLIDWORKS

ASSEMBLY NO.	DESCRIPTION	QTY.
LG-2	LOWER GROUND BALUSTRADE 2	1
LG-3	LOWER GROUND BALUSTRADE 3	1
LG-4	LOWER GROUND BALUSTRADE 4	1
LG-5	LOWER GROUND BALUSTRADE 5	1
LG-6	LOWER GROUND BALUSTRADE 6	1
LG-7	LOWER GROUND BALUSTRADE 7	1
LG-8	LOWER GROUND BALUSTRADE 8	1
LG-9	LOWER GROUND BALUSTRADE 9	1

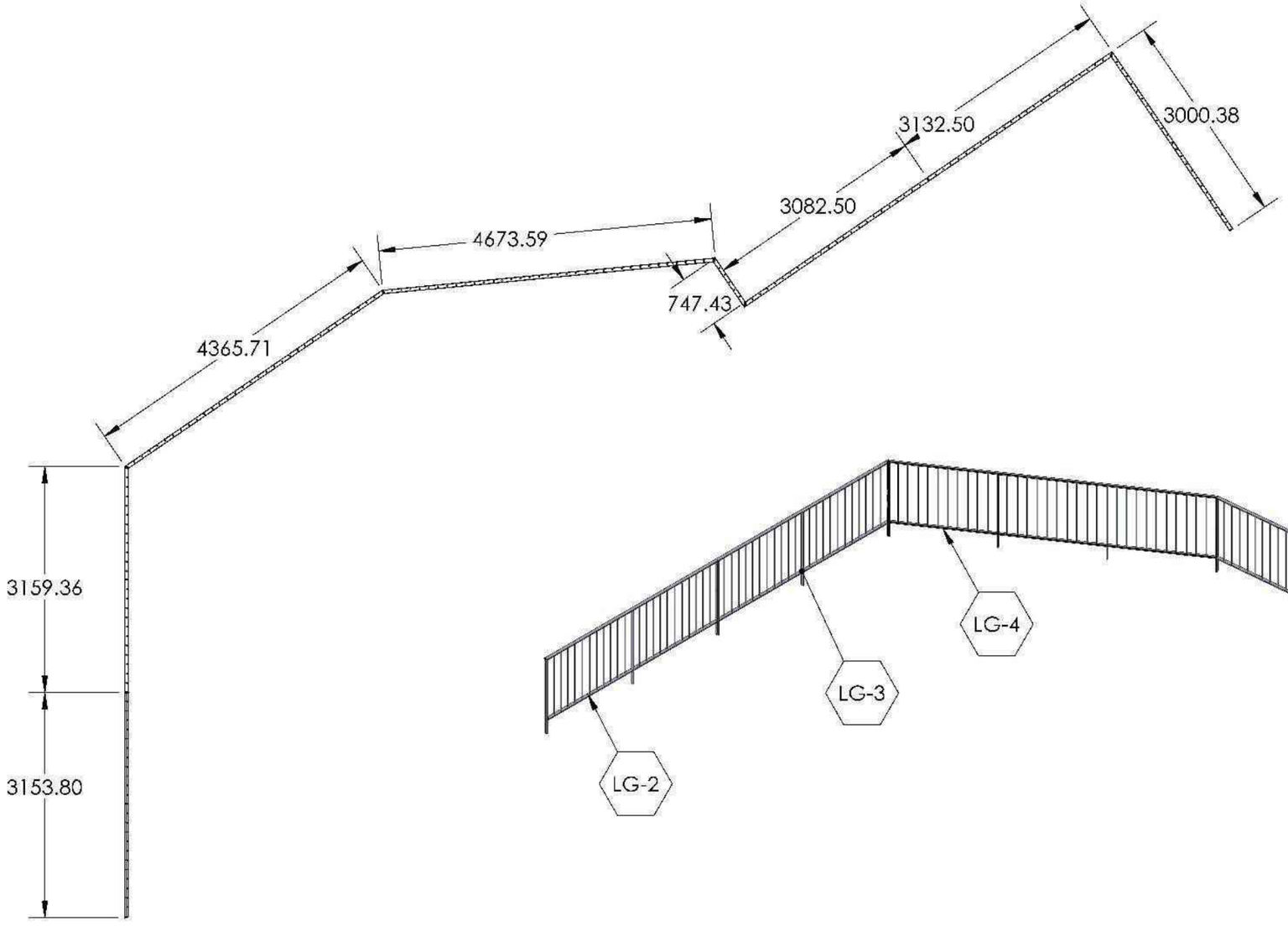

TOP VIEW
SCALE 1 : 70

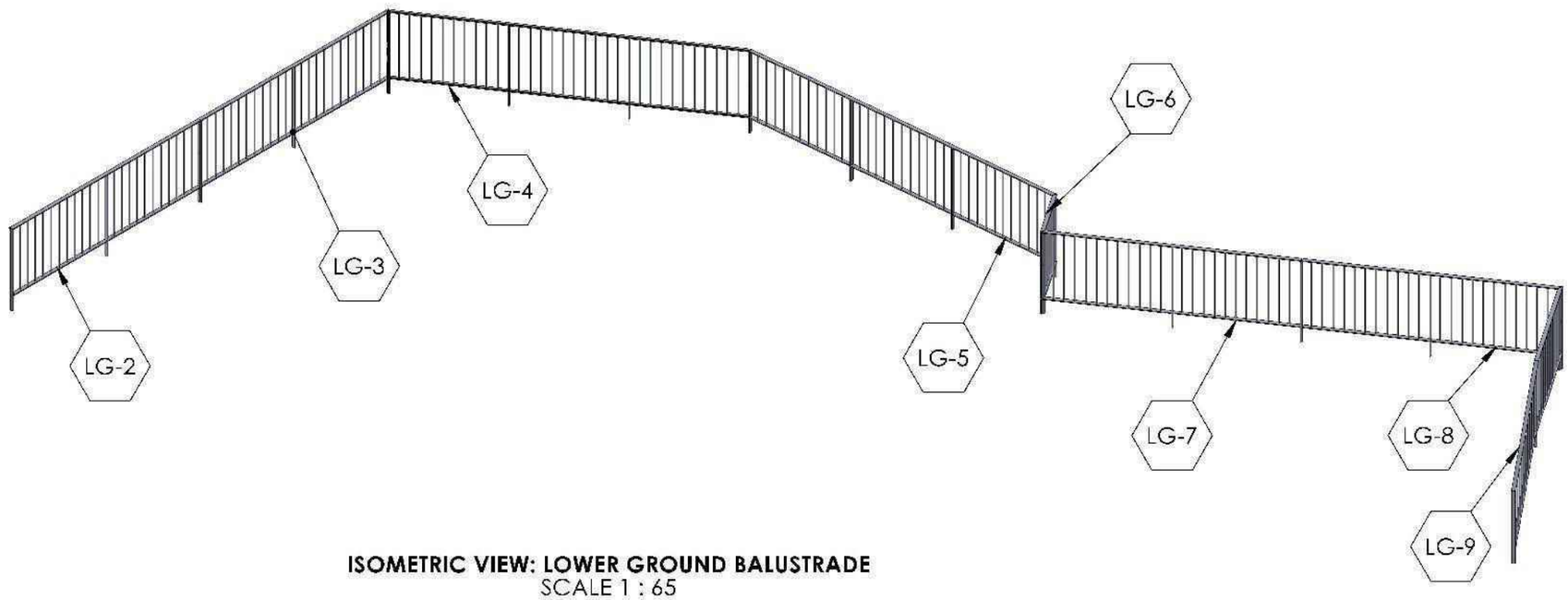

ISOMETRIC VIEW: LOWER GROUND BALUSTRADE
SCALE 1 : 65

DESCRIPTION:
GENERAL ASSEMBLY
LOWER GROUND BALUSTRADE

ITEM NUMBER:
LG-2, LG-3, LG-4, LG-5, LG-6, LG-7, LG-8, LG-9

STAGE:
ISSUED FOR MANUFACTURING APPROVAL

JOB NO:

DATE:
03/03/2025

EXAMPLE OF SUB-ASSEMBLY DRAWING INVOLVING WELDMENTS

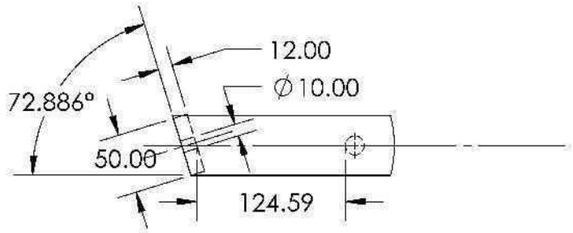

DETAIL A
SCALE 1 : 5

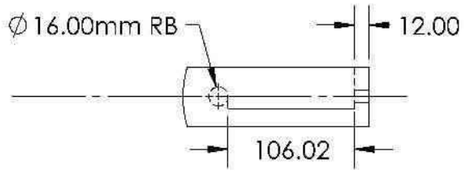

DETAIL B
SCALE 1 : 5

ITEM NO.	QTY.	DESCRIPTION	LENGTH
1	1	15 x 12mm FB (EX4032)	3153.8
2	2	15 x 12mm FB (EX4032)	1173
3	22	Ø16mm RB (EX6002)	946
4	1	15 x 12mm FB (EX4032)	1576.170332
5	1	15 x 12mm FB (EX4032)	1541
6	1	15 x 12mm FB (EX4032)	1173

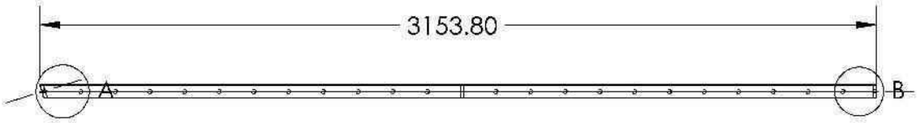

TOP VIEW
SCALE 1 : 22.5

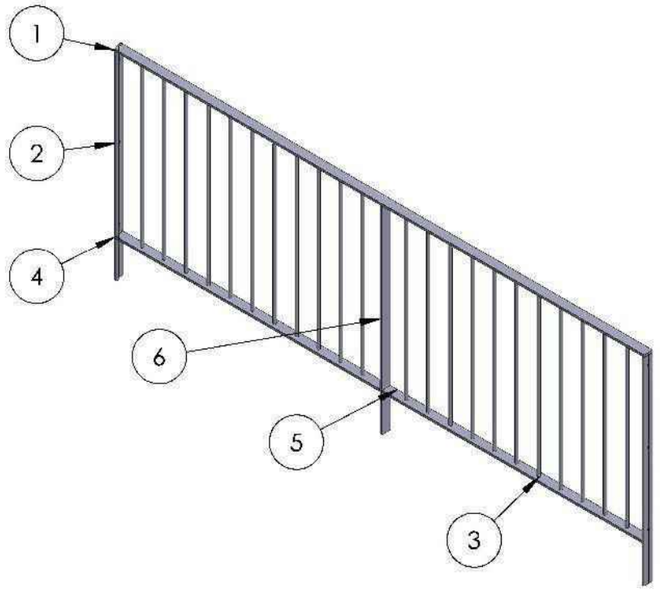

ISOMETRIC VIEW: LG-2 BALUSTRADE
SCALE 1 : 25

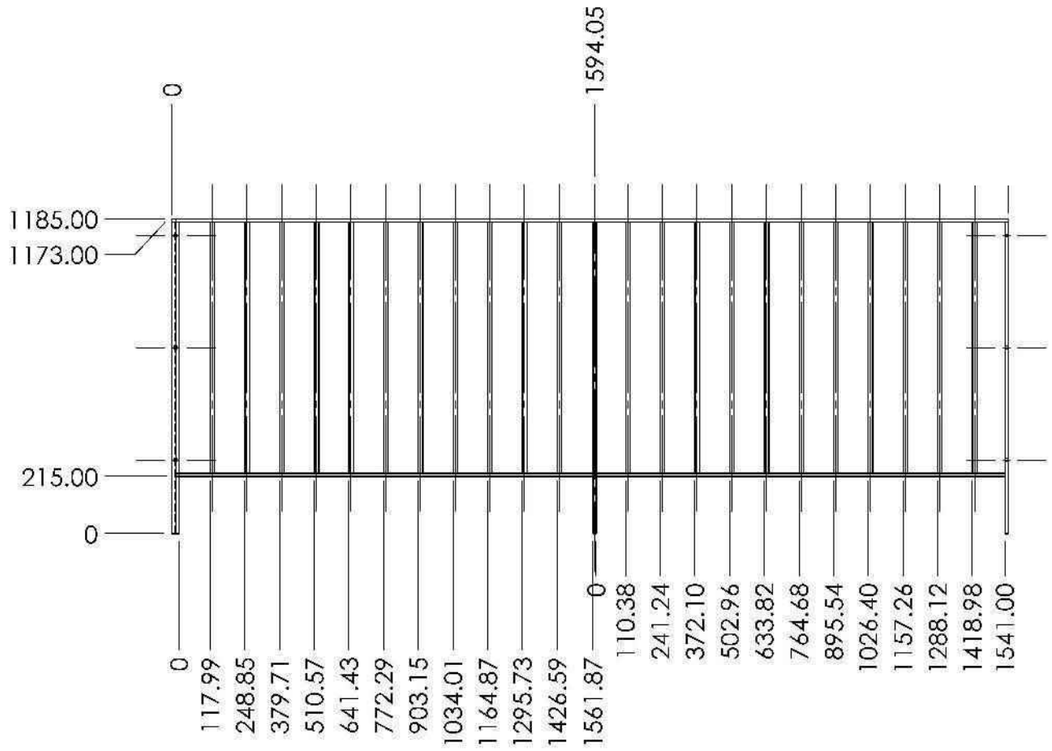

ELEVATION VIEW: LG-2 BALUSTRADE
SCALE 1 : 22.5

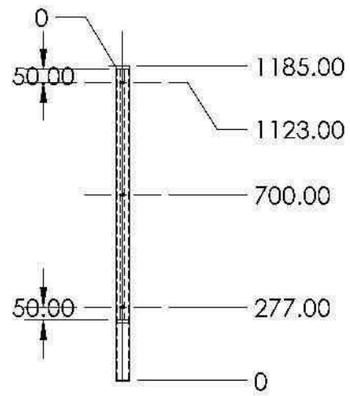

END VIEW
SCALE 1 : 22.5

DESCRIPTION: LG-2 DETAIL LOWER GROUND BALUSTRADE		
ITEM NUMBER: LG-2	STAGE: ISSUED FOR MANUFACTURING APPROVAL	
JOB NO: 03/03/2025	DATE: 03/03/2025	WEBSITE:

AUTOCAD

3D MODELING AND TECHNICAL DRAWINGS

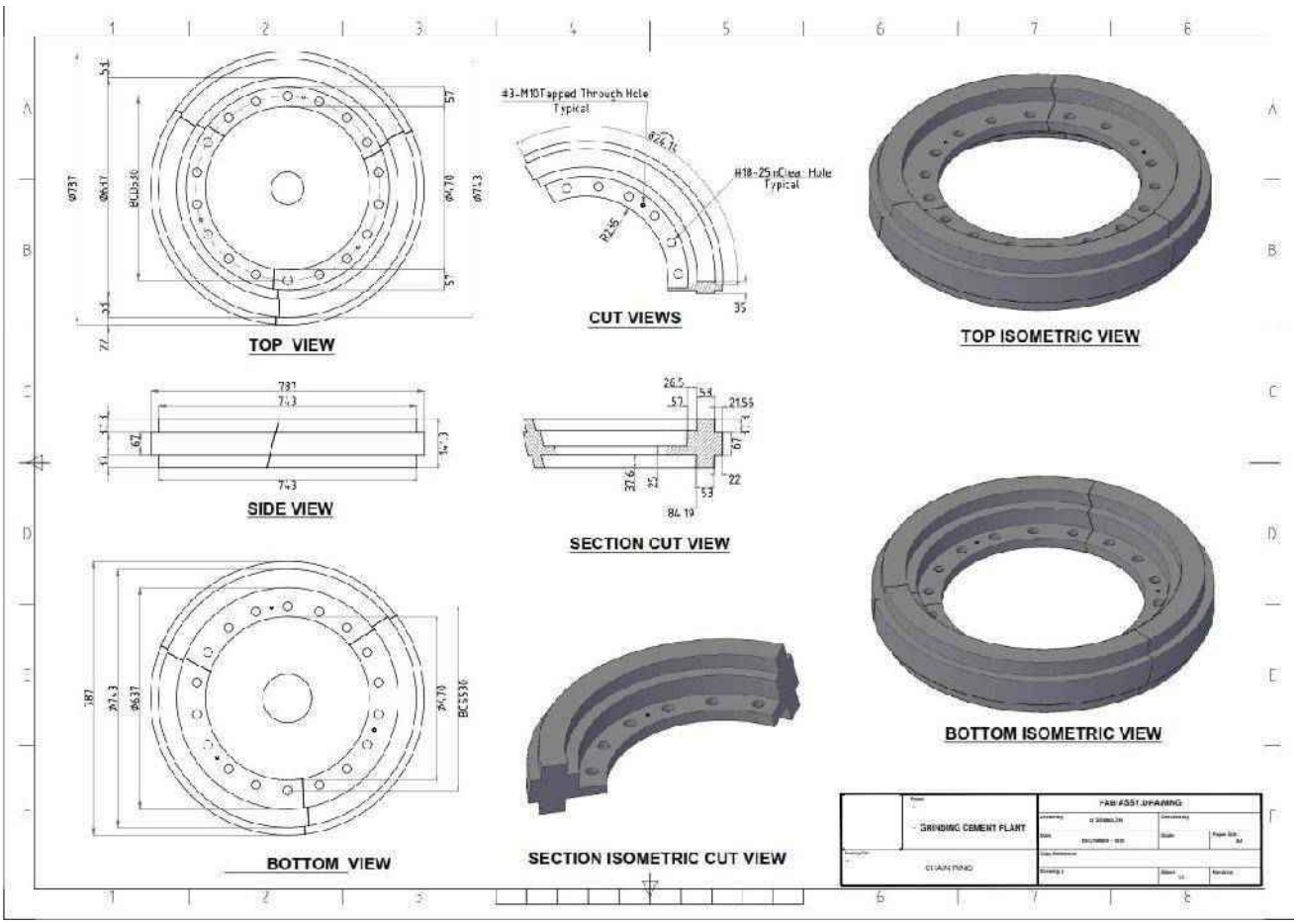
TOP VIEW
CUT VIEWS
TOP ISOMETRIC VIEW
SIDE VIEW
SECTION CUT VIEW
BOTTOM ISOMETRIC VIEW
BOTTOM VIEW
SECTION ISOMETRIC CUT VIEW
GRINDING CEMENT PLANT

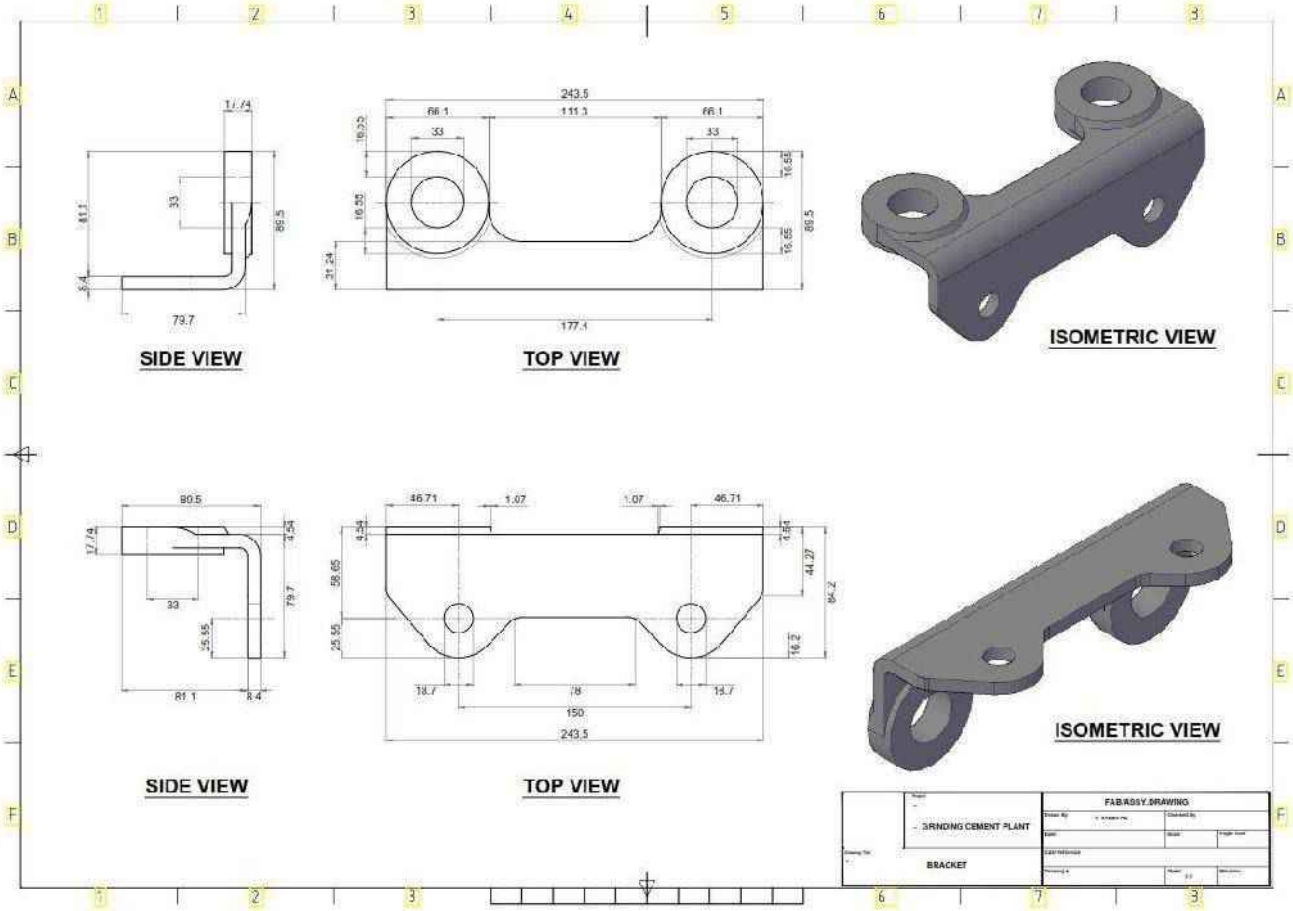
SIDE VIEW
TOP VIEW
ISOMETRIC VIEW
SIDE VIEW
TOP VIEW
ISOMETRIC VIEW
FAB/ASSY.DRAWING
GRINDING CEMENT PLANT
BRACKET

AU04 FL02

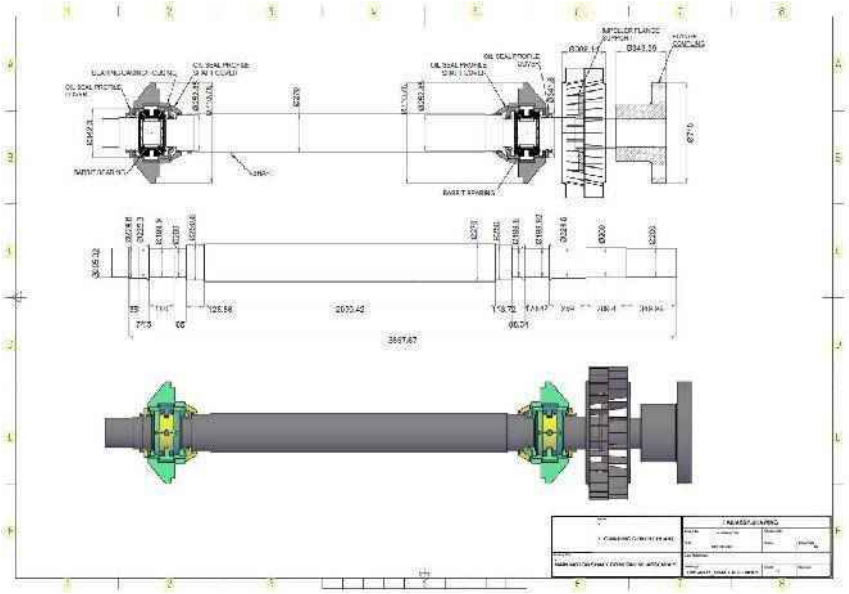

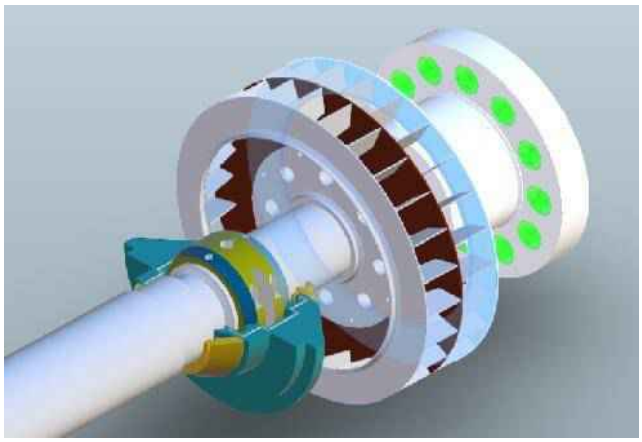

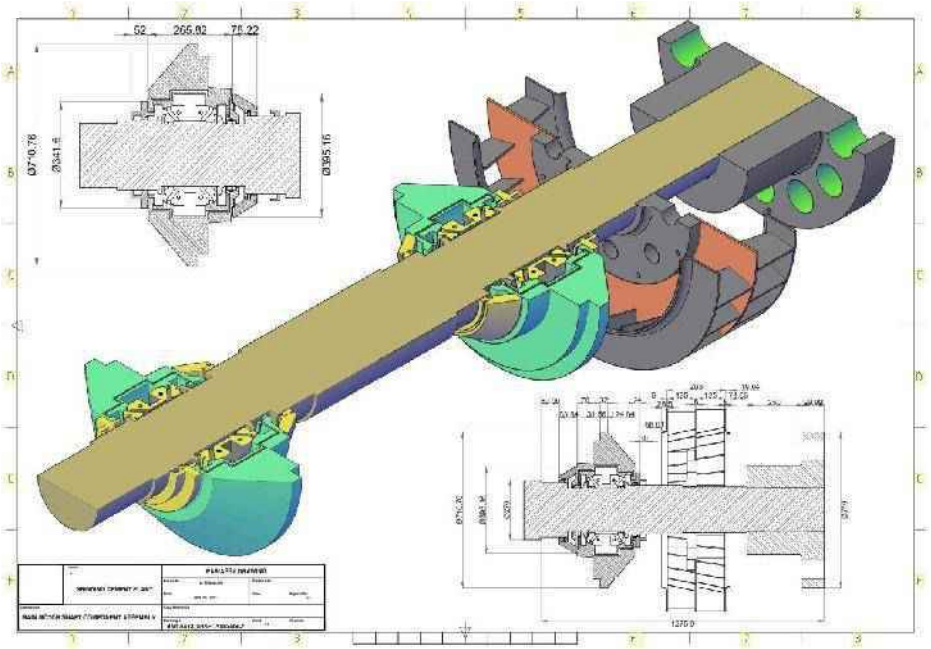

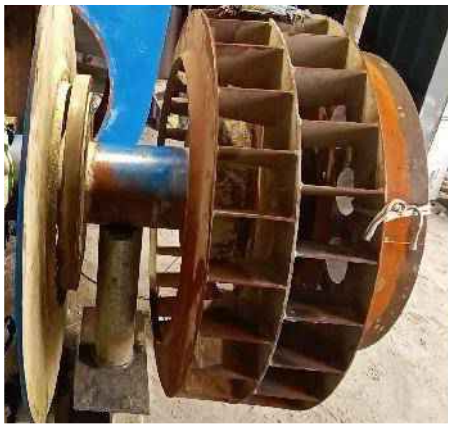

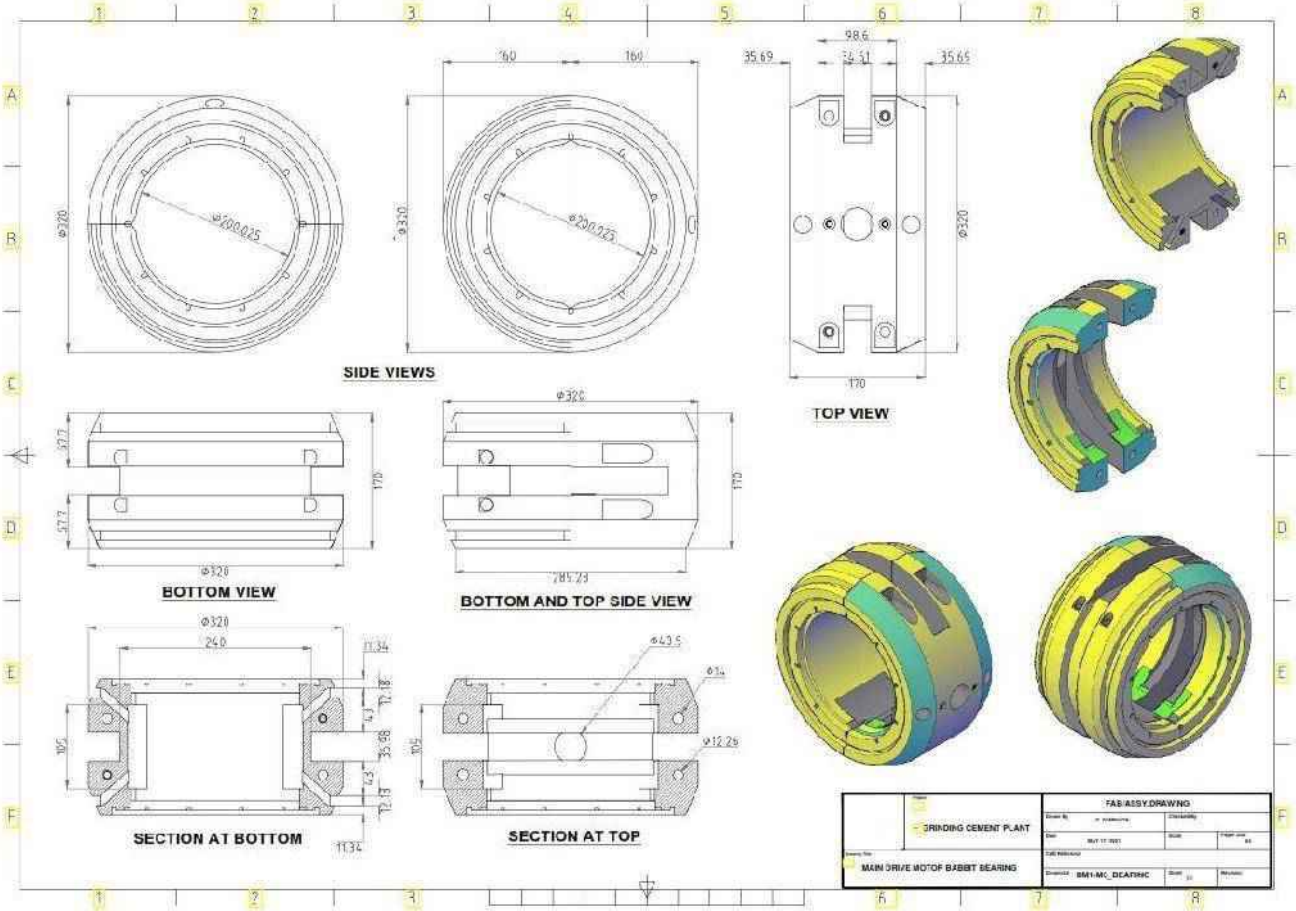
SIDE VIEWS
TOP VIEW
BOTTOM VIEW
BOTTOM AND TOP SIDE VIEW
SECTION AT BOTTOM
SECTION AT TOP
FAB/ASSY.DRAWING
GRINDING CEMENT PLANT
MAIN DRIVE MOTOF BABBIT BEARING

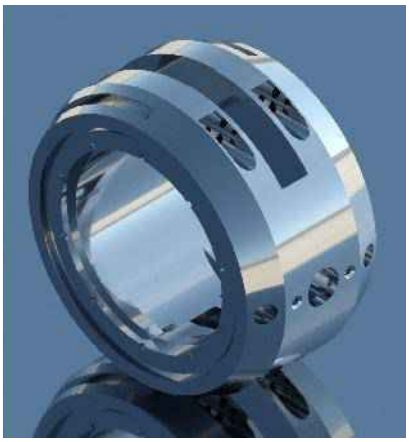

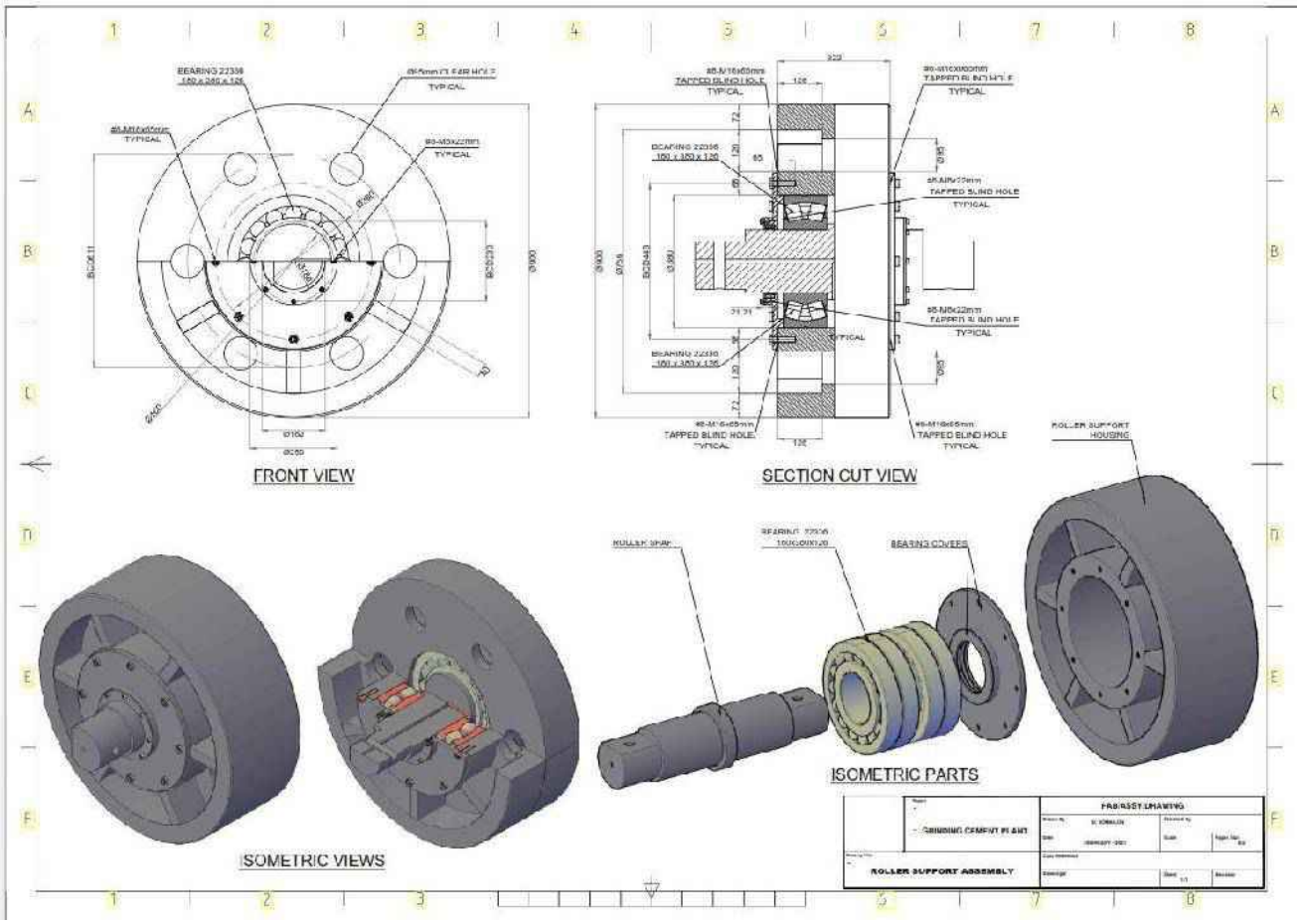
FRONT VIEW
SECTION CUT VIEW
ISOMETRIC PARTS
SOMETRIC VIEWS
ROLLER SUPPORT HOUSING
BEARING COVERS
ROLLER SUPPORT ASSEMBLY

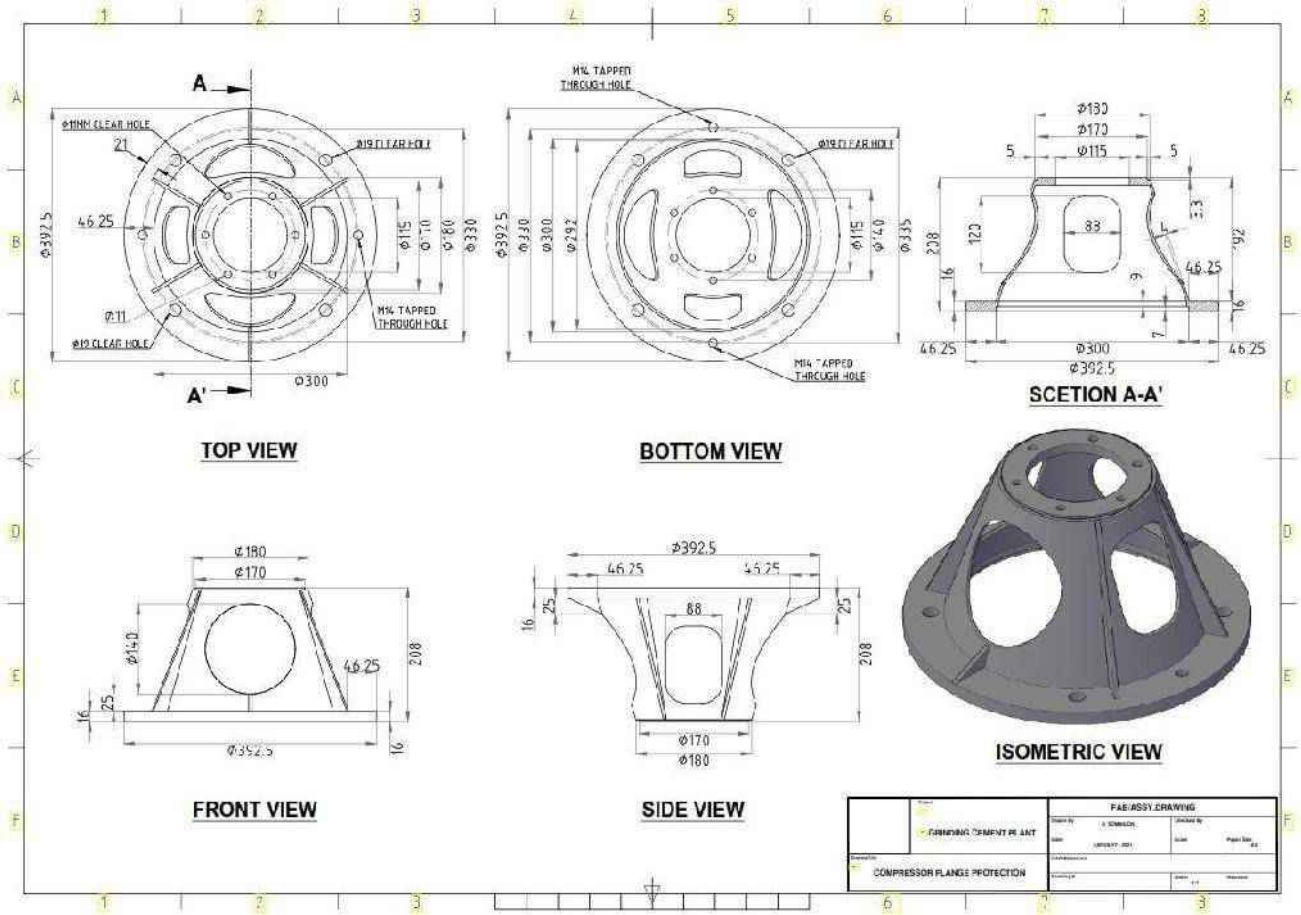
TOP VIEW
BOTTOM VIEW
SCETION A-A'
FRONT VIEW
SIDE VIEW
ISOMETRIC VIEW
M14 TAPPED THROUGH HOLE
Ø19 CLEAR HOLE
Ø11
Ø300
Ø392.5
46.25
88
208
16
25
Ø170
Ø180
Ø140
Ø115
Ø330
Ø292
Ø130
Ø135
FAB/ASSY.DRAWING
COMPRESSOR FLANGE PROTECTION

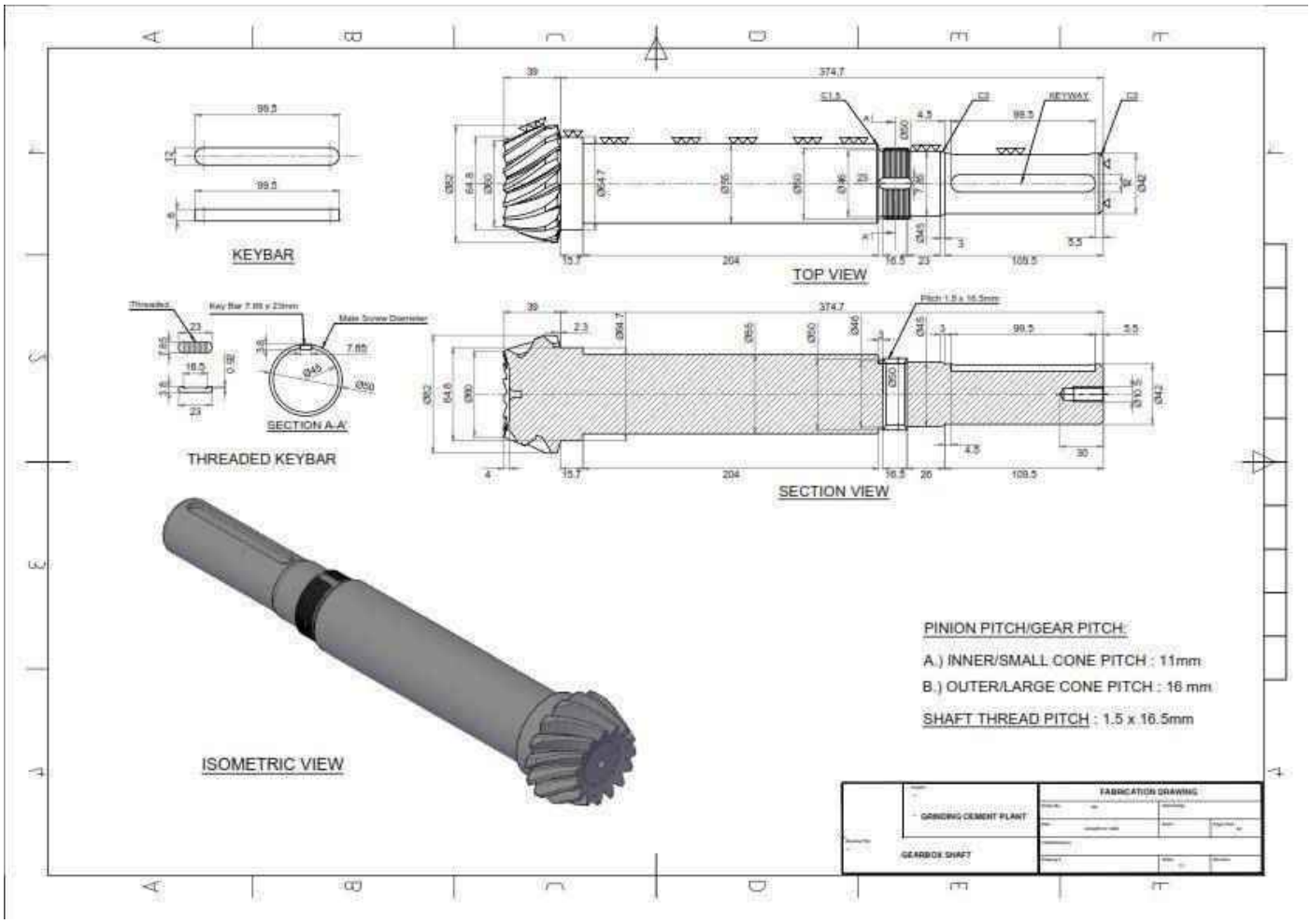
KEYBAR
TOP VIEW
THREADED KEYBAR
SECTION A-A'
SECTION VIEW
ISOMETRIC VIEW
PINION PITCH/GEAR PITCH:
A.) INNER/SMALL CONE PITCH : 11mm
B.) OUTER/LARGE CONE PITCH : 16 mm
SHAFT THREAD PITCH : 1.5 x 16.5mm
GRINDING CEMENT PLANT
GEARBOX SHAFT
FABRICATION DRAWING

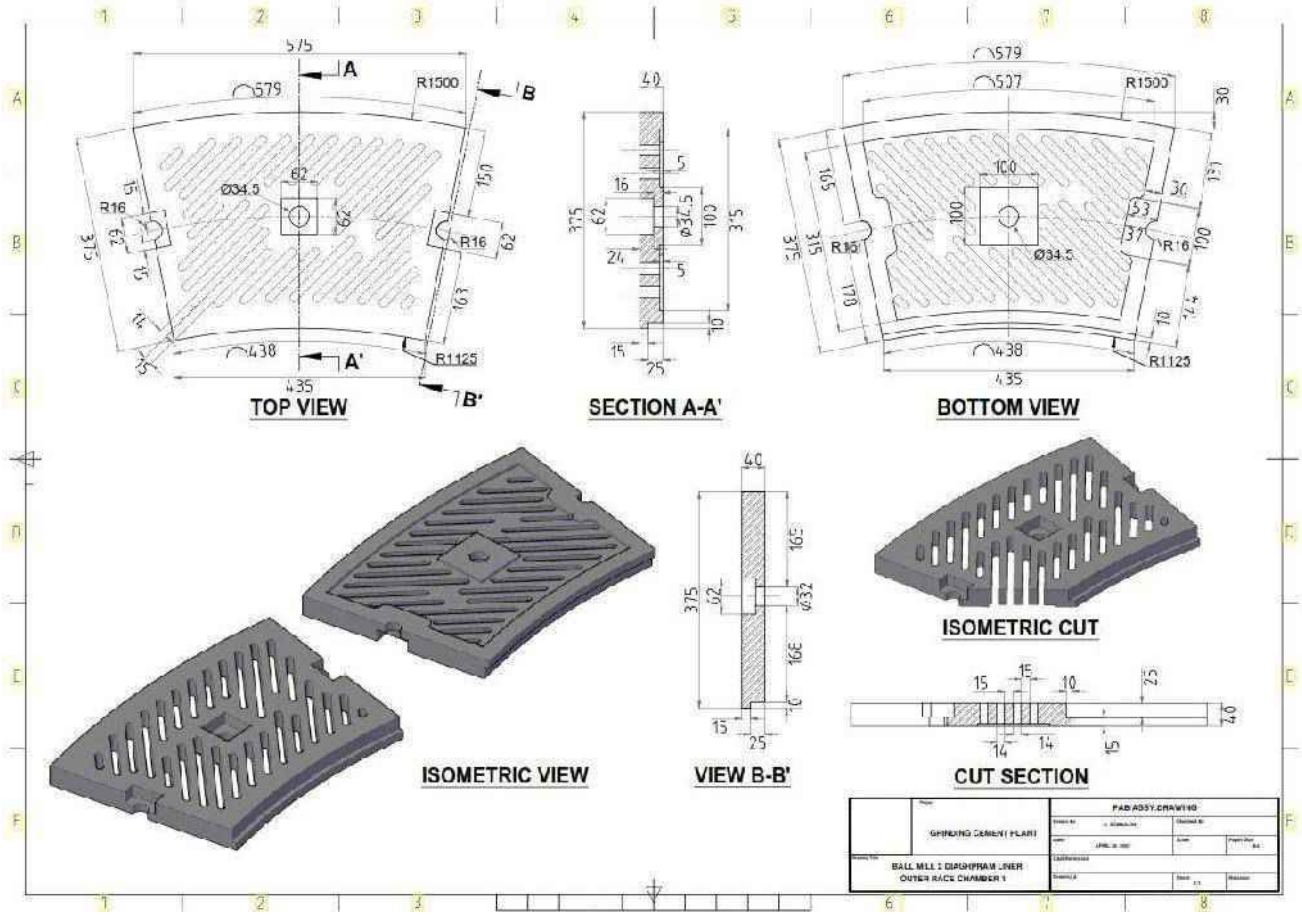
TOP VIEW
SECTION A-A'
BOTTOM VIEW
ISOMETRIC VIEW
VIEW B-B'
ISOMETRIC CUT
CUT SECTION
R1500
R1125
Ø34.5
Ø37.5
Ø32
575
579
527
438
435
GRINDING CEMENT PLANT
BALL MILL 1 DIAPHRAM LINER
OUTER RACE CHAMBER 1
PAD ASSY.DRAWING

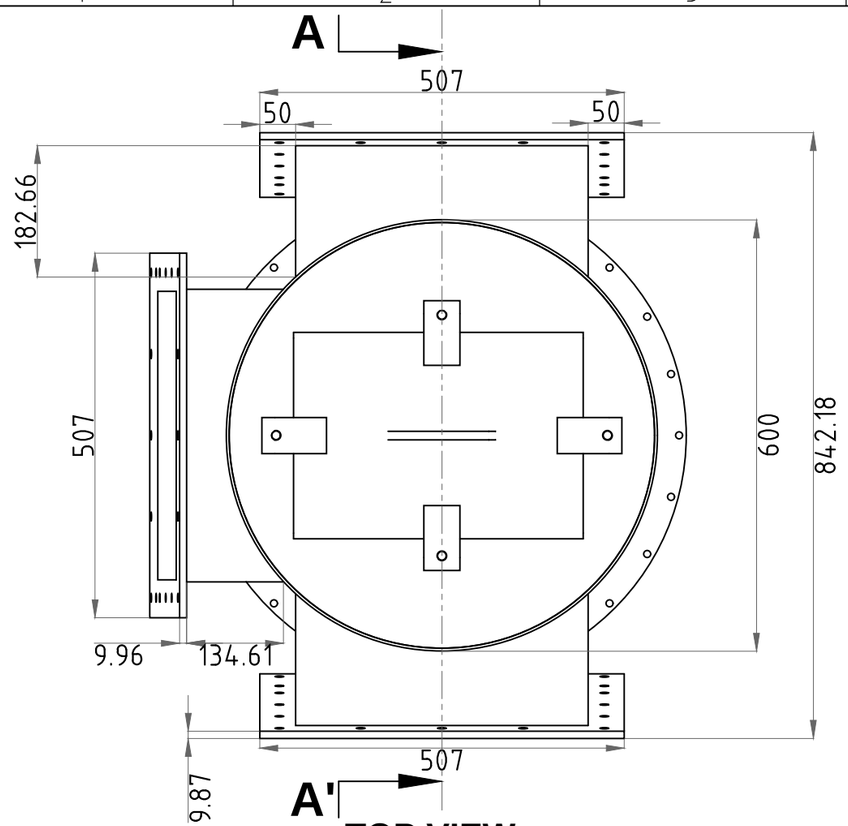

TOP VIEW

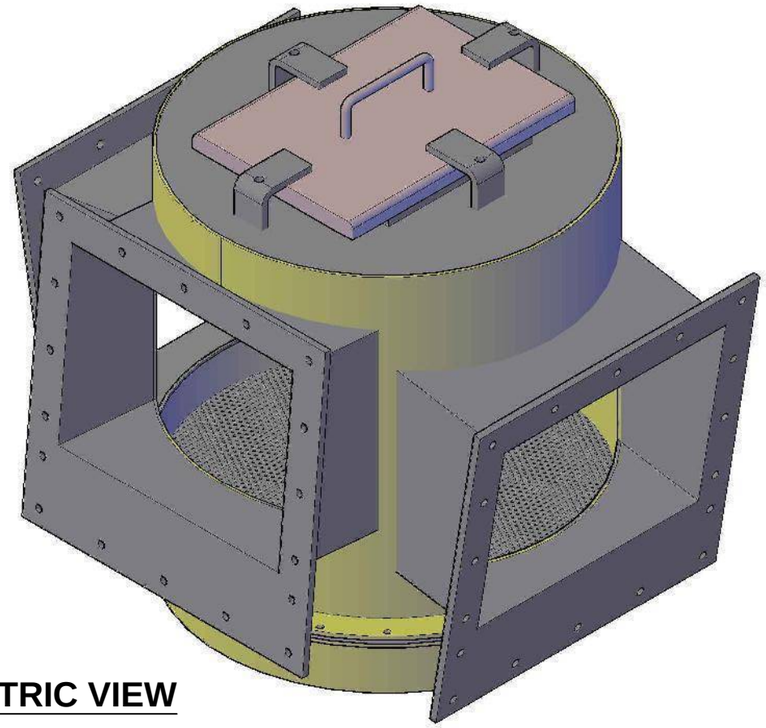

ISOMETRIC VIEW

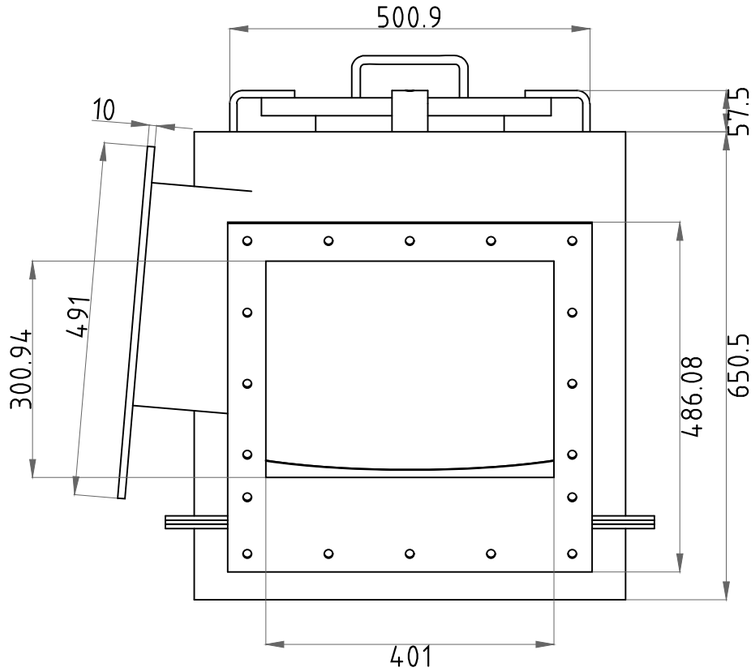

FRONT VIEW

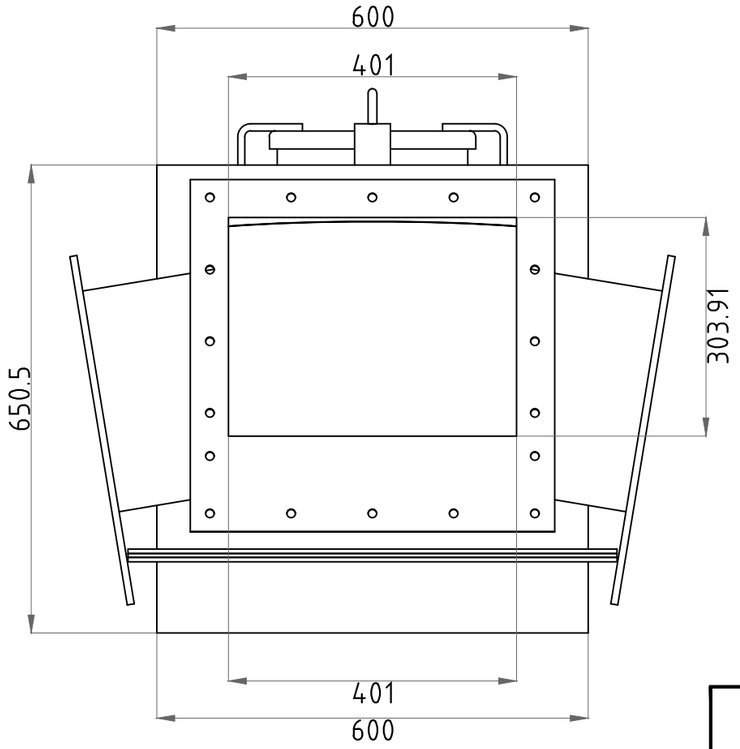

SIDE VIEW

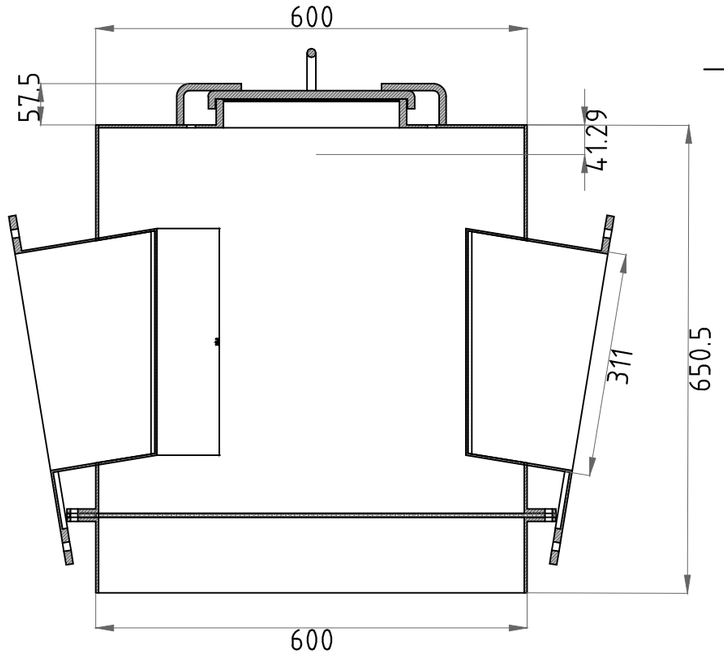

SECTION A-A'

Project – GRINDING CEMENT PLANT	FAB/ASSY.DRAWING		
	Drawn By D. SOMBILON	Checked By	
	Date DECEMBER - 2020	Scale	Paper Size A4
Drawing Title – AIRSLIDE DIVETER CONNECTOR ASSEMBLY	CAD Reference		
	Drawing #	Sheet 1/1	Revision

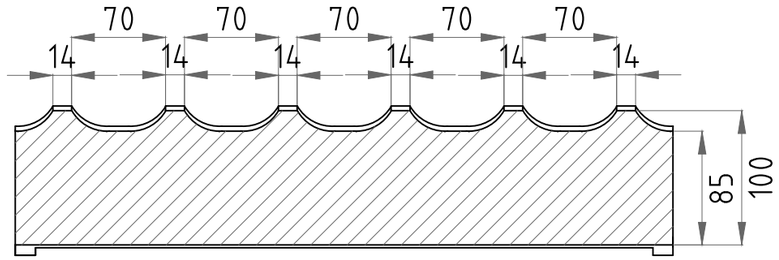

BACK VIEW

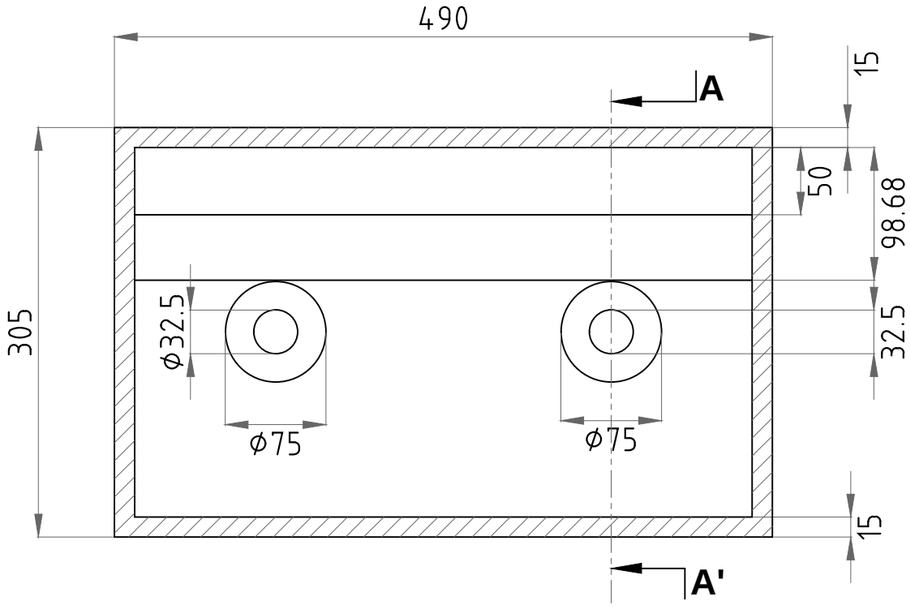

BOTTOM VIEW

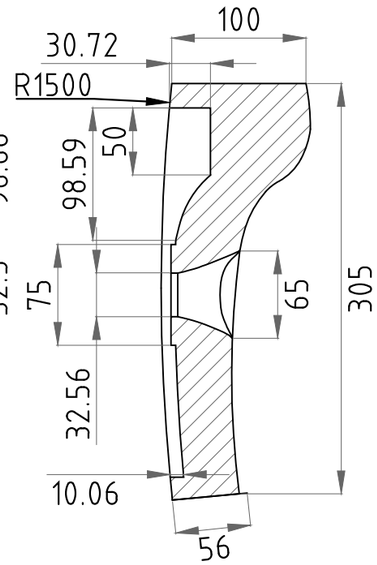

SECTION A-A'

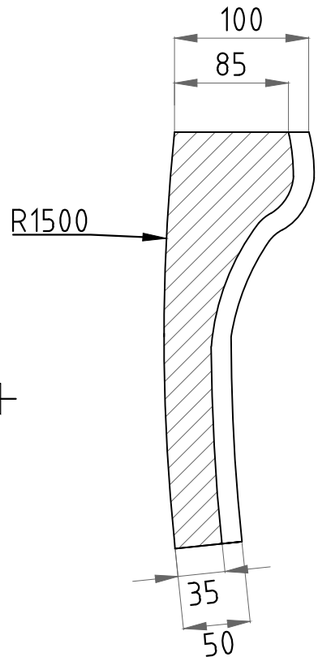

SIDE VIEW

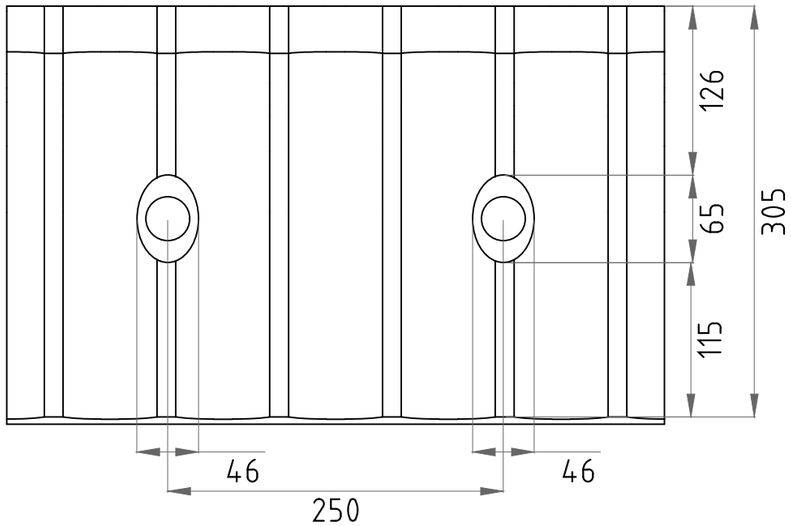

TOP VIEW

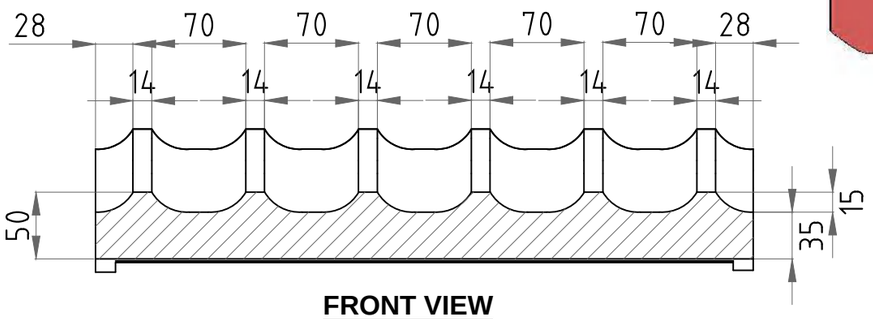

FRONT VIEW

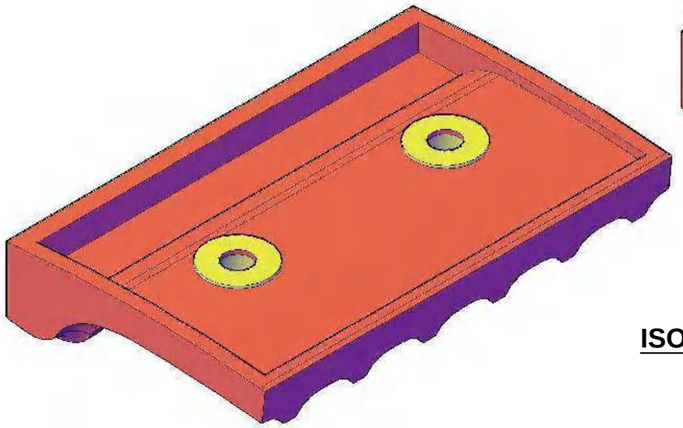

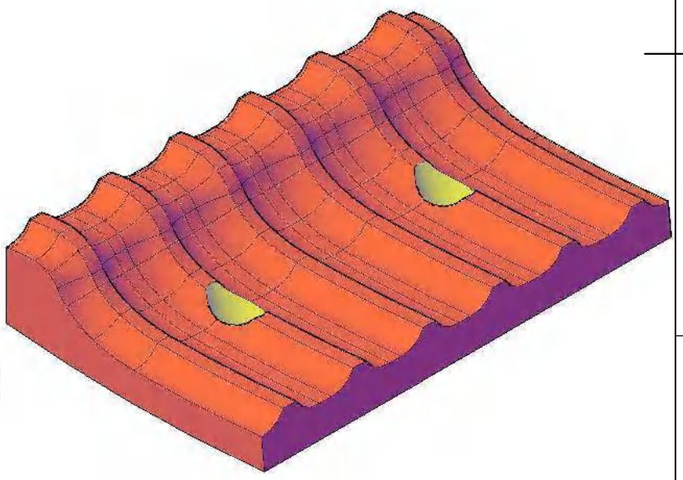

ISOMETRIC VIEW

Project – GRINDING CEMENT PLANT	FAB/ASSY.DRAWING		
	Drawn By D. SOMBILON	Checked By	
	Date JANUARY - 2021	Scale	Paper Size A4
Drawing Title – MILL 2 LINER 305 X 490 MM	CAD Reference		
	Drawing #	Sheet 1/1	Revision

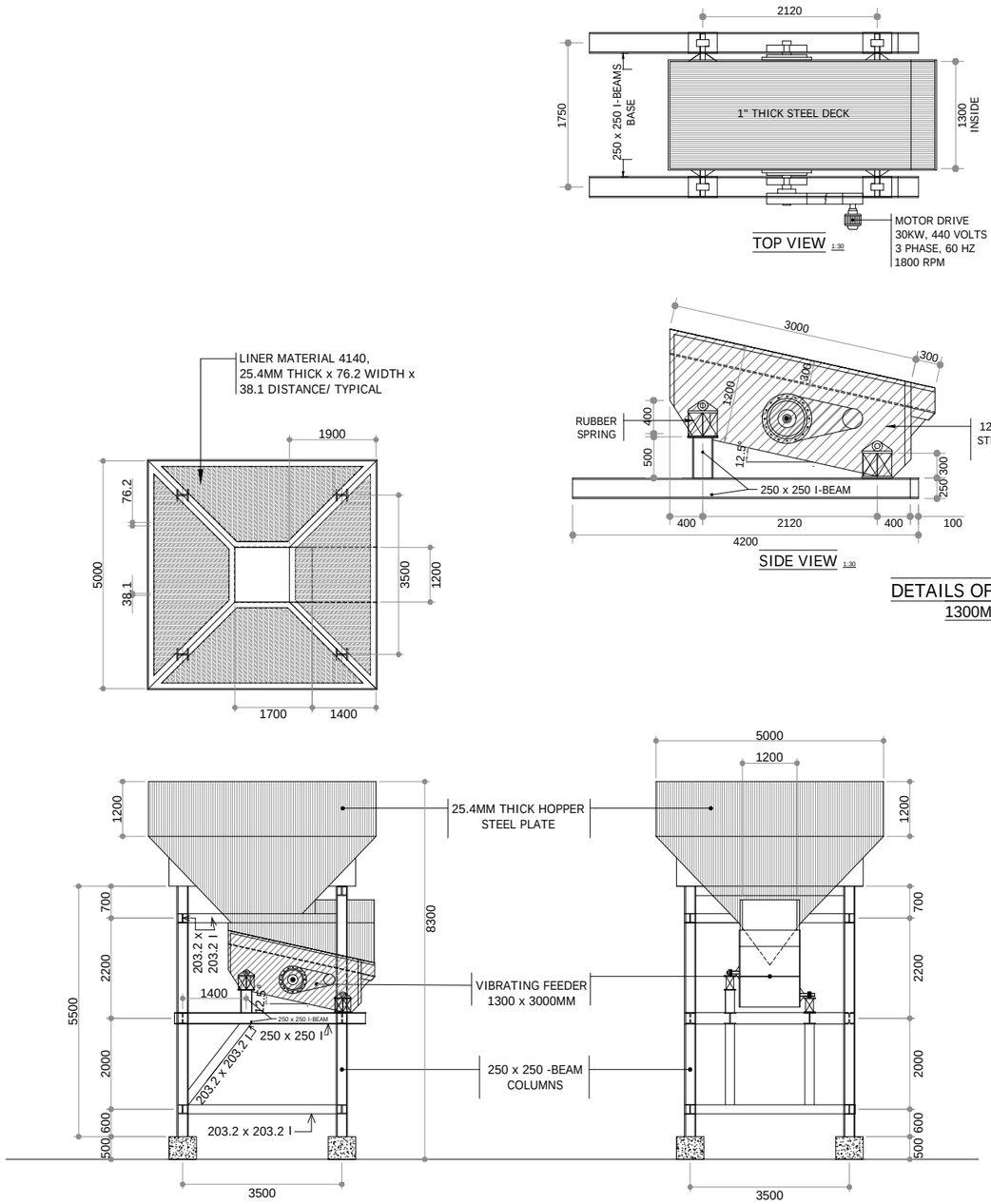

DETAILS OF VIBRATING FEEDER 1:30
1300MM X 3000MM LONG

SET-UP OF VIBRATING FEEDER 1:100

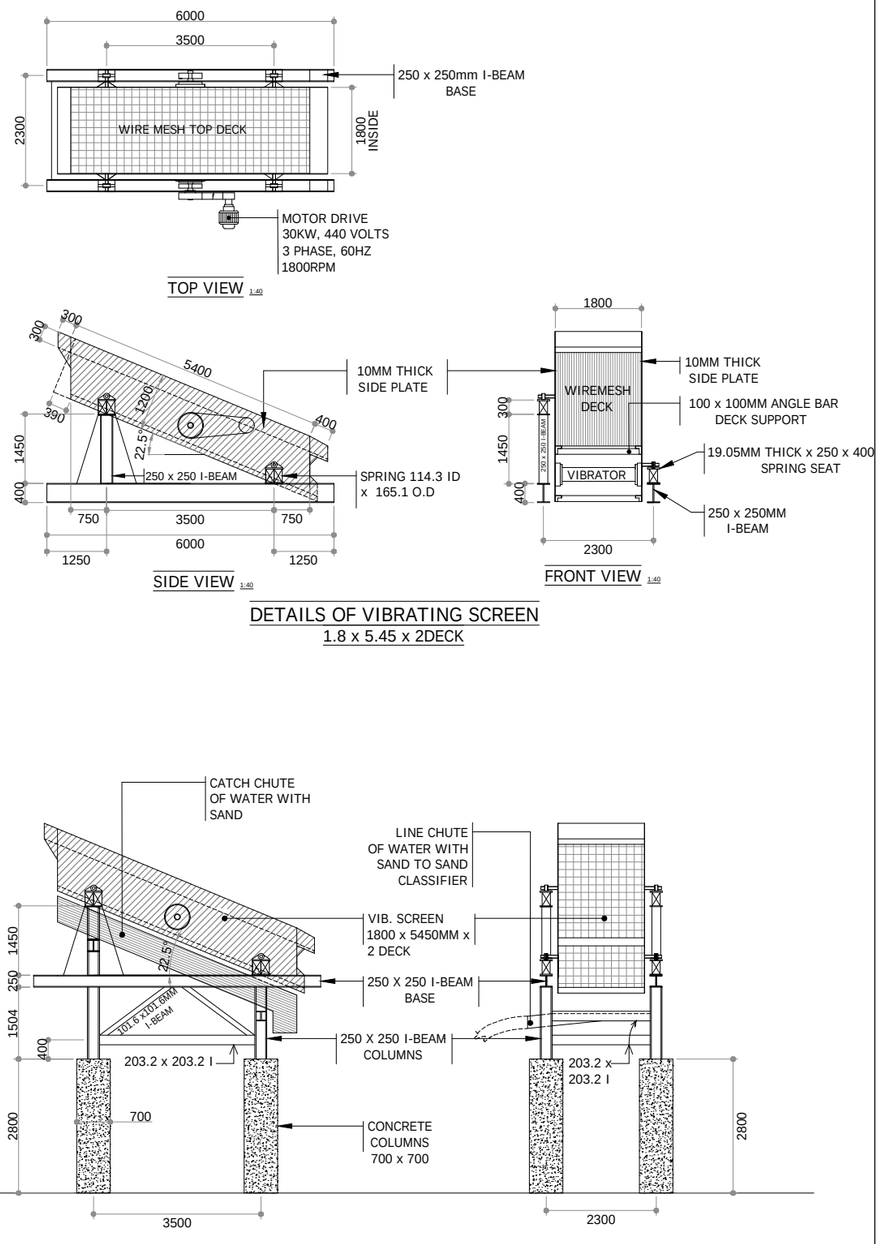

DETAILS OF VIBRATING SCREEN
1.8 x 5.45 x 2DECK

SET-UP OF VIBRATING SCREEN 1:100

ENGINEER:	OWNER:	PROJECT TITLE:	SHEET CONTENTS:	SHEET NO.
	By: _____	ROCK CRUSHING PLANT LOCATION	VIBRATING FEEDER AND VIBRATING SCREEN DETAILS AND SETUP END DATE: CHECKED BY:	A-1

SOLIDWORKS
SOLID MODELLING
SAMPLE PORTFOLIO

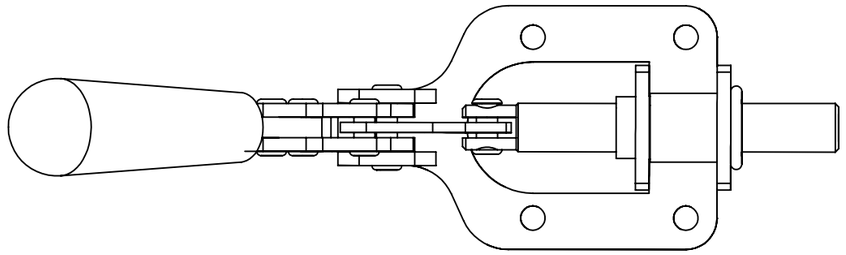

(1 : 1.4)

TOP VIEW

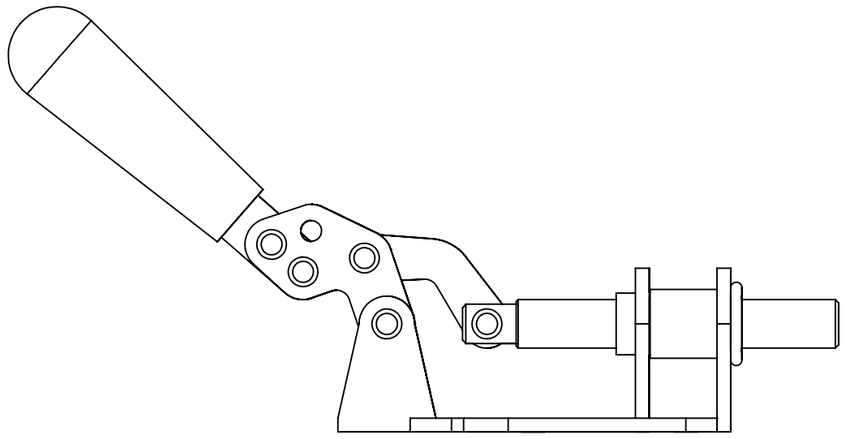

(1 : 1.4)

LEFT VIEW

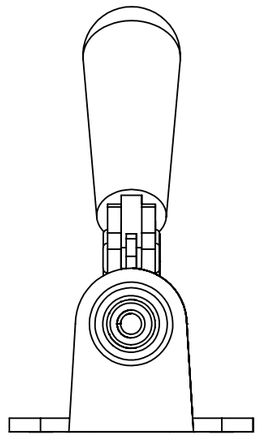

(1 : 1.4)

FRONT VIEW

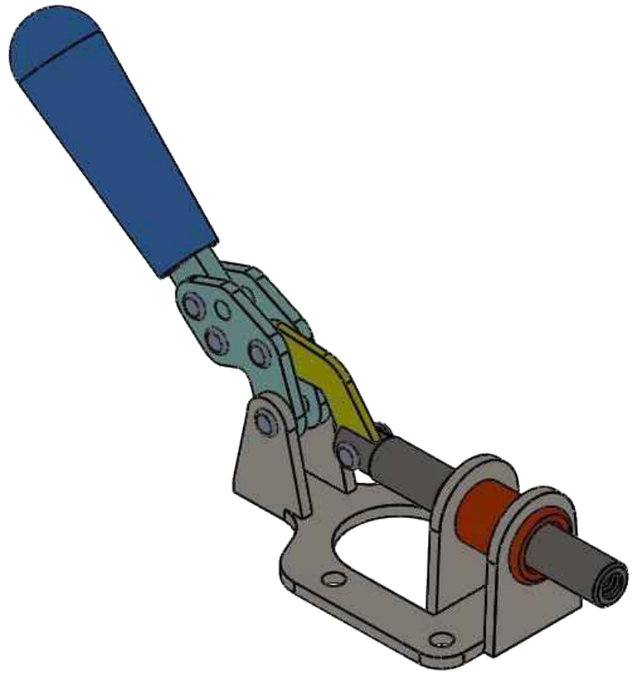

(1 : 1.4)

ISOMETRIC

UNLESS OTHERWISE SPECIFIED: DIMENSIONS ARE IN MILLIMETERS SURFACE FINISH: TOLERANCES: LINEAR: ANGULAR:	FINISH:			DEBURR AND BREAK SHARP EDGES	DO NOT SCALE DRAWING	REVISION
	NAME	SIGNATURE	DATE		TITLE: TOGGLE CLAMP ASSEMBLY	
DRAWN	DAREN					
CHK'D						
APPV'D						
MFG						
Q.A				MATERIAL:	DWG NO. GUE-TCA-00	A3
				WEIGHT:	SCALE:1:2	SHEET 1 OF 2

TOGGLE CLAMP ASSEMBLY RENDERING

3D Rendering Samples from AutoCAD

Onshape 3D Model Rendering Sample

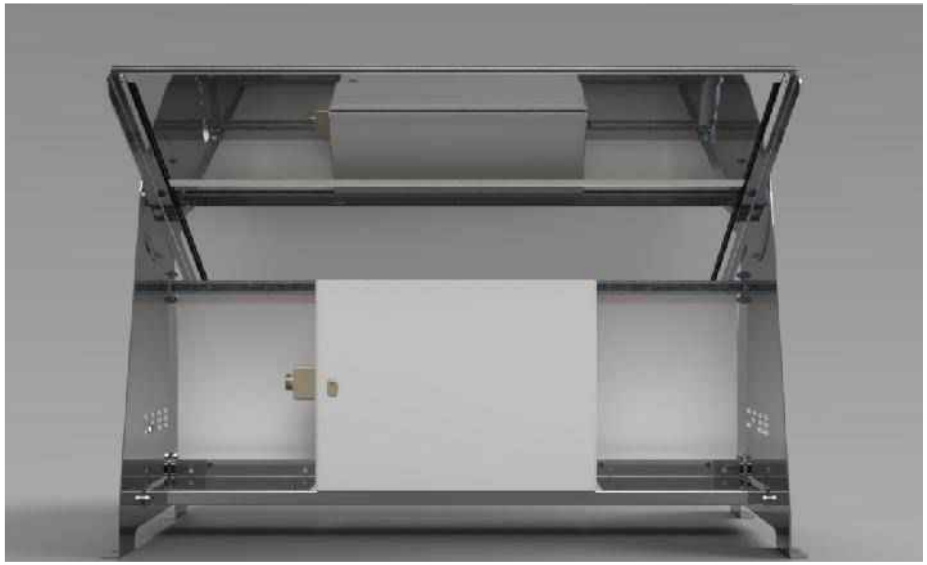

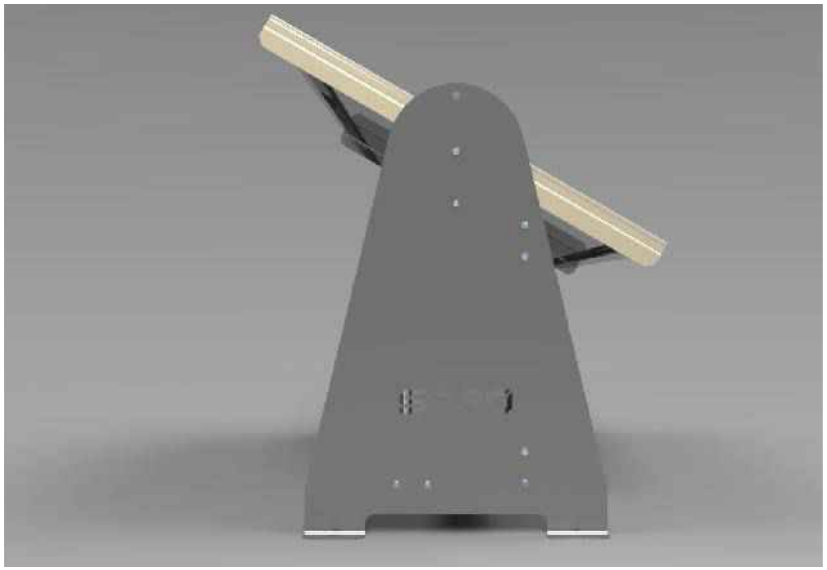

FABRICATED BY	DATE
FABRICATION CHECK BY	DATE
WELD CHECK BY	DATE

REV	DATE	DESCRIPTION	DRN	CHK
A	07/10/2024	ISSUE FOR APPROVAL	DS	

3D RENDERING

GENERAL NOTE

ALL STEELWORK TO BE FABRICATED & ERECTED TO AS4100
ALL WELDS TO BE 6MM C.F.W- U.N.O.
ALL WELDING TO AS1554
ALL CLEATS TO BE ON CENTERLINE U.N.O
HARDSTAMP ASSEMBLY MARK WHERE INDICATED THUS
ALL SNIPES ARE 15x45°

DRAWING TITLE			
CONTRACT			
MODELLED BY		CHECKED BY	
SHEET NO.	1 OF 1	DRAWING NO.	REVISION
SCALE.	1:10	-	A

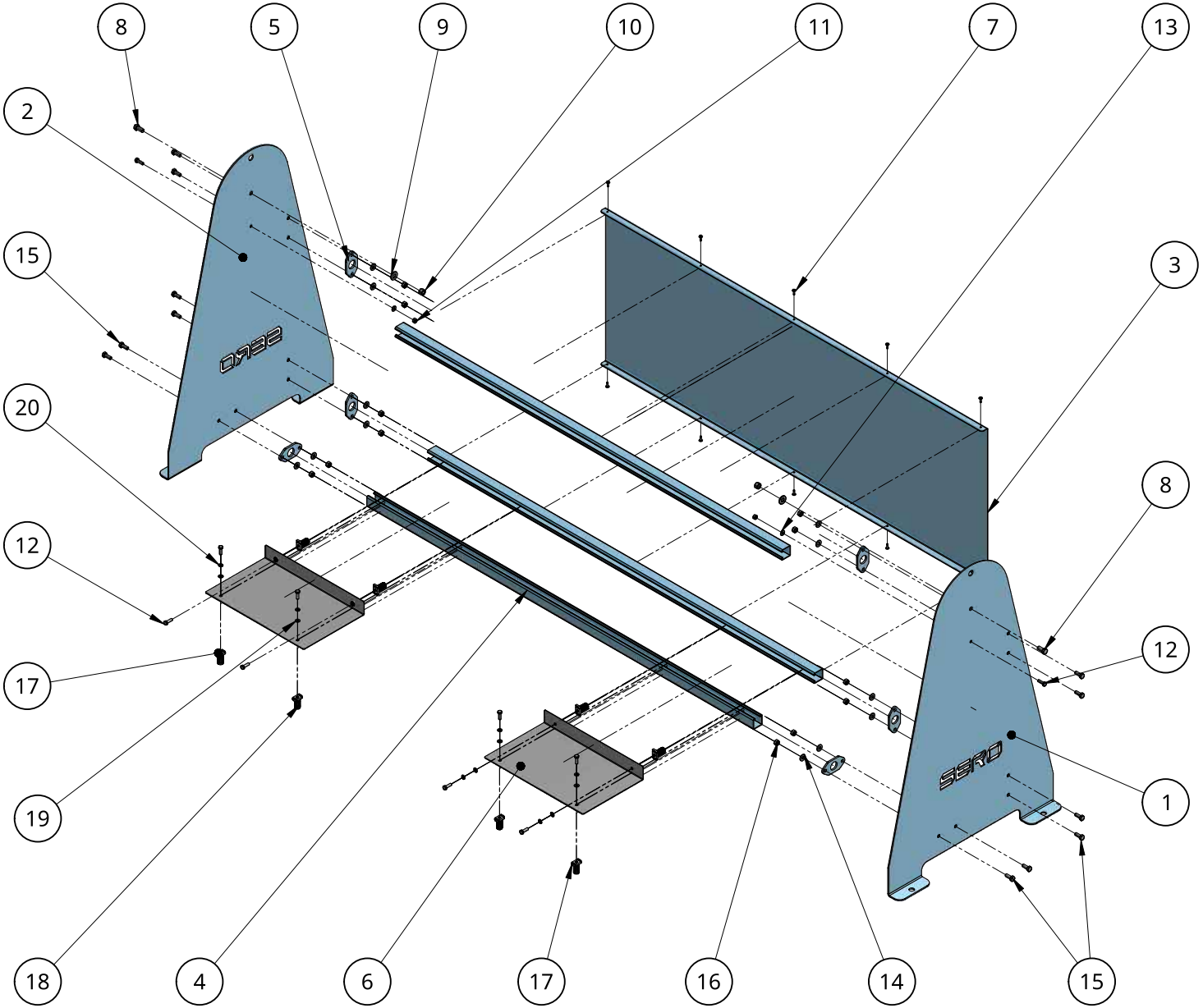

ITEM	QTY	PART NUMBER	DESCRIPTION	DIMENSION
1	1	Z-PRT-RSC1A-00	Right Side Sero Cover	1165 x 750 x 4mmx GR250
2	1	Z-PRT-LSC1A-00	Left Side Sero Cover	1165 x 750 x 4mmx GR250
3	1	Z-PRT-BCP1A-00	Back Cover Plate	1740 x 655 x 2mm PL
4	3	Z-PRT-UNS1A-00	P100T Unistrut	1758 x 41.28
5	6	Z-PRT-CNP1A-00	Connecting Plate	100 x 49 x 6mm GR250
6	2	Z-PRT-MUT1A-00	Mounting Trays	324.5 x 450 x PGI
7	10	Z-ACC-SDS1A-00	Self Drilling Screw	ST4.8 x 16mm Galvanised
8	2	Z-ACC-HEX12A-00	Hex Head Screw	M12 x 25 Galvanised Steel
9	3	Z-ACC-WSH12A-00	Washer	M12 x 25 Galvanised Steel
10	2	Z-PRT-NUT12A-00	Nylock Nut	M12 x 25 Galvanised Steel
11	2	Z-PRT-NUT8A-00	Nylock Nut	M8x 20 Galvanised Steel
12	10	Z-ACC-HEX8A-00	Hex Head Screw	M8x 20 Galvanised Steel
13	2	Z-ACC-WSH8A-00	Washer	M8x 20 Galvanised Steel
14	12	Z-ACC-WSH10A-00	Washer	M10x 25 Galvanised Steel
15	12	Z-ACC-HEX10A-00	Hex Head Screw	M10x 20 Galvanised Steel
16	12	Z-ACC-NUT10A-00	Nylock Nut	M10x 20 Galvanised Steel
17	8	Z-ACC-SPN8A-00	Spring Nut	M8x 25 Galvanised Steel
18	8	Z-ACC-SPR8A-00	Spring	M8x 25 Galvanised Steel
19	8	Z-ACC-FLW8A-00	Flat Washer	M8x 25 Galvanised Steel
20	8	Z-ACC-SPW8A-00	Spring Washer	M8x 25 Galvanised Steel

FABRICATED BY	DATE
FABRICATION CHECK BY	DATE
WELD CHECK BY	DATE

REV	DATE	DESCRIPTION	DRN	CHK
A	07/08/2024	ISSUE FOR APPROVAL	DS	

DRAWING : ASSEMBLY

GENERAL NOTE

ALL STEELWORK TO BE FABRICATED & ERECTED TO AS4100
ALL WELDS TO BE 6MM C.F.W- U.N.O.
ALL WELDING TO AS1554
ALL CLEATS TO BE ON CENTERLINE U.N.O
HARDSTAMP ASSEMBLY MARK WHERE INDICATED THUS
ALL SNIPES ARE 15x45°

DRAWING TITLE	DRAWING ASSEMBLY		
CONTRACT			
MODELLED BY		CHECKED BY	
SHEET NO.	1 OF 1	DRAWING NO.	REVISION
SCALE.	1:10	-	A