# ENGINEERING PORTFOLIO SAMPLE

DAREN SOMBILON

# TABLE OF CONTENTS

Objective _____ 3

Software Expertise and Industries Served _____ 4

Inventor Work Procedure _____ 5-10

Standard Used _____ 12

Modelling Technique _____ 12

# OBJECTIVE

With over nine years of experience in engineering design, technical drafting, and project coordination, I am pursuing a role as a Engineering Draftsperson with a focus on technical drafting, and process documentation. I offer strong proficiency in CAD software such as AutoCAD, Inventor, Onshape and Solidworks, alongside hands-on experience in 3D modeling,sheet metal design and technical production drawing. My goal is to contribute to the development of accurate, efficient process designs and support seamless project execution, cross functional coordination, and overall operational efficiency.

# SOFTWARE EXPERTISE
# INDUSTRIES SERVED

## AUTOCAD

From aluminum and glass fabrication to cement construction, maintenance, and site development planning. I collaborate with the team to bring innovative solutions by creating precise 2D and 3D designs tailored to development needs

## INVENTOR

My experience in creating 2D drawings and enhancing 3D automation processes for designing spools, handrails, CNC files, and cement plant structures has had a significant impact on standardization.

## SOLIDWORKS

Skilled in sheet metal design for industries such as mining and electrical engineering, with expertise in wiring enclosures, ergonomic brackets, and automated weldments for structural and residential applications.

# INVENTOR WORK PROCEDURE

## METHODS FOR DRAWING

### DRAWING SET SEQUENCE AND LAYOUT

1. Drawing Sheet Setup

2. Index Sheet and Notes Sheet for large project is commonly required

3. General Arrangement Drawing

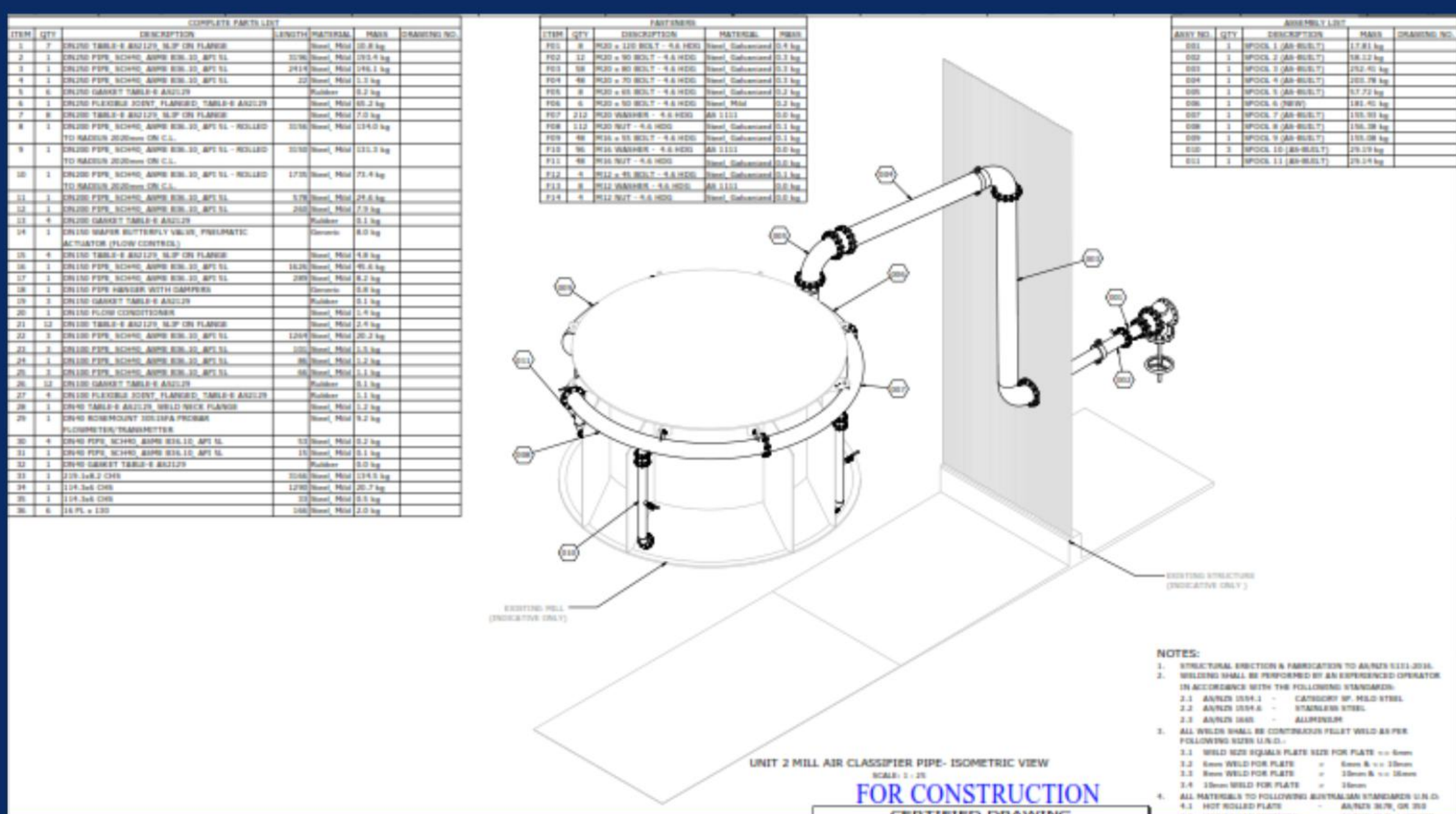

# INVENTOR WORK PROCEDURE

## METHODS FOR DRAWING

### DRAWING SET SEQUENCE AND LAYOUT

4. Set-out Drawing -Site

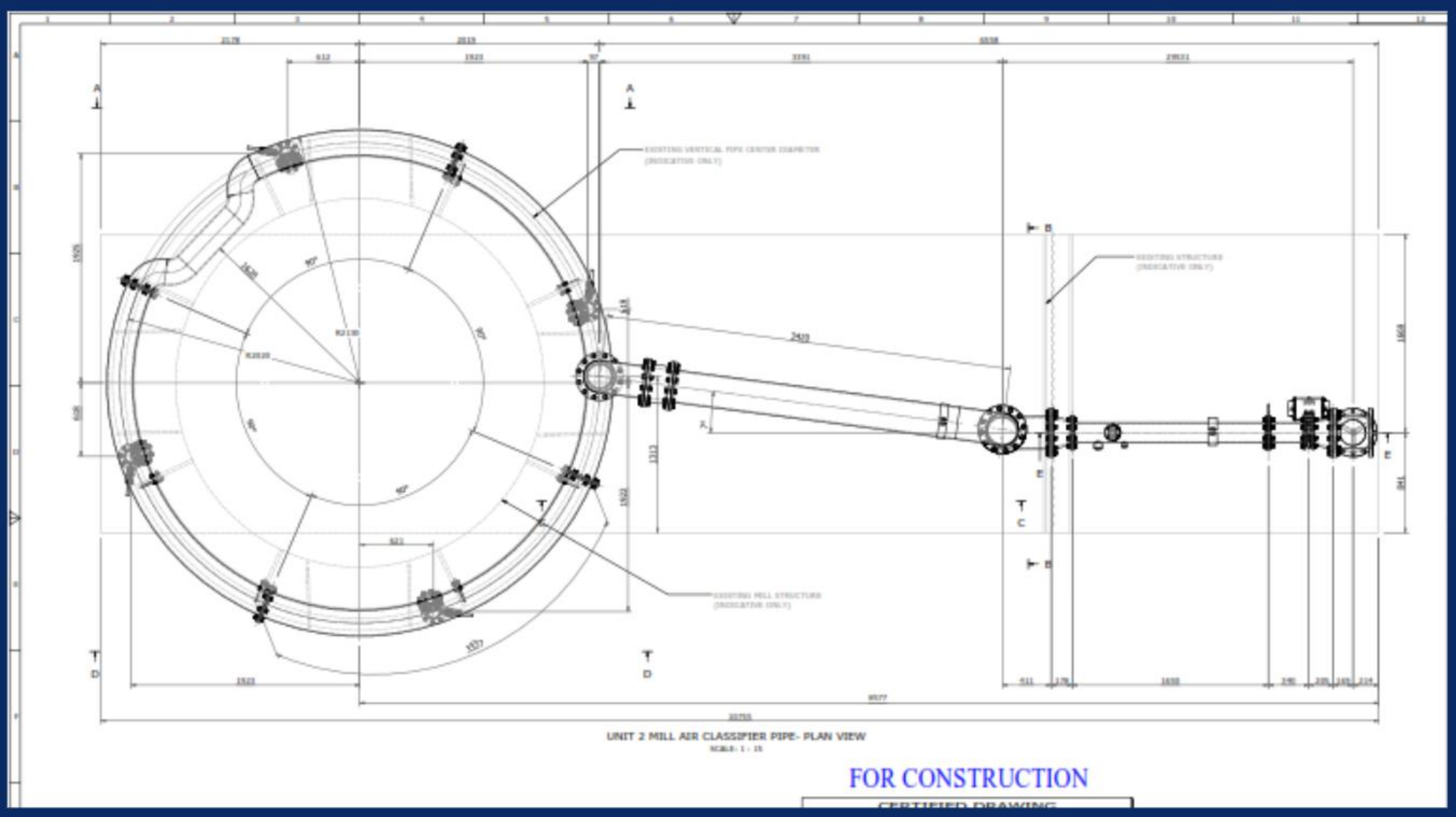


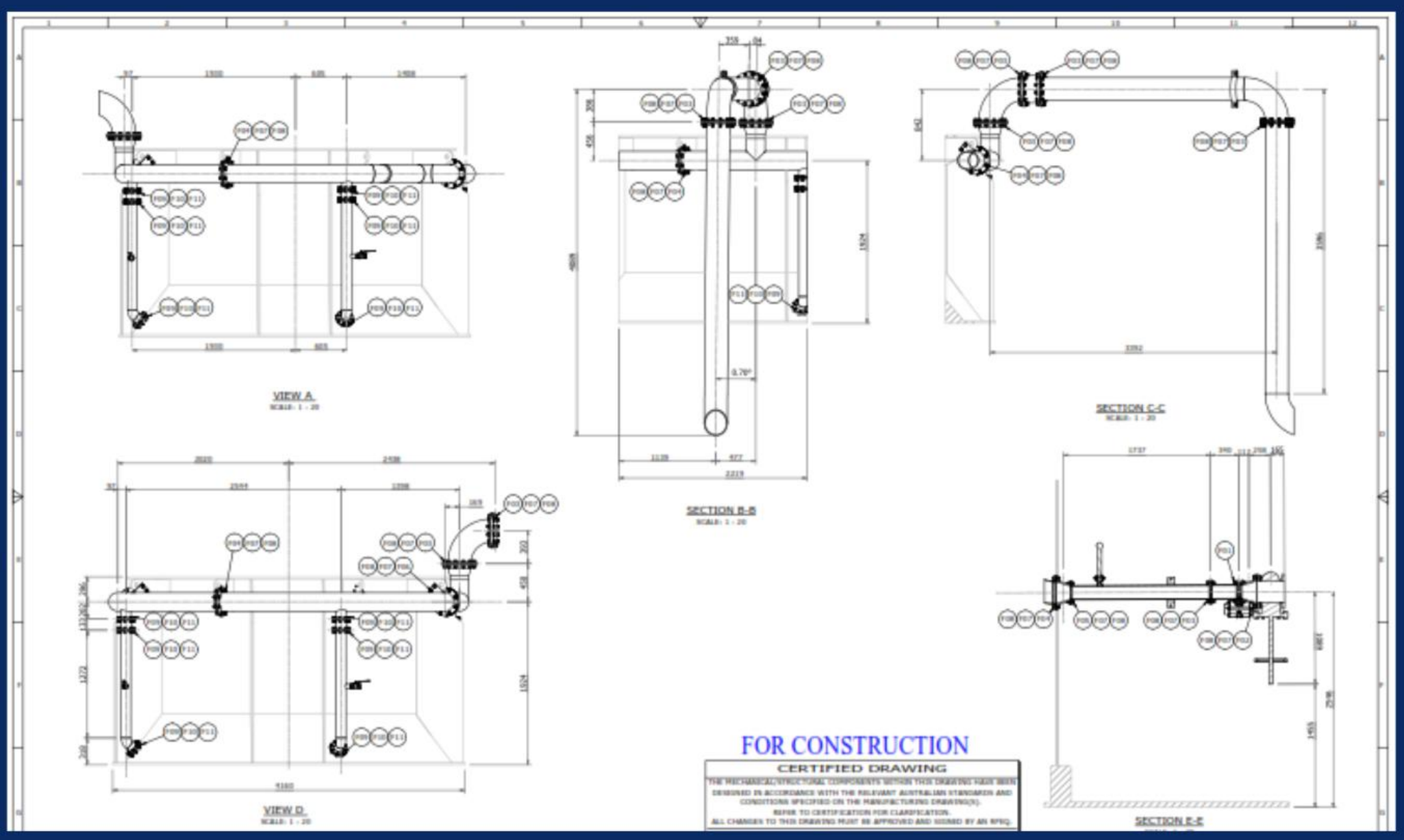

# INVENTOR WORK PROCEDURE

## METHODS FOR DRAWING

### DRAWING SET SEQUENCE AND LAYOUT

5. Assembly Detail Drawings & Part Drawings

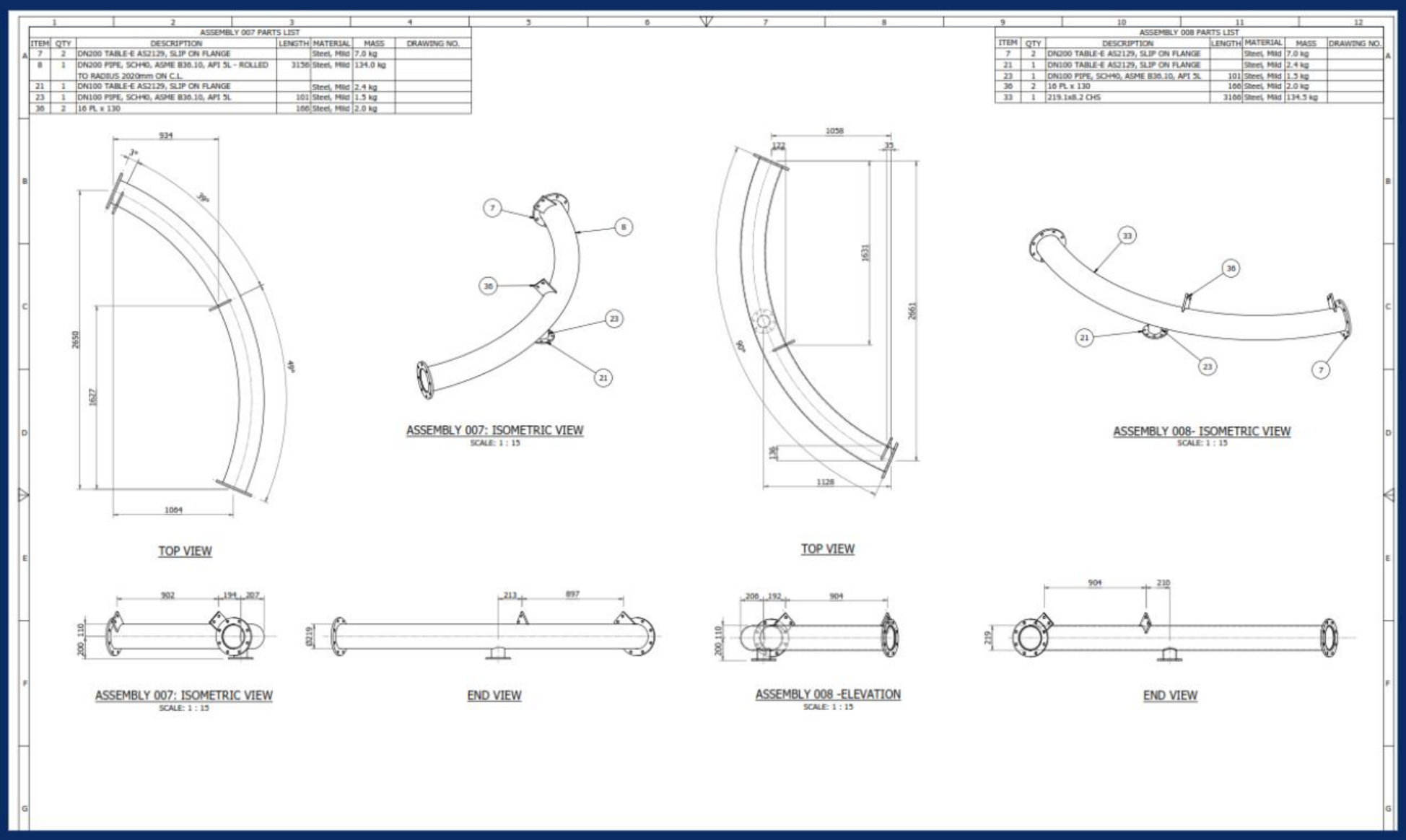


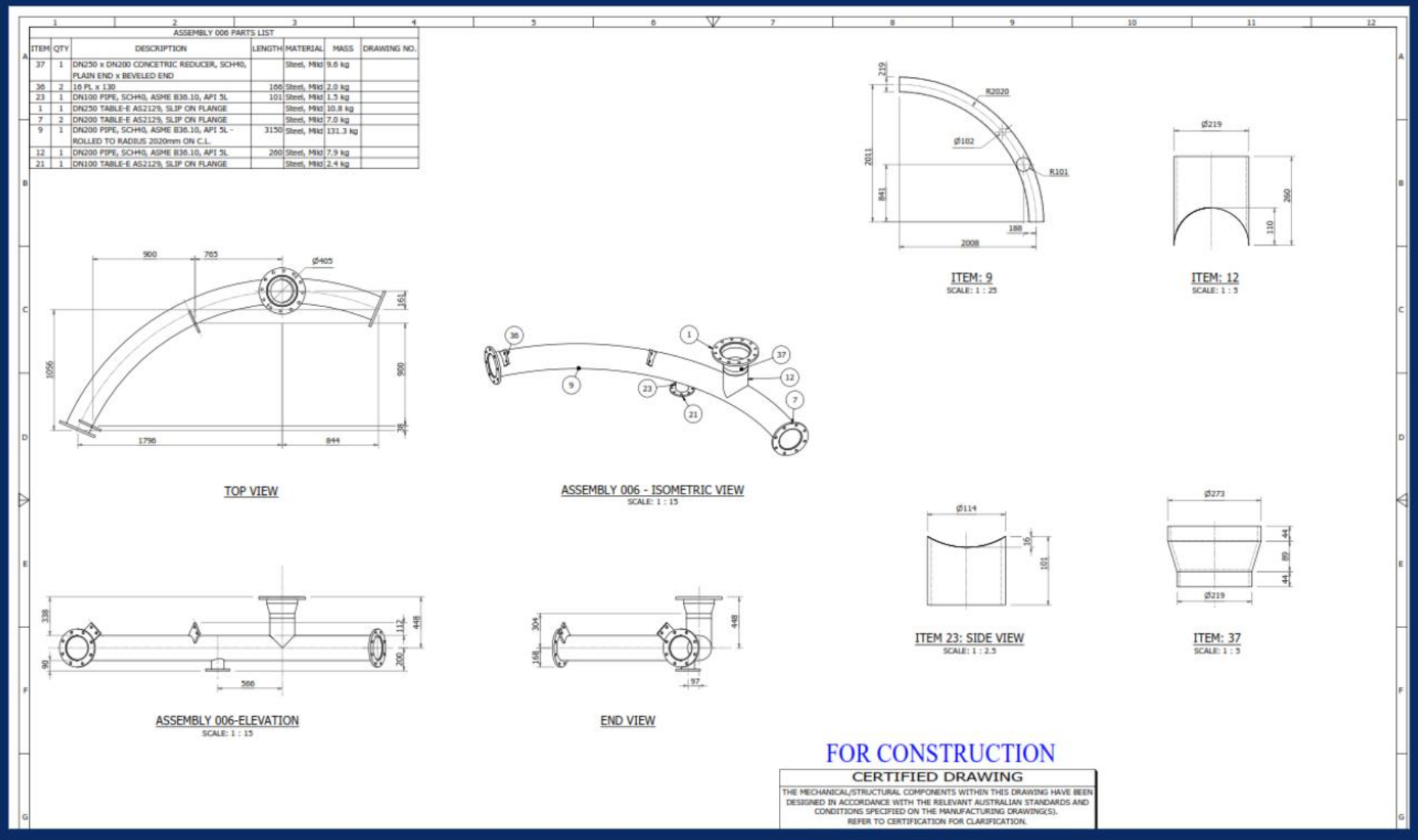

# INVENTOR WORK PROCEDURE

## METHODS FOR DRAWING

### DRAWING SET SEQUENCE AND LAYOUT

5. Assembly Detail Drawings

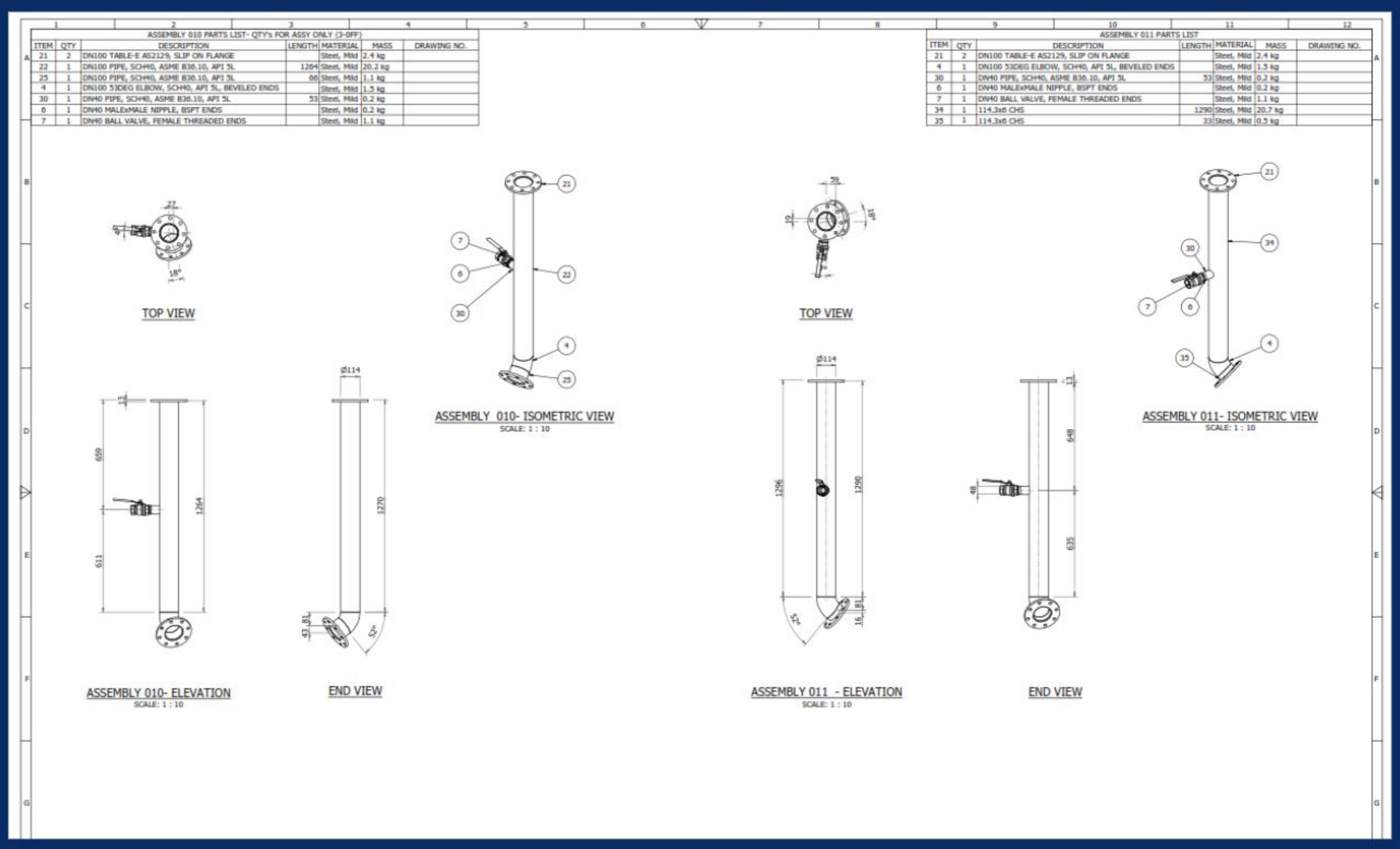

ASSEMBLY 010 PARTS LIST- QTY's FOR ASSY ONLY (3-OFF)

| ITEM | QTY | DESCRIPTION | LENGTH | MATERIAL | MASS | DRAWING NO. |
|---|---|---|---|---|---|---|
| 21 | 2 | DN100 TABLE-E AS2129, SLIP ON FLANGE | | Steel, Mild | 2.4 kg | |
| 22 | 1 | DN100 PIPE, SCH40, ASME B36.10, API 5L | 1264 | Steel, Mild | 20.2 kg | |
| 25 | 1 | DN100 PIPE, SCH40, ASME B36.10, API 5L | 66 | Steel, Mild | 1.1 kg | |
| 4 | 1 | DN100 53DEG ELBOW, SCH40, API 5L, BEVELED ENDS | | Steel, Mild | 1.5 kg | |
| 30 | 1 | DN40 PIPE, SCH40, ASME B36.10, API 5L | 53 | Steel, Mild | 0.2 kg | |
| 6 | 1 | DN40 MALExMALE NIPPLE, BSPT ENDS | | Steel, Mild | 0.2 kg | |
| 7 | 1 | DN40 BALL VALVE, FEMALE THREADED ENDS | | Steel, Mild | 1.1 kg | |

ASSEMBLY 011 PARTS LIST

| ITEM | QTY | DESCRIPTION | LENGTH | MATERIAL | MASS | DRAWING NO. |
|---|---|---|---|---|---|---|
| 21 | 2 | DN100 TABLE-E AS2129, SLIP ON FLANGE | | Steel, Mild | 2.4 kg | |
| 4 | 1 | DN100 53DEG ELBOW, SCH40, API 5L, BEVELED ENDS | | Steel, Mild | 1.5 kg | |
| 30 | 1 | DN40 PIPE, SCH40, ASME B36.10, API 5L | 53 | Steel, Mild | 0.2 kg | |
| 6 | 1 | DN40 MALExMALE NIPPLE, BSPT ENDS | | Steel, Mild | 0.2 kg | |
| 7 | 1 | DN40 BALL VALVE, FEMALE THREADED ENDS | | Steel, Mild | 1.1 kg | |
| 34 | 1 | 114.3x6 CHS | 1290 | Steel, Mild | 20.7 kg | |
| 35 | 1 | 114.3x6 CHS | 33 | Steel, Mild | 0.5 kg | |



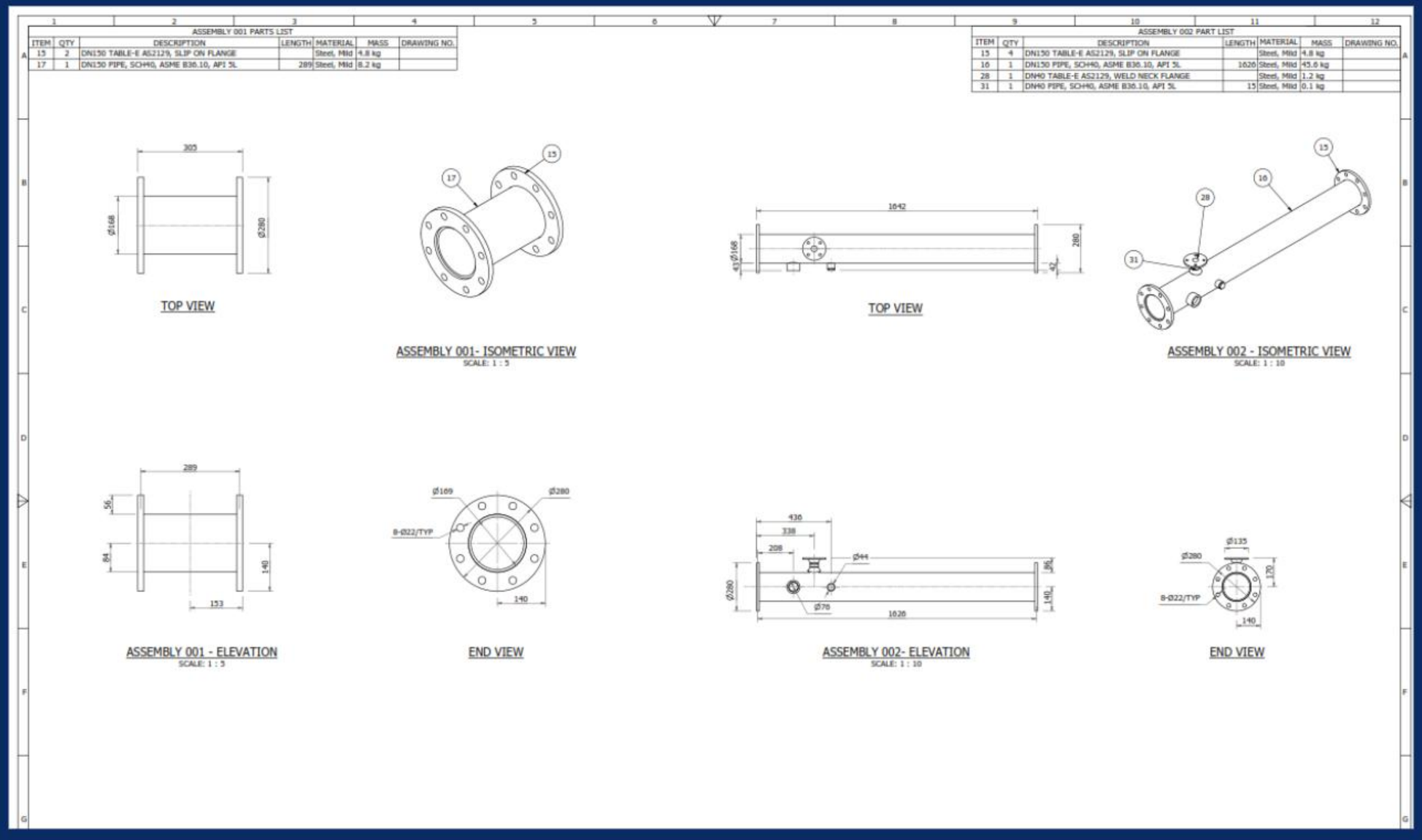

ASSEMBLY 001 PARTS LIST

| ITEM | QTY | DESCRIPTION | LENGTH | MATERIAL | MASS | DRAWING NO. |
|---|---|---|---|---|---|---|
| 15 | 2 | DN150 TABLE-E AS2129, SLIP ON FLANGE | | Steel, Mild | 4.8 kg | |
| 17 | 1 | DN150 PIPE, SCH40, ASME B36.10, API 5L | 289 | Steel, Mild | 8.2 kg | |

ASSEMBLY 002 PART LIST

| ITEM | QTY | DESCRIPTION | LENGTH | MATERIAL | MASS | DRAWING NO. |
|---|---|---|---|---|---|---|
| 15 | 4 | DN150 TABLE-E AS2129, SLIP ON FLANGE | | Steel, Mild | 4.8 kg | |
| 16 | 1 | DN150 PIPE, SCH40, ASME B36.10, API 5L | 1026 | Steel, Mild | 45.6 kg | |
| 28 | 1 | DN40 TABLE-E AS2129, WELD NECK FLANGE | | Steel, Mild | 1.2 kg | |
| 31 | 1 | DN40 PIPE, SCH40, ASME B36.10, API 5L | 15 | Steel, Mild | 0.1 kg | |

# INVENTOR WORK PROCEDURE

## METHODS FOR DRAWING

### DRAWING SET SEQUENCE AND LAYOUT

5. Assembly Detail Drawings

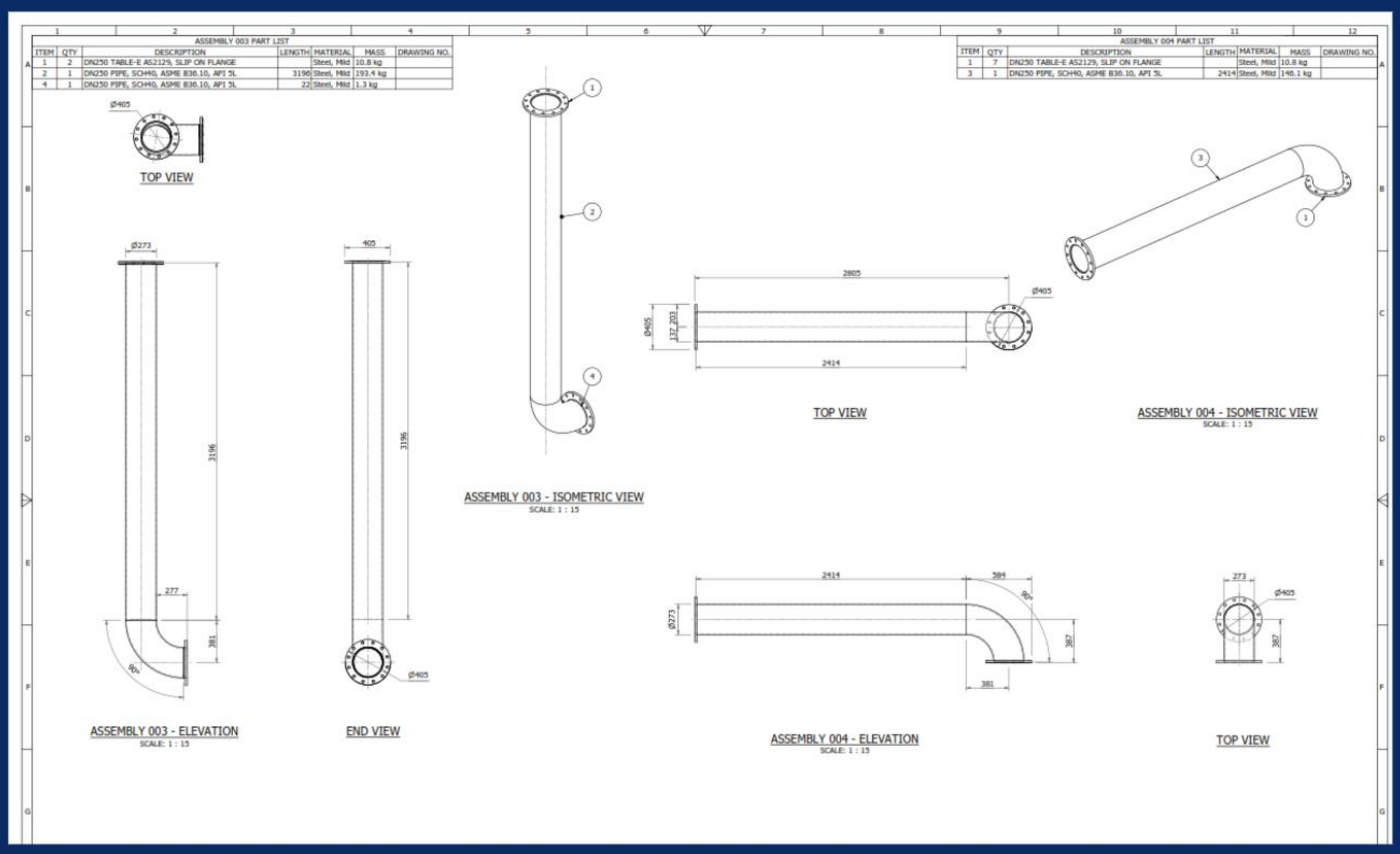

# INVENTOR WORK PROCEDURE

## METHODS FOR DRAWING

### DRAWING SET SEQUENCE AND LAYOUT

6. Part Drawings

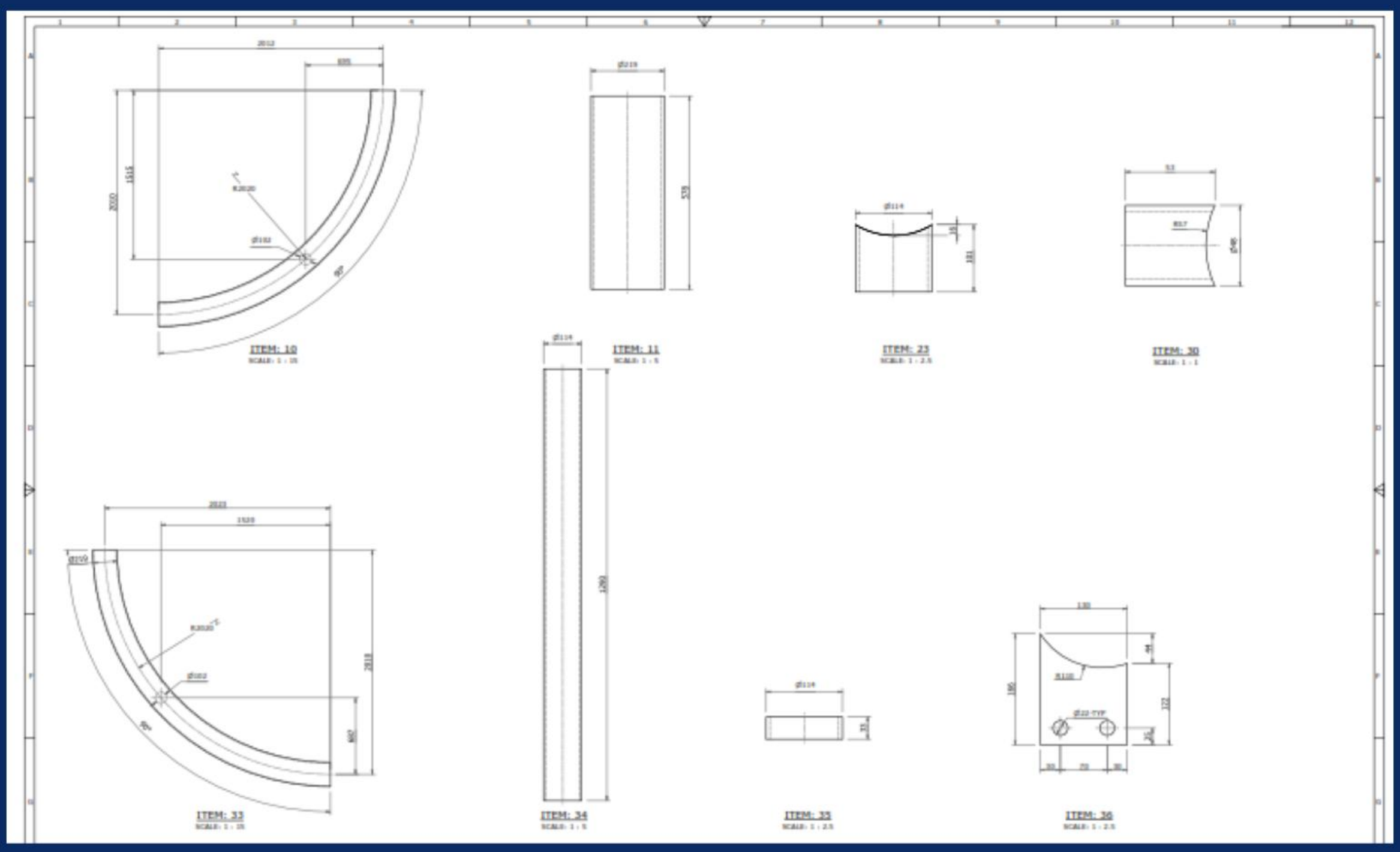

# INVENTOR WORK PROCEDURE

## METHODS FOR DRAWING

### PRESENTATION OF ARRANGEMENT AND SETOUT DRAWINGS

This method enable to clarify or enhance the specific projection, arrangement view, list of tables needed, or even the color projection

1. Existing components and structure - colour
2. Assembly List - table
3. Parts List - table
4. Fasteners - table
5. Detailing of Sub Assemlbies and Parts - projection, arrangment view
6. Labelling of Parts -  naming standard.

### DRAWING CONTENT

1. View labels
2. Dimensioning
3. Sketch Symbols
4. Drawing Notes

### DRAWING TITLE BLOCK TEMPLATES

1. Drawing Title Block Selection
2. Drawing Title Block Data Entry and Entry

### CREATING DXF FILES

1. Standard Plates, Sheet Metal or Flat Bar
2. Pressed Plate

### EXPORTING INVENTOR DRAWINGS TO DWG FORMAT

1. Export to DWG Format

### ILOGIC

1. External Rules and Forms

# STANDARD USED

AUSTRALIAN STANDARDS...

1. AS 1100 – Technical Drawing
2. AS 1100.101 – Technical Drawing – General Principles
3.) AS 1100.201 – Technical Drawing – Mechanical Drawing
4.) AS 1100.301 – Technical Drawing – Architectural Drawing
5.) AS 1100.401 – Technical Drawing – Engineering Survey and Engineering Survey Design Drawing
6.) AS 1100.501 – Technical Drawing – Structural Engineering Drawing

# MODELING TECHNIQUE

MODELLING WITH THE MASTER PART METHODOLOGY

1. Using Top-Down design approach using Master Part Methodology.

# SOLIDWORKS
## SHEET METAL & WELDMENTS
## PORTFOLIO SAMPLE

NOTES
1. TARE: 136KG
2. ALL STEELWORK TO BE IN ACCORDANCE WITH AS3678 AND AS3679 U.O.S.
3. PLATEWORK TO BE GRADE 250. CLOSED HOLLOW SECTIONS TO BE GRADE 350.
4. ALL STEELWORK AND PLATEWORK FABRICATION TO COMPLY WITH AS 4100-1998
5. ALL WELDING TO AS1554 - CATEGORY SP U.O.S.
6. ALL WELDS TO BE CONTINOUS FILLET WELDS U.O.S.
7. ALL WELDS TO BE EQUAL TO MINIMUM THICKNESS OF PLATE U.O.S.
8. ALL SHARP EDGES TO BE REMOVED.
9. FINISH: SEE BLUE SHEET.

| ITEM | QTY | DESCRIPTION | MATERIAL | SOURCE | THK. |
|---|---|---|---|---|---|
| 1 | 1 | RH BENCH DOOR | AS NZS 3678 GR250 | IN-HOUSE | 1.6 |
| 2 | 1 | LH BENCH DOOR | AS NZS 3678 GR250 | IN-HOUSE | 1.6 |
| 3 | 1 | BENCH TOP | AS NZS 3678 GR250 | IN-HOUSE | 3 |
| 4 | 1 | BENCH MID SHELF | AS NZS 3678 GR250 | IN-HOUSE | 1.6 |
| 5 | 1 | MIRROR BENCH MID SHELF | AS NZS 3678 GR250 | IN-HOUSE | 1.6 |
| 6 | 1 | CENTER POST | AS NZS 3678 GR250 | IN-HOUSE | 3 |
| 7 | 2 | DRAW RUNNER 1 | AS NZS 3678 GR250 | IN-HOUSE | 3 |
| 8 | 2 | DRAW RUNNER 2 | AS NZS 3678 GR250 | IN-HOUSE | 3 |
| 9 | 1 | LH BENCH SIDE | AS NZS 3678 GR250 | IN-HOUSE | 3 |
| 10 | 1 | RH BENCH SIDE | AS NZS 3678 GR250 | IN-HOUSE | 3 |
| 11 | 1 | ENCLOSURE BACK PANEL | AS NZS 3678 GR250 | IN-HOUSE | 1.6 |
| 12 | 1 | ENCLOSURE LUG | AS NZS 3678 GR250 | IN-HOUSE | 5 |
| 13 | 1 | ENCLOSURE DIVIDER | AS NZS 3678 GR250 | IN-HOUSE | 1.6 |
| 14 | 4 | UNIVERSAL CASTOR MOUNT PLATE 5mm | 250GR MILD STEEL | IN-HOUSE | 5 |
| 15 | 1 | ENCLOSURE BOTTOM SHELF | AS NZS 3678 GR250 | IN-HOUSE | 1.6 |
| 16 | 2 | HDW - PADBOLT-160MM | AS NZS 3678 GR250 | PURCHASED | |
| 17 | 4 | BULLET HINGE 80mm FEMALE | | PURCHASED | |
| 18 | 4 | BULLET HINGE 80mm MALE | | PURCHASED | |

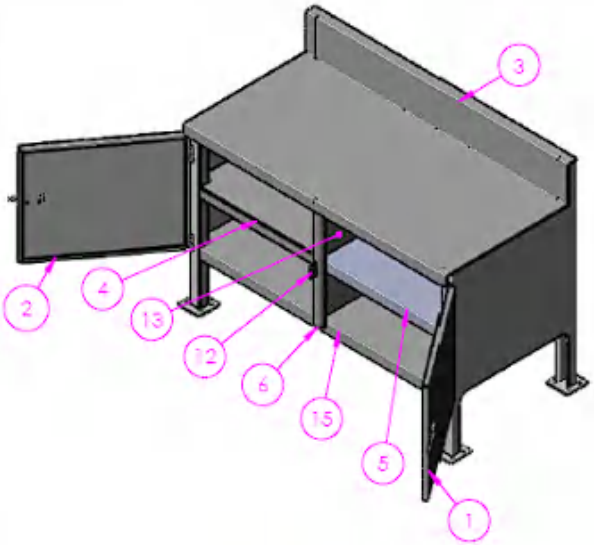


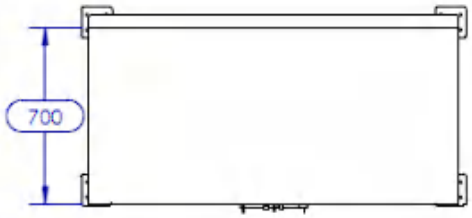


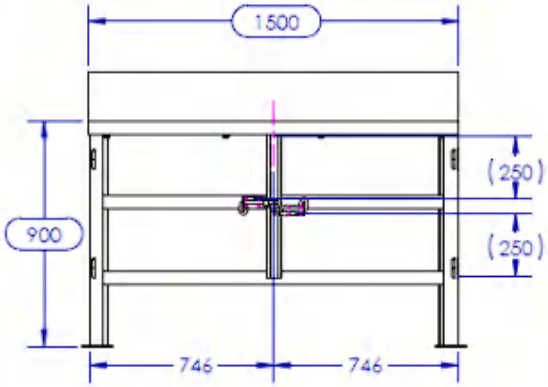


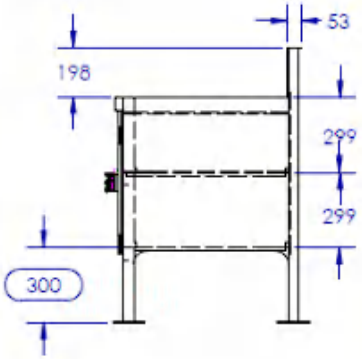


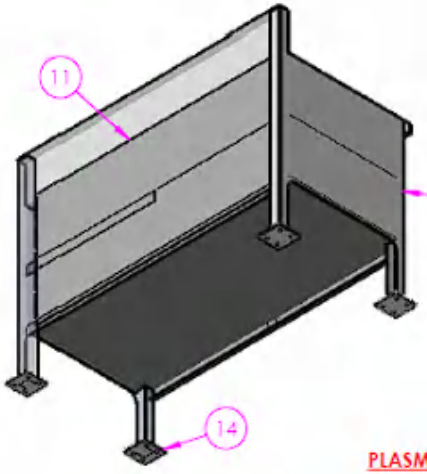


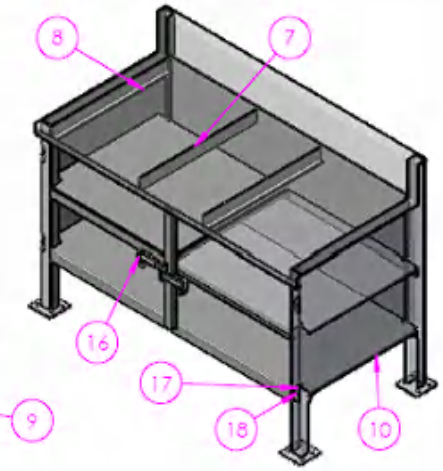


**PLASMA PROGRAMS:**

BENCH ENCLOSURE 1500 C/W DIVIDER-1.6mm
BENCH ENCLOSURE 1500 C/W DIVIDER-3mm
BENCH ENCLOSURE 1500 C/W DIVIDER-5mm

| | NAME | DATE |
|---|---|---|
| DRAWN | DS | 28/07/2026 |
| CHK'D | | |
| APPV'D | | |

DEBURR AND BREAK SHARP EDGES
DRAFTING STANDARD AS1100
UNLESS OTHERWISE SPECIFIED DIMENSIONS ARE IN MILLIMETRES. TOLERANCES: LINEAR: 0.5mm ANGULAR: 0.5°

MASS: 135.6 kg

TITLE: BENCH ENCLOSED, 1500mm L, CW 300mm GROUND CLEARANCE, SHELF, DIVIDER & DOORS

3RD ANGLE PROJECTION

SCALE: 1:20

DO NOT SCALE DRAWING

A3

SHEET 1 OF 7

REVISION A

**NOTES**

1. TARE: 118.9 KG
2. ALL STEELWORK TO BE IN ACCORDANCE WITH AS3678 AND AS3679 U.N.O
3. PLATEWORK TO BE GRADE 250. CLOSED HOLLOW SECTIONS TO BE GRADE 350.
4. ALL STEELWORK AND PLATEWORK FABRICATION TO COMPLY WITH AS 3990 - 1993
5. ALL WELDING TO AS1554 - CATEGORY SP UNO
6. ALL WELDS TO BE 5mm CONTINOUS FILLET WELDS U.N.O
7. FINISH: SEE BLUE SHEET

| ITEM | QTY | PART NAME | MATERIAL | THK | NOTES |
|---|---|---|---|---|---|
| 1 | 2 | ENCLOSED BENCH SHELF | AS NZS 3678 GR250 | 1.6 | |
| 2 | 1 | BACK PANEL | AS NZS 3678 GR250 | 1.6 | |
| 3 | 2 | BACKBOARD U-PRESS | AS NZS 3678 GR250 | 2.5 | |
| 4 | 4 | DRAWER RUNNER | AS NZS 3678 GR250 | 2.5 | |
| 5 | 1 | BENCH SIDE RH | AS NZS 3678 GR250 | 2.5 | |
| 6 | 1 | MIRRORBENCH SIDE RH | AS NZS 3678 GR250 | 2.5 | |
| 7 | 1 | BACKSPLASH PANEL | AS NZS 3678 GR250 | 2.5 | |
| 8 | 1 | BENCHTOP | AS NZS 3678 GR250 | 2.5 | |
| 9 | 4 | STD CASTOR PLATE | AS NZS 3678 GR250 | 5 | |
| 10 | 2 | 125mm SWIVEL AND BRAKE CASTOR I62T15R125 | RUBBER | | PURCHASED |
| 11 | 2 | 125mm FIXED CASTOR | AS NZS 3678 GR 250 | | PURCHASED |
| 12 | 16 | BOLT, M8x25 | | | |
| 13 | 16 | NUT, NYLOCNUT M8 | | | |
| 14 | 32 | WASHER, M8 | | | |

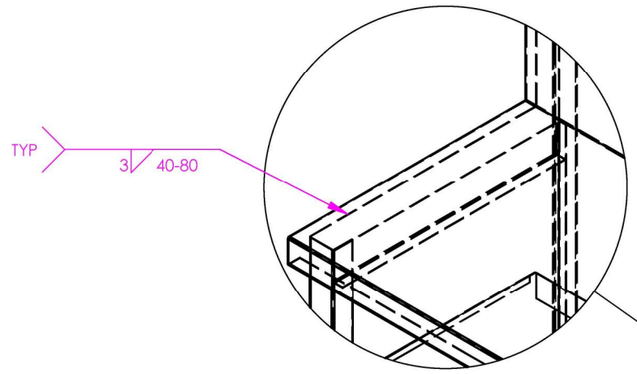


DETAIL A
SCALE 1 : 10

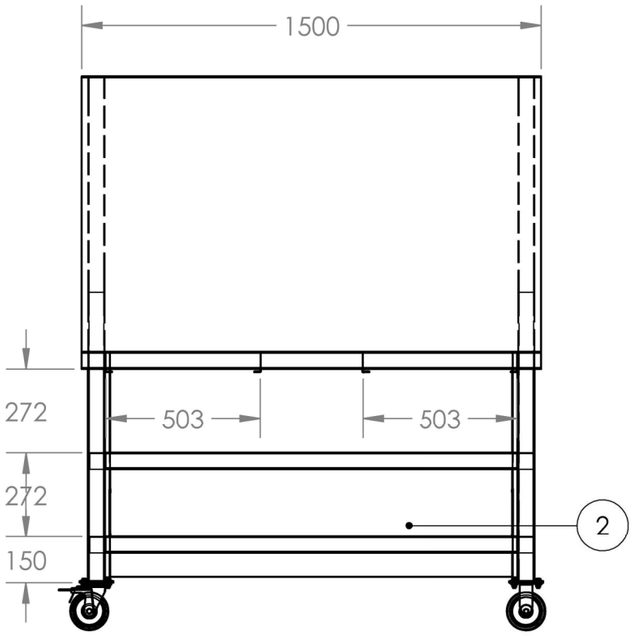


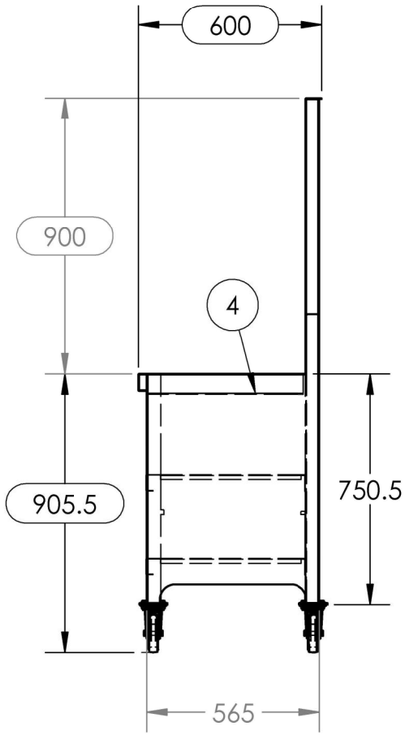


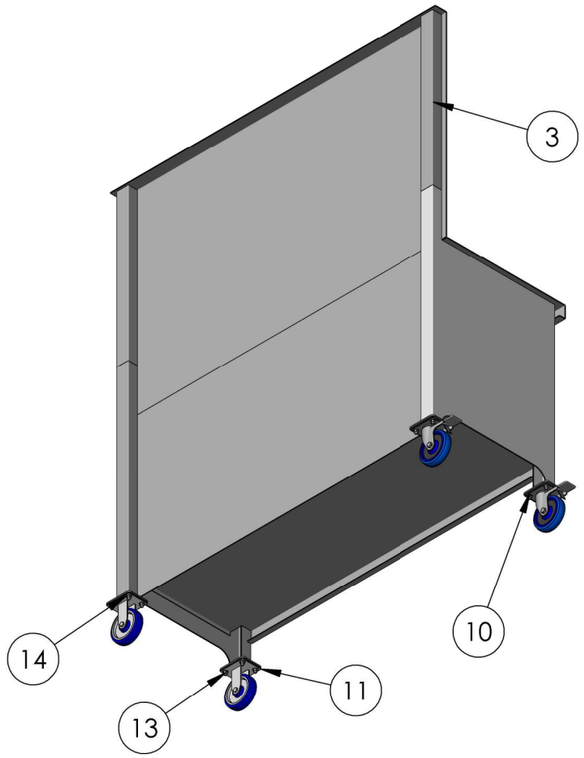


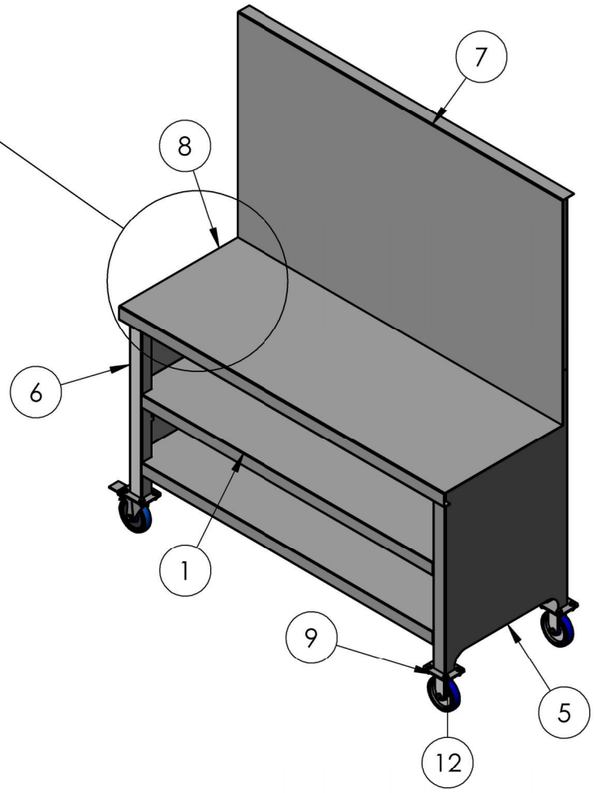


**PLASMA PROGRAMS:**
BS15-SB-600D- 1.6mm -
BS15-SB-600D- 2.5mm -
BS15-SB-600D- 5mm -

| | NAME | DATE |
|---|---|---|
| DRAWN | DS | 23/04/2026 |
| CHK'D | | |
| APPV'D | | |

DEBURR AND BREAK SHARP EDGES
DRAFTING STANDARD AS1100
UNLESS OTHERWISE SPECIFIED DIMENSIONS ARE IN MILLIMETERS. TOLERANCES: LINEAR: 0.5mm, ANGULAR: 0.5°

MASS: 118.9 kg

TITLE: -600D-

3RD ANGLE PROJECTION:

SCALE:1:20

DO NOT SCALE DRAWING

A3

SHEET 1 OF 3

REVISION A

NOTES
1. TARE: 60KG
2. ALL STEELWORK TO BE IN ACCORDANCE WITH AS3678 AND AS3679 U.O.S.
3. PLATEWORK TO BE GRADE 250. CLOSED HOLLOW SECTIONS TO BE GRADE 350.
4. ALL STEELWORK AND PLATEWORK FABRICATION TO COMPLY WITH AS 4100-1998
5. ALL WELDING TO AS1554 - CATEGORY SP U.O.S.
6. ALL WELDS TO BE CONTINOUS FILLET WELDS U.O.S.
7. ALL WELDS TO BE EQUAL TO MINIMUM THICKNESS OF PLATE U.O.S.
8. ALL SHARP EDGES TO BE REMOVED.
9. FINISH: SEE BLUE SHEET.

| ITEM | QTY | PART NAME | MATERIAL | THK. | NOTES |
|---|---|---|---|---|---|
| 1 | 2 | END PLATE | AS NZS 3678 GR250 | 3 | |
| 2 | 2 | SIDE PLATE | AS NZS 3678 GR250 | 3 | |
| 3 | 1 | FLOOR PLATE | CHECKER PLATE | 5 | |
| 4 | 1 | CAGE WELDMENT | | | SEE SEPERATE DRAWING |
| 5 | 4 | WELD-ON LIFTING POINT - VLBS-1.5T | AS NZS 3678 GR250 | 3 | |
| 6 | 1 | 130 X 70 CERT PLATE | 304 STAINLESS STEEL | 1.6 | PURCHASED |
| 7 | 4 | WLL 500KG STICKER | - | 1 | PURCHASED |

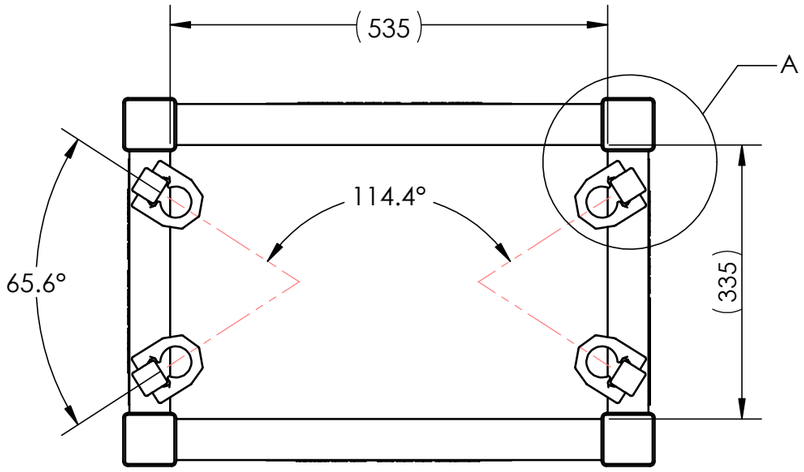


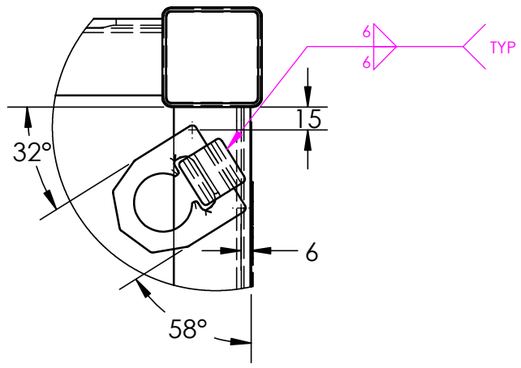


DETAIL A

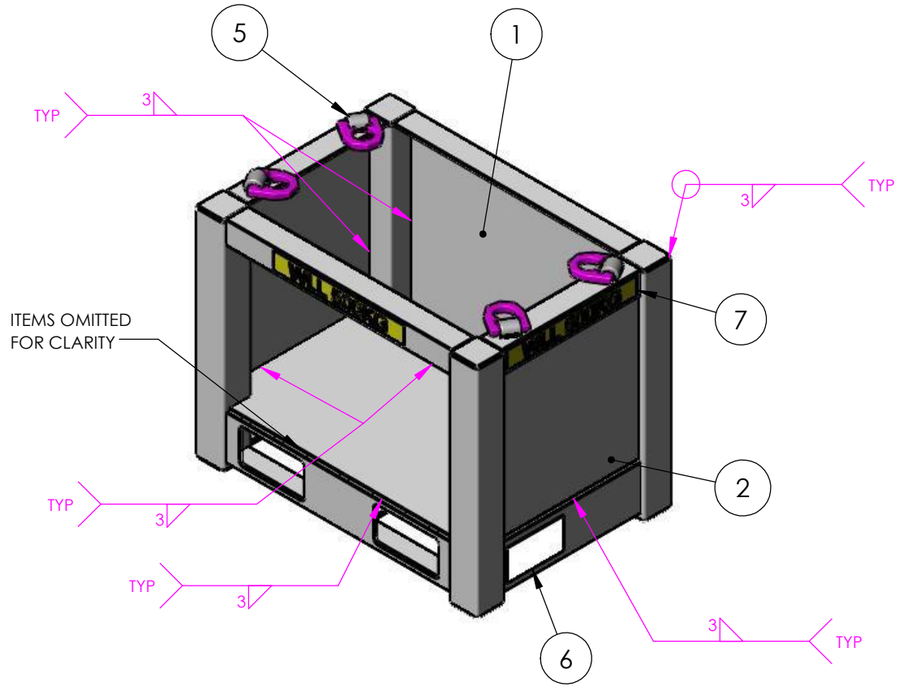


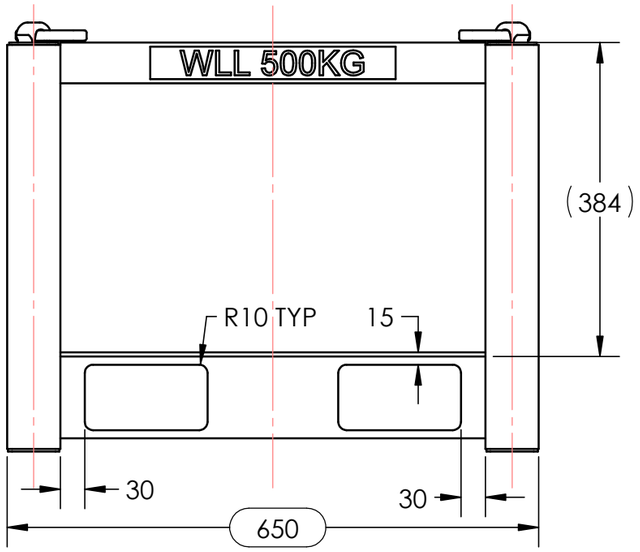


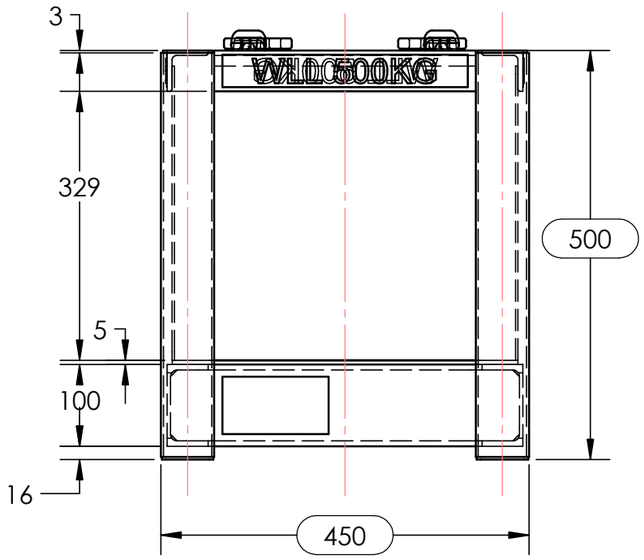


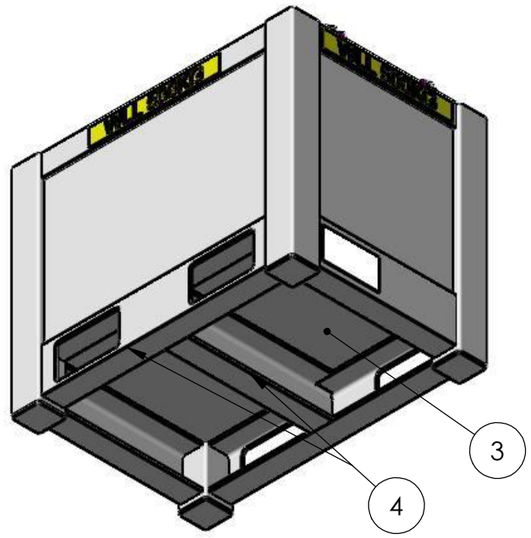


***PLASMA PROGRAMS:***
CERTIFIED CRANE GOODS CAGE CW LIFTING LUGS & FORK POCKETS 3mm -
CERTIFIED CRANE GOODS CAGE CW LIFTING LUGS & FORK POCKETS 5mm

| | NAME | DATE |
|---|---|---|
| DRAWN | DS | 10/04/2026 |
| CHK'D | | |
| APPV'D | | |

UNLESS OTHERWISE SPECIFIED DIMENSIONS ARE IN MILLIMETERS. TOLERANCES: LINEAR: 0.5mm, ANGULAR: 0.5°

DRAFTING STANDARD AS1100
DEBURR AND BREAK SHARP EDGES
MASS: 60kg

TITLE: CERITIFIED CRANE GOODS CAGE

3RD ANGLE PROJECTION:

SCALE:1:10
DO NOT SCALE DRAWING

A3

SHEET 1 OF 6

REVISION A

FILE LOCATION: W:\ CERTIFIED CRANE GOODS CAGE CW LIFTING LUGS & FORK POCKETS - 3\5. SW\CRANE GOODS CAGE WITH FORK POCKETS ADDED\

**NOTES**

1. TARE: 33kg
2. ALL STEELWORK TO BE IN ACCORDANCE WITH AS3678 AND AS3679 U.O.S.
3. PLATEWORK TO BE GRADE 250. CLOSED HOLLOW SECTIONS TO BE GRADE 350.
4. ALL STEELWORK AND PLATEWORK FABRICATION TO COMPLY WITH AS 4100-1998
5. ALL WELDING TO AS1554 - CATEGORY SP U.O.S.
6. ALL WELDS TO BE CONTINOUS FILLET WELDS U.O.S.
7. ALL WELDS TO BE EQUAL TO MINIMUM THICKNESS OF PLATE U.O.S.
8. ALL SHARP EDGES TO BE REMOVED.
9. FINISH: SEE BLUE SHEET.

| ITEM NO. | QTY. | DESCRIPTION | MATERIAL | LENGTH | THK |
|---|---|---|---|---|---|
| 1 | 3 | BASE PLATE | AS NZS 3678 GR350 | 150 | 6 |
| 2 | 1 | 33.7x4.0 CHS | AS NZS 3678 GR350 | 3992 | |
| 3 | 1 | 33.7x4.0 CHS | AS NZS 3678 GR350 | 1061 | |
| 4 | 1 | 33.7x4.0 CHS | AS NZS 3678 GR350 | 850 | |
| 5 | 1 | 33.7x4.0 CHS | AS NZS 3678 GR350 | 1107 | |
| 6 | 1 | TOE BOARD | AS NZS 3678 GR350 | 1992 | 6 |

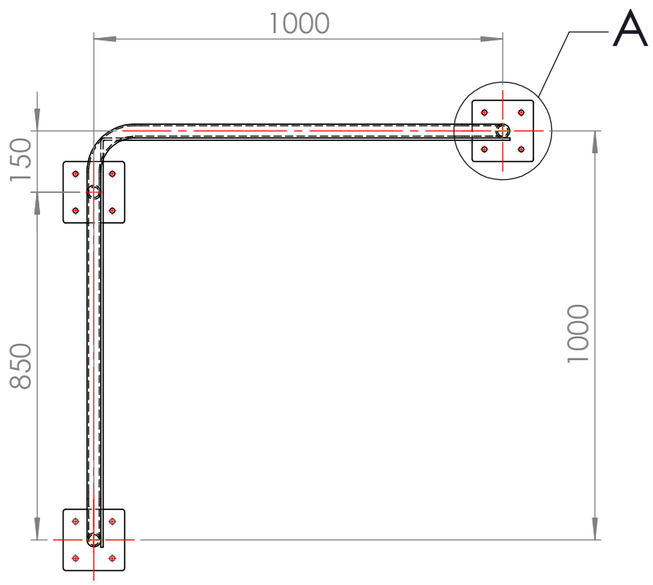


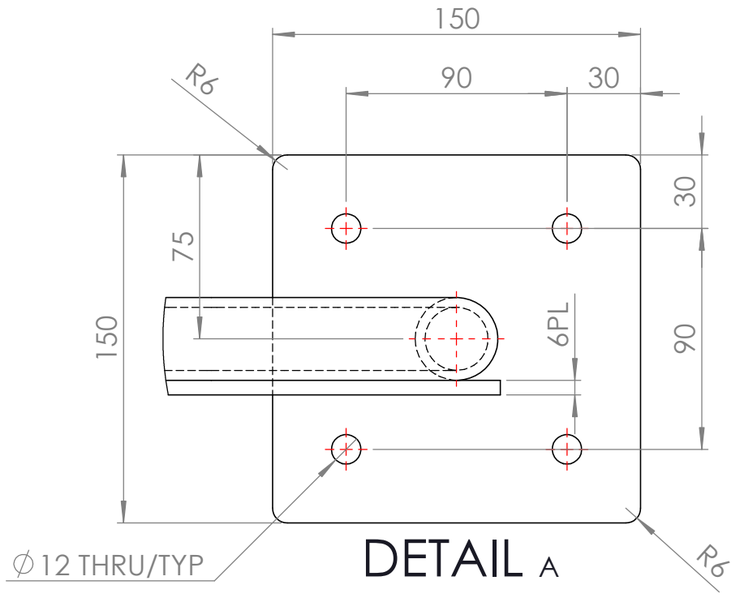


DETAIL A

SCALE 1 : 2.5

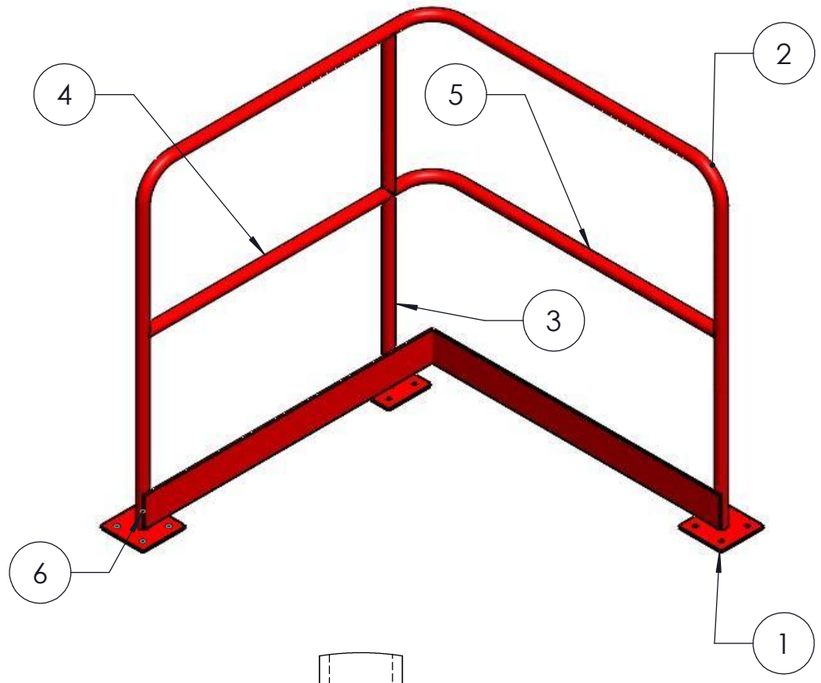


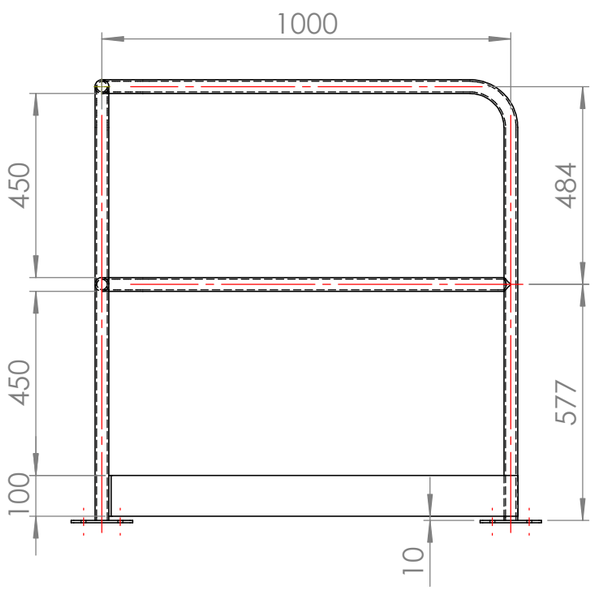


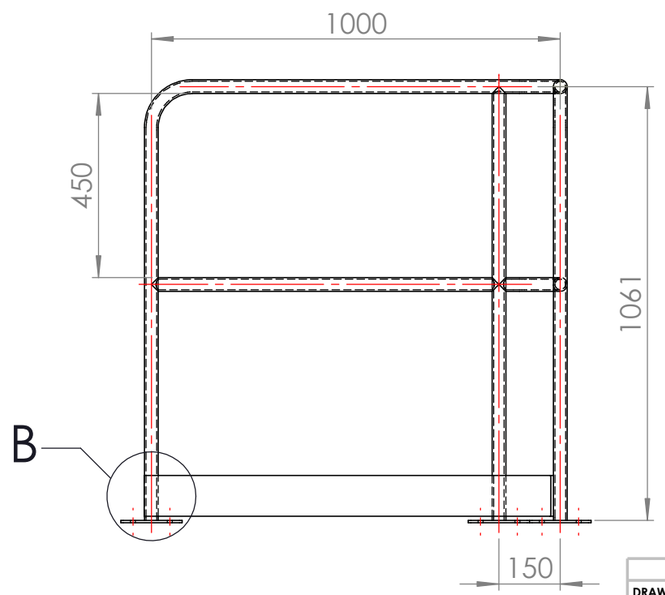


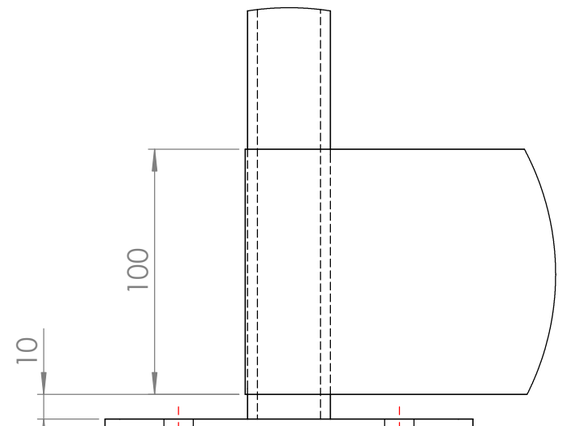


DETAIL B

SCALE 1 : 2.5

| | NAME | DATE |
|---|---|---|
| DRAWN | DS | 6/10/2025 |
| CHK'D | | |
| APPV'D | | |

UNLESS OTHERWISE SPECIFIED DIMENSIONS ARE IN MILLIMETERS. TOLERANCES: LINEAR: 0.5mm, ANGULAR: 0.5°

DRAFTING STANDARD AS1100

DEBURR AND BREAK SHARP EDGES

MASS: 33kg

TITLE: MACHINE SHOP CORNER HANDRAILS DRAWING

3RD ANGLE PROJECTION:

SCALE:1:20

DO NOT SCALE DRAWING

A3

SHEET 1 OF 4

REVISION **A**

FILE LOCATION: W:\ DRAWINGS\MACHINE SHOP CORNER HANDRAILS - 959\5. SW\

**NOTES**

1. TARE: 65kg
2. ALL STEELWORK TO BE IN ACCORDANCE WITH AS3678 AND AS3679 U.O.S.
3. PLATEWORK TO BE GRADE 250. CLOSED HOLLOW SECTIONS TO BE GRADE 350.
4. ALL STEELWORK AND PLATEWORK FABRICATION TO COMPLY WITH AS 4100-1998
5. ALL WELDING TO AS1554 - CATEGORY SP U.O.S.
6. ALL WELDS TO BE CONTINOUS FILLET WELDS U.O.S.
7. ALL WELDS TO BE EQUAL TO MINIMUM THICKNESS OF PLATE U.O.S.
8. ALL SHARP EDGES TO BE REMOVED.
9. FINISH: SEE BLUE SHEET.

| ITEM NO. | QTY. | DESCRIPTION | MATERIAL | LENGTH | THK. |
|---|---|---|---|---|---|
| 1 | 1 | 40x40x2.5 SHS | AS NZS 3678 GR350 | 536 | |
| 2 | 1 | 33.7x4.0 CHS | AS NZS 3678 GR350 | 2125 | |
| 3 | 2 | 100x100x3.0 SHS | AS NZS 3678 GR350 | 1100 | |
| 4 | 1 | 6PL BASE PLATE | AS NZS 3678 GR250 | 1000 | 6 |
| 5 | 1 | STOPPER PLATE | AS NZS 3678 GR250 | 147 | 4 |
| 6 | 4 | FORK TYNE POCKETS | AS NZS 3678 GR250 | 423 | 6 |
| 7 | 2 | SPRING HINGES | AS NZS 3678 GR250 | | |

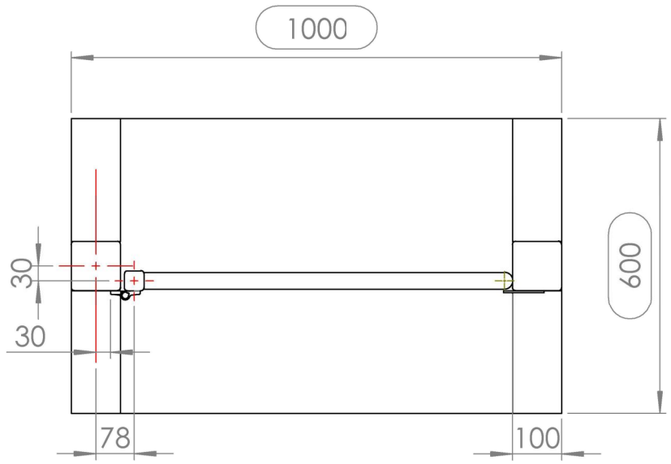


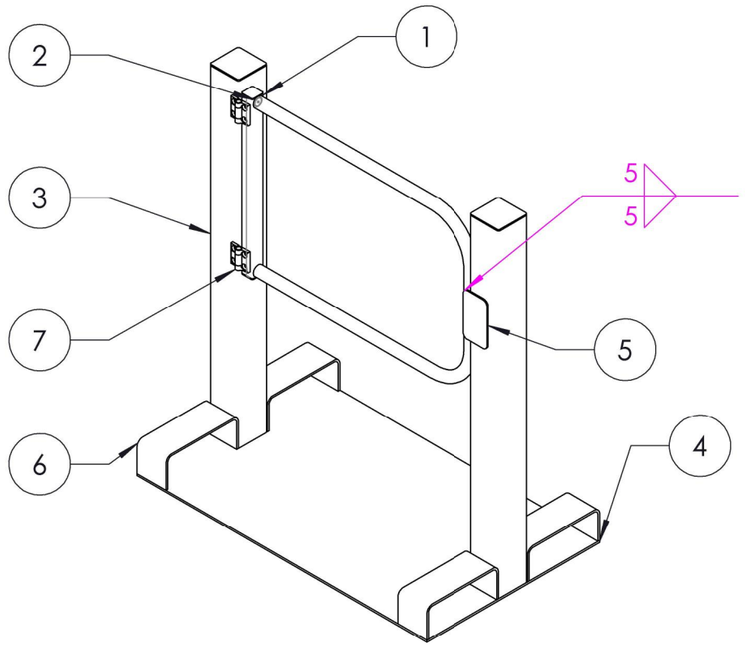


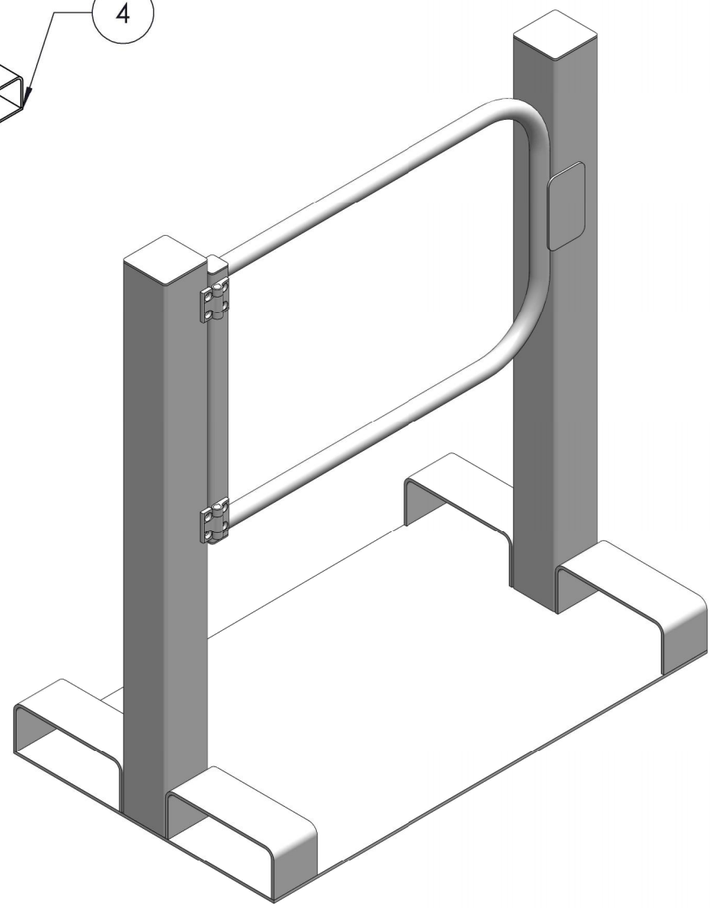

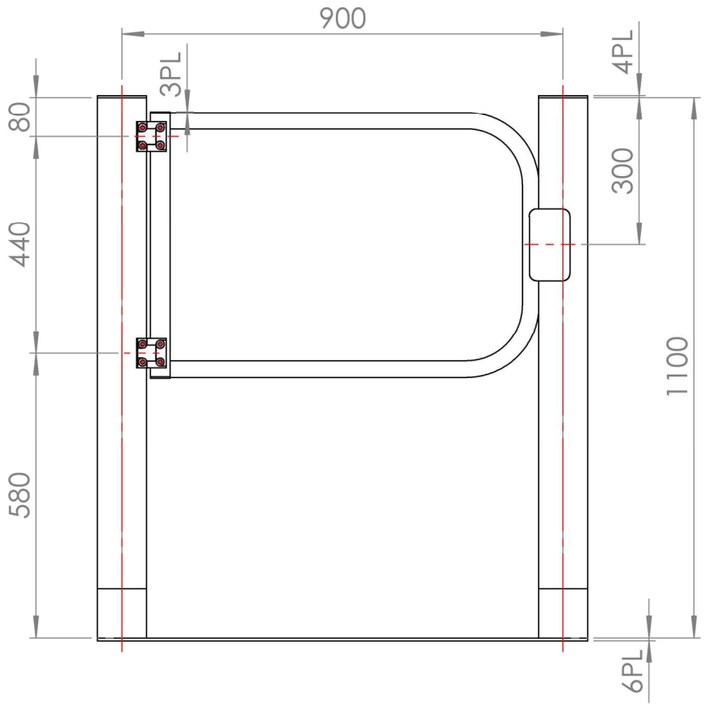


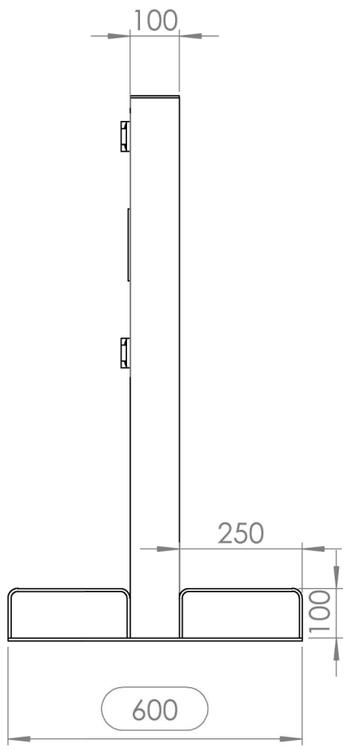


| | NAME | DATE |
|---|---|---|
| DRAWN | DS | 4/11/2025 |
| CHK'D | | |
| APPV'D | | |

UNLESS OTHERWISE SPECIFIED DIMENSIONS ARE IN MILLIMETERS. TOLERANCES: LINEAR: 0.5mm, ANGULAR: 0.5°

DRAFTING STANDARD AS1100

DEBURR AND BREAK SHARP EDGES

MASS: 65KGs

TITLE: EXCLUSIVE CONTROL GATES - 299

3RD ANGLE PROJECTION:

SCALE:1:20

DO NOT SCALE DRAWING

A3

SHEET 1 OF 2

REVISION **A**

FILE LOCATION: W: \EXCLUSIVE CONTROL GATES - 2299\5. SW\

**NOTES**

1. TARE: 16.3 KG
2. ALL ALUMINIUM TO BE IN ACCORDANCE WITH AS/NZ 1734, AS/NZ 1866 AND AS/NZ 1865 U.N.O
3. ALL ALUMINIUM AND PLATEWORK FABRICATION TO COMPLY WITH AS/NZ 1734-1997.
4. ALL WELDING TO AS/NZ 1665 - 2004 - CATEGORY SP UNO
5. ALL WELDS TO BE EQUAL TO MINIMUM THICKNESS OF PLATE.
6. ALL WELD TO BE CONTINOUS FILLET WELDS U.N.O
7. ALL SHARP EDGES TO BE REMOVED.
8. FINISH: SEE BLUE SHEET

| ITEM | QTY | PART NAME | MATERIAL | THK. |
|---|---|---|---|---|
| 1 | 1 | A325ASM12 SERRATED GRATING - 1290 X 990 | ALUMINIUM | 5 |
| 2 | 1 | GRATING FRAME PLATE - 1300 X 1000 | ALUMINIUM | 5 |
| 3 | 2 | HAND HOLD CUT OUT | ALUMINIUM | 5 |

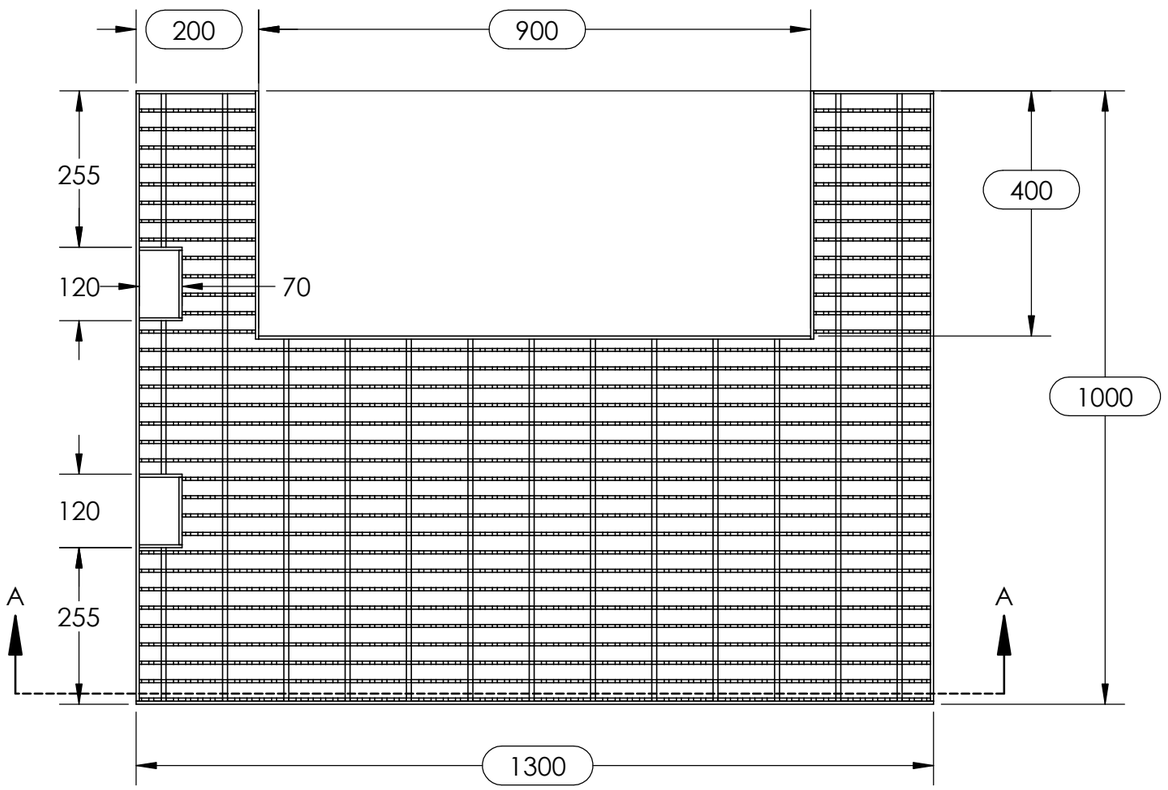


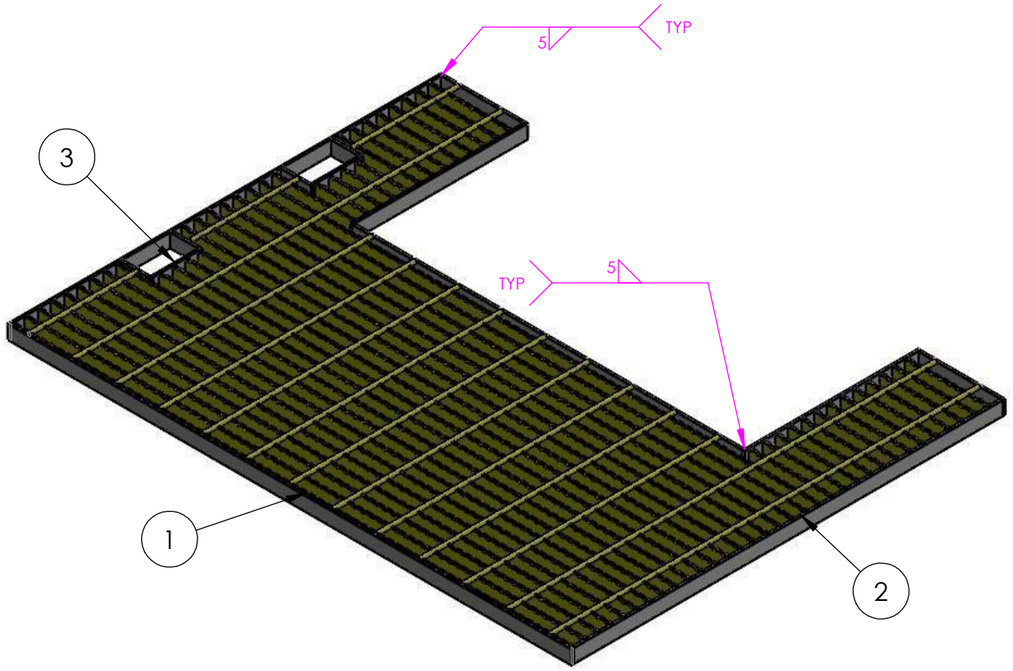


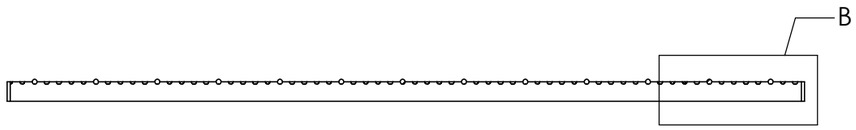


SECTION A-A
SCALE 1 : 10

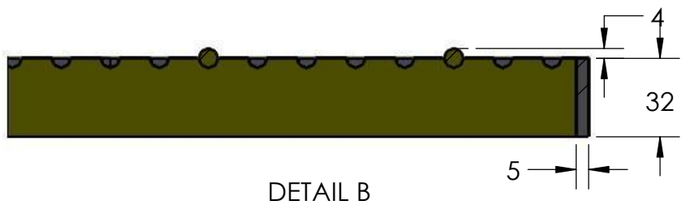


DETAIL B
SCALE 1 : 2.5

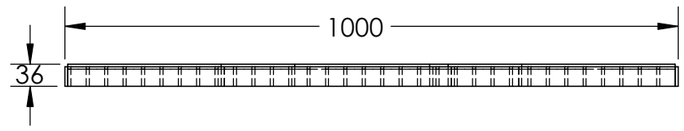


**PLASMA PROG**
MOBILE WORKSHOP

- 5MM -

| | NAME | DATE |
|---|---|---|
| DRAWN | DS | 31/03/2026 |
| CHK'D | | |
| APPV'D | | |

UNLESS OTHERWISE SPECIFIED DIMENSIONS ARE IN MILLIMETERS. TOLERANCES: LINEAR: 0.5mm, ANGULAR: 0.5°

DRAFTING STANDARD AS1100
DEBURR AND BREAK SHARP EDGES
MASS: 48kg

TITLE: MOBILE WORKSHOP ALI STAIR GRATE -

3RD ANGLE PROJECTION:
SCALE:1:20
DO NOT SCALE DRAWING
A3
SHEET 1 OF 6
REVISION **A**

FILE LOCATION: W:\ \MOBILE WROSKHOP ALI STAIR GRATE - FMG-12340\5. SW\

NOTES
1. TARE: 75KG
2. ALL STEELWORK TO BE IN ACCORDANCE WITH AS3678 AND AS3679 U.O.S.
3. PLATEWORK TO BE GRADE 250. CLOSED HOLLOW SECTIONS TO BE GRADE 350.
4. ALL STEELWORK AND PLATEWORK FABRICATION TO COMPLY WITH AS 4100-1998
5. ALL WELDING TO AS1554 - CATEGORY SP U.O.S.
6. ALL WELDS TO BE CONTINOUS FILLET WELDS U.O.S.
7. ALL WELDS TO BE EQUAL TO MINIMUM THICKNESS OF PLATE U.O.S.
8. ALL SHARP EDGES TO BE REMOVED.
9. TIMBER SLATS BY CLIENT/ OTHERS. REFER TO PROJECT SPECIFICATION.
10. CHS LENGTH SHOWN IS THE FABRICATION CUT LENGTH. FINAL ASSEMBLY HEIGHT IS ADJUSTABLE BY LEVELLING FOOT.
11. FINISH: SEE BLUE SHEET.

| ITEM | QTY | PART NAME | MATERIAL | SOURCE |
|---|---|---|---|---|
| 1 | 1 | JF3 CURVE PLATES | SEE DRAWING | IN-HOUSE |
| 2 | 2 | LEGS ASSEMBLY | SUPPLIER SPECIFICATION | SEE DRAWING |
| 3 | 2 | MIRRORLEGS ASSEMBLY | SUPPLIER SPECIFICATION | SEE DRAWING |
| 4 | 8 | SOCKET SET SCREW, M8X16 | SUPPLIER SPECIFICATION | PURCHASED |

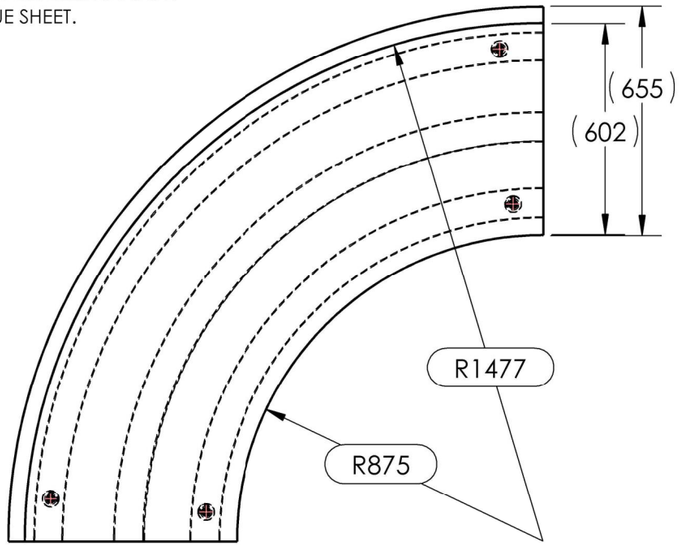


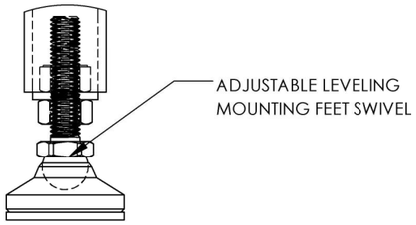


DETAIL A
SCALE 1 : 2.5

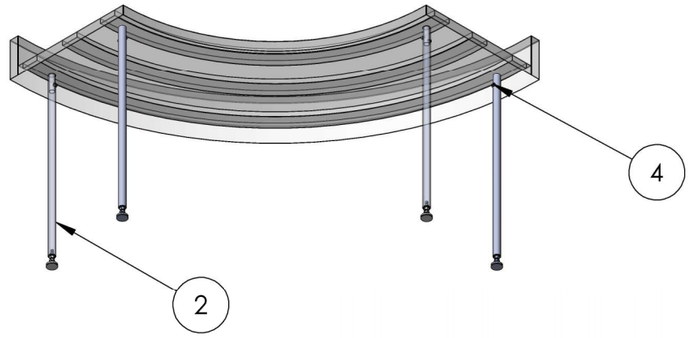


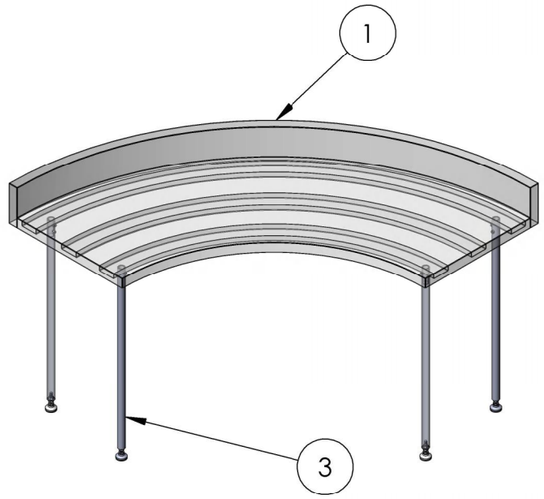


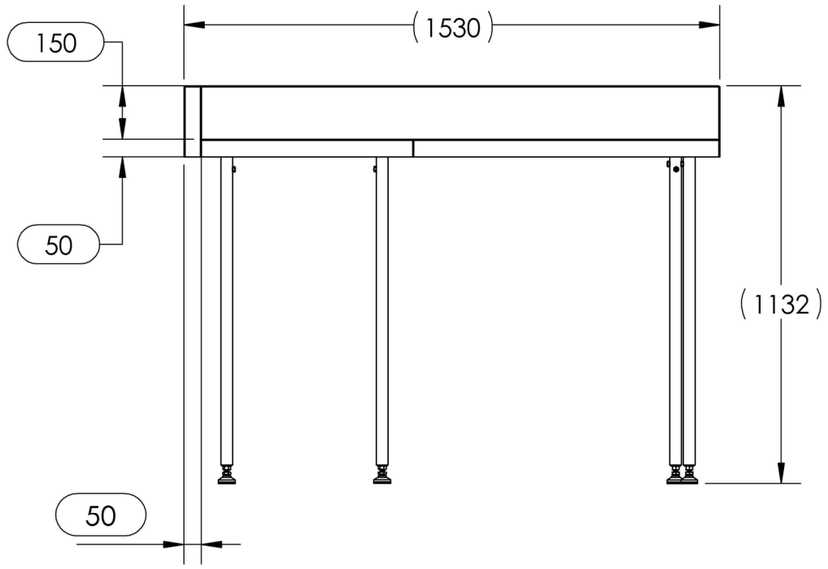


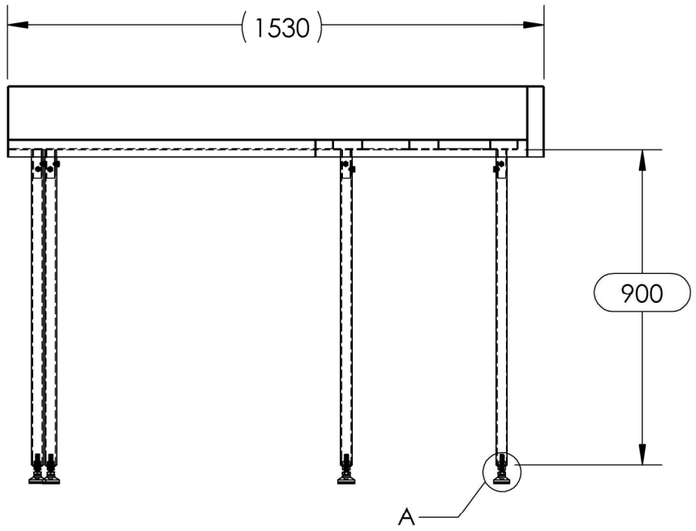


**NOTE : 900 mm CUT LENGTH.**
**FINAL HEIGHT ADJUSTABLE VIA M12 LEVELLING FOOT.**

***PLASMA PROGRAM:***
SS 304 JF3 Joinery - 3MM -

| | NAME | DATE |
|---|---|---|
| DRAWN | DS | 29/07/2026 |
| CHK'D | | |
| APPV'D | | |

UNLESS OTHERWISE SPECIFIED DIMENSIONS ARE IN MILLIMETERS. TOLERANCES: LINEAR: 0.5mm, ANGULAR: 0.5°

DRAFTING STANDARD AS1100
DEBURR AND BREAK SHARP EDGES
MASS: 75kg

TITLE: SS 304 JF3 JOINERY -
3RD ANGLE PROJECTION:
SCALE:1:20
DO NOT SCALE DRAWING
A3
SHEET 1 OF 8
REVISION A

FILE LOCATION: W:\ SS 304 JF JOINERY CW 150mm SPASHBACK & 50mm FRONT LIP - \5. SW\

**NOTES**

1. TARE: 41kg
2. ALL STEELWORK TO BE IN ACCORDANCE WITH AS3678 AND AS3679 U.O.S.
3. PLATEWORK TO BE GRADE 250. CLOSED HOLLOW SECTIONS TO BE GRADE 350.
4. ALL STEELWORK AND PLATEWORK FABRICATION TO COMPLY WITH AS 4100-1998
5. ALL WELDING TO AS1554 - CATEGORY SP U.O.S.
6. ALL WELDS TO BE CONTINOUS FILLET WELDS U.O.S.
7. ALL WELDS TO BE EQUAL TO MINIMUM THICKNESS OF PLATE U.O.S.
8. ALL SHARP EDGES TO BE REMOVED.
9. FINISH: SEE BLUE SHEET.

| ITEM | QTY | PART NAME | MATERIAL | LENGTH | THK. |
|---|---|---|---|---|---|
| 1 | 1 | STEEL PIANO HINGE WITHOUT HOLES | LOW-CARBON STEEL | | |
| 2 | 1 | LID BODY 01 | AS NZS 3678 GR250 | 761 | 3 |
| 3 | 1 | LID BODY 02 | AS NZS 3678 GR250 | 762 | 3 |
| 4 | 2 | LID HANDLE | AS NZS 3678 GR250 | 245 | 3 |

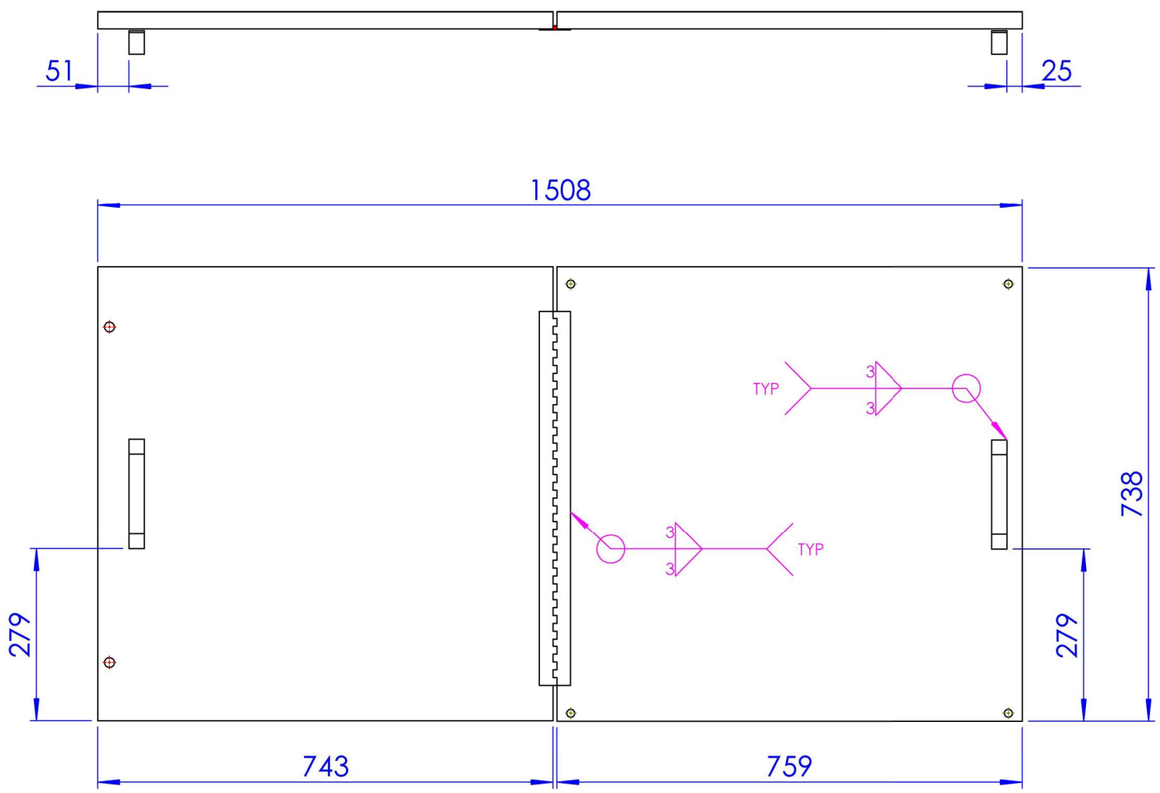


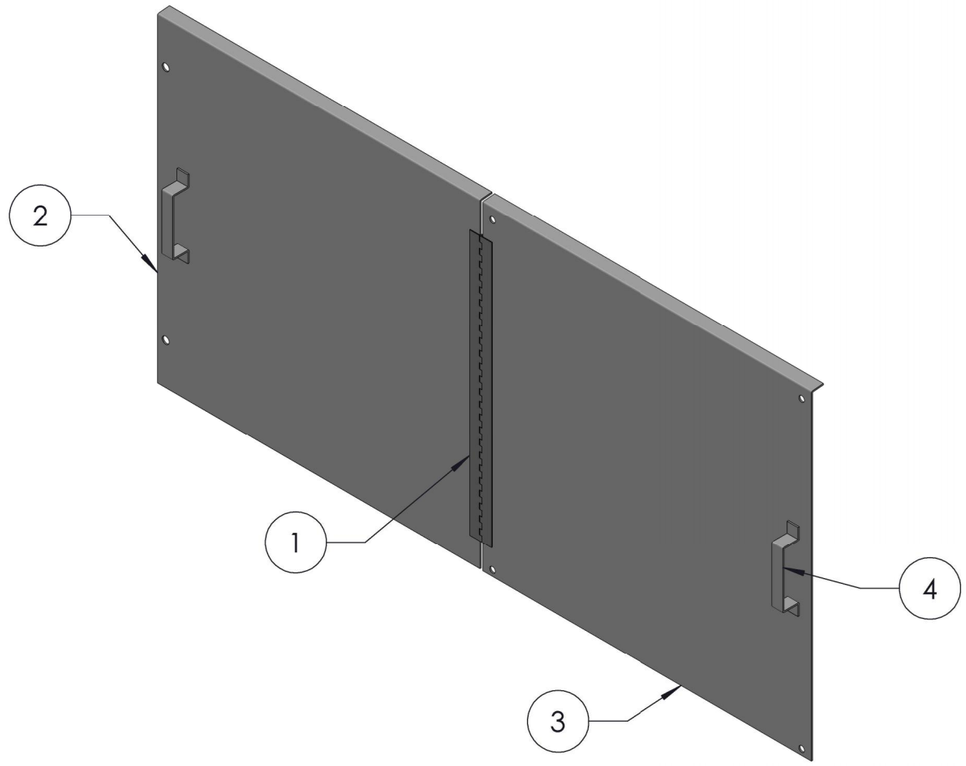


***PLASMA PROGRAM:***

MILD STEEL LIDS - LH&RH c/w CONTINOUS HINGE - 3MM - PAINTED 2P -

| | NAME | DATE |
|---|---|---|
| DRAWN | DS | 15/12/2025 |
| CHK'D | | |
| APPV'D | | |

UNLESS OTHERWISE SPECIFIED DIMENSIONS ARE IN MILLIMETERS. TOLERANCES: LINEAR: 0.5mm, ANGULAR: 0.5°

DRAFTING STANDARD AS1100

DEBURR AND BREAK SHARP EDGES

MASS: 41KGs

TITLE: LID ASSEMBLY_ LH & RH WITH CONTINUOUS HINGE _

3RD ANGLE PROJECTION:

SCALE:1:10

DO NOT SCALE DRAWING

A3

SHEET 1 OF 3

REVISION **A**

FILE LOCATION: W:\ \3MM MILD STEEL LIDS - LH & RH CW CONTINUOS HINGE - \5. SW\

NOTES
1. TARE: 59KG
2. ALL STEELWORK TO BE IN ACCORDANCE WITH AS3678 AND AS3679 U.O.S.
3. PLATEWORK TO BE GRADE 250. CLOSED HOLLOW SECTIONS TO BE GRADE 350.
4. ALL STEELWORK AND PLATEWORK FABRICATION TO COMPLY WITH AS 4100-1998
5. ALL WELDING TO AS1554 - CATEGORY SP U.O.S.
6. ALL WELDS TO BE CONTINOUS FILLET WELDS U.O.S.
7. ALL WELDS TO BE EQUAL TO MINIMUM THICKNESS OF PLATE U.O.S.
8. ALL SHARP EDGES TO BE REMOVED.
9. FINISH: SEE BLUE SHEET.

| ITEM | QTY | PART NAME | MATERIAL | THK |
|---|---|---|---|---|
| 1 | 1 | NITROGEN BOX OUTER 706 X 606 | ALUMINIUM | |
| 2 | 1 | NITROGEN BOX INNER 606 X 506 | ALUMINIUM | |
| 3 | 1 | NITROGEN BOX LOCK PLATE | ALUMINIUM | |
| 4 | 1 | NITROGEN BOX TOP PLATE | ALUMINIUM | |
| 5 | 1 | NITROGEN BOX LID | ALUMINIUM | |
| 6 | 4 | NITROGEN BOX HINGE | ALUMINIUM | |
| 7 | 4 | SWIVEL BRAKE WHEEL URETHANE J32TZ85K125 | URETHANE 125 | |
| 8 | 2 | NUT - M8 WELDNUT | - | |
| 9 | 2 | BOLT - M20 X 50-N | - | |
| 10 | 2 | WASHER - M20 | - | |
| 11 | 2 | BOLT - M12 X 40-N | - | |
| 12 | 2 | NUT - M12 WELDNUT | - | |
| 13 | 2 | WASHER - M12 | - | |
| 14 | 16 | ALUMINIUM RIVET NUT- M8 X 1.25 | ALUMINUM | |
| 15 | 16 | BOLT - M8 X 40 -N | - | |
| 16 | 16 | WASHER - M8 | - | |

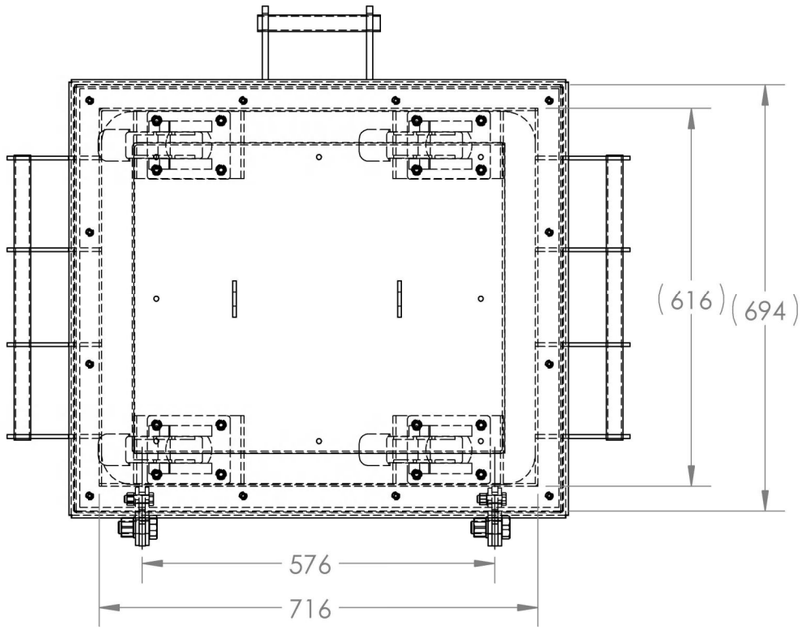


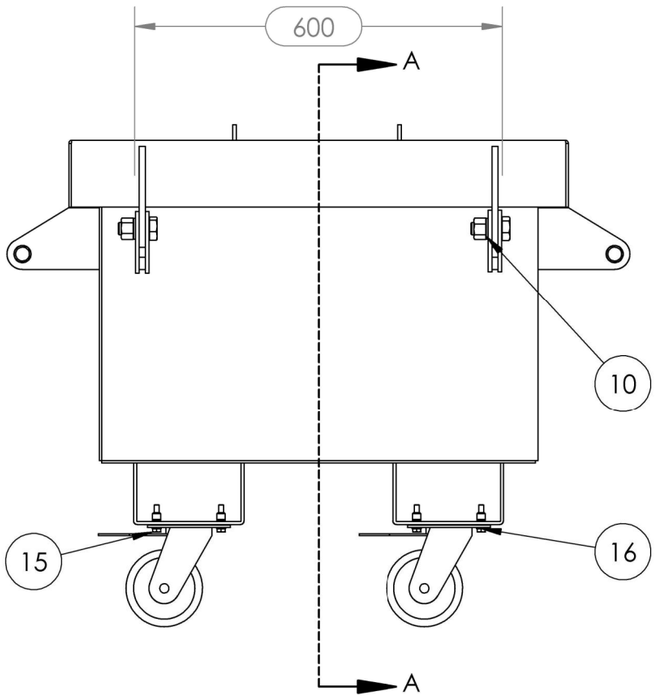


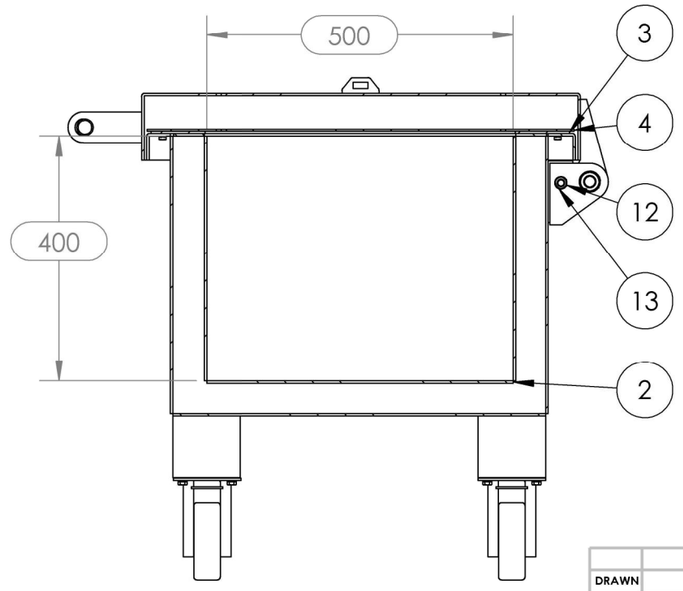


SECTION A-A

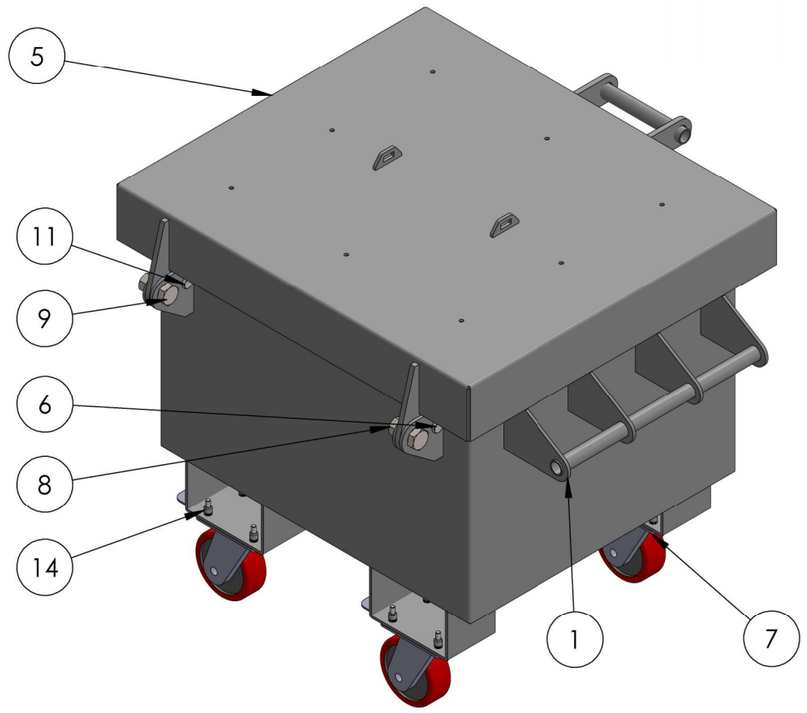


| | NAME | DATE |
|---|---|---|
| DRAWN | DS | 11/03/2026 |
| CHK'D | | |
| APPV'D | | |

UNLESS OTHERWISE SPECIFIED DIMENSIONS ARE IN MILLIMETERS. TOLERANCES: LINEAR: 0.5mm, ANGULAR: 0.5°

DRAFTING STANDARD AS1100

DEBURR AND BREAK SHARP EDGES

MASS: 59kg

TITLE: ALUMINIUM LIQUID NITROGEN CONTAINER -

3RD ANGLE PROJECTION:

SCALE:1:10

DO NOT SCALE DRAWING

A3

SHEET 1 OF 7

REVISION A

FILE LOCATION: W:\ \ALUMINIUM LIQUID NITROGEN CONTAINER (INTERNAL DIMS. L600 X D400, H500MM) - 5. SW\NITROGEN BOX\

NOTES
1. TARE: 97.1 KG
2. ALL STEELWORK TO BE IN ACCORDANCE WITH AS3678 AND AS3679 U.N.O
3. PLATEWORK TO BE GRADE 250. CLOSED HOLLOW SECTIONS TO BE GRADE 350.
4. ALL STEELWORK AND PLATEWORK FABRICATION TO COMPLY WITH AS 4100-1998
5. ALL WELDING TO AS1554 - CATEGORY SP UNO
6. ALL WELDS TO BE 5mm CONTINOUS FILLET WELDS U.N.O
7. FINISH: SEE BLUE SHEET

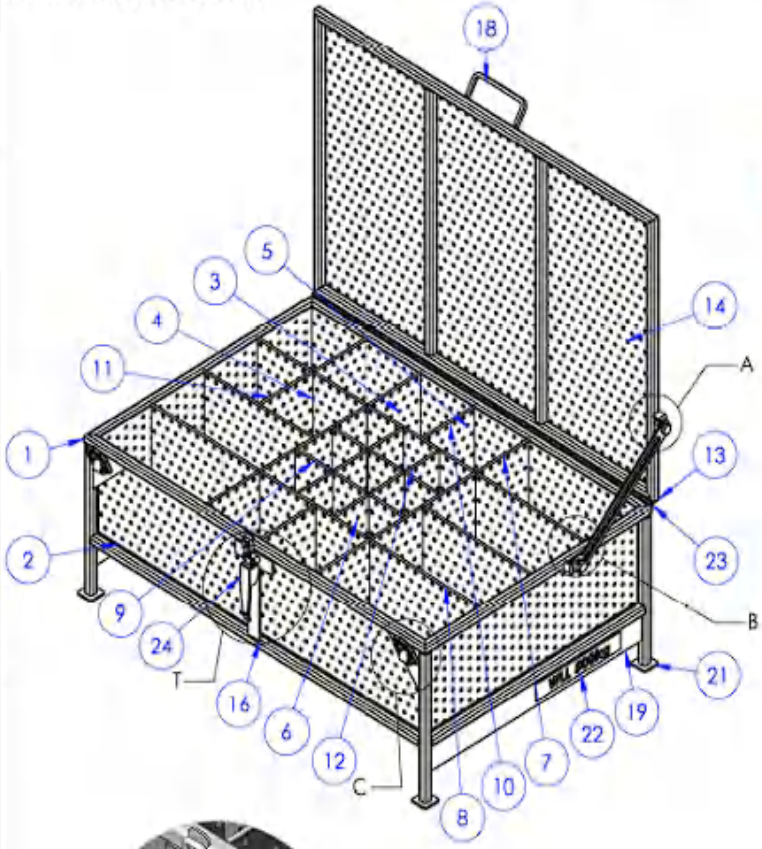


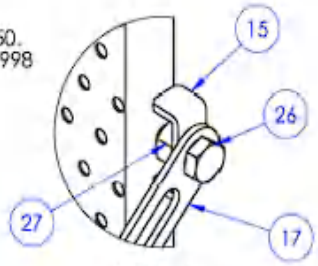


DETAIL A
SCALE 1 : 3

**TIGHTEN BOLTS SECURELY AT THE LID MOUNTING LOCATION.**

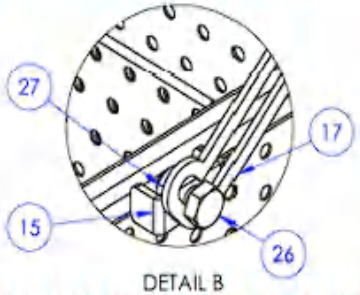


DETAIL B

**BOLT ON LOOSE FOR THE FRAME LEAVE 2mm GAP IN BETWEEN**

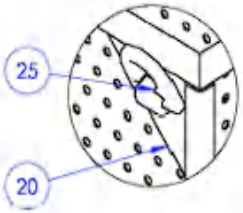


DETAIL C
SCALE 1 : 5

**CENTRE LASHING PLATE ON SHS. MAINTAIN APPROX. 7.5 mm CLEARANCE FROM SHS FRONT FACE.**

USE HD OC LATCH
WITH SMALLER CATCH POSITION
AT BOX CENTRE TO SUIT

DETAIL T
SCALE 1 : 5

| BOM TABLE | | | | | | |
|---|---|---|---|---|---|---|
| ITEM | QTY | DESCRIPTION | MATERIAL | CUT LENGTH | SOURCE | THK. |
| 1 | 1 | BHP BASKET FRAME (SHS 25X3) | AS NZS 3678 GR350 | SEE DRAWING | INHOUSE | |
| 2 | 1 | PERFORATED BASE | AS NZS 3678 GR250 | GILLO | INHOUSE | 1.6 |
| 3 | 2 | DIVIDER - 1 | AS NZS 3678 GR250 | GILLO | INHOUSE | 1.6 |
| 4 | 10 | DIVIDER - 2 | AS NZS 3678 GR250 | GILLO | INHOUSE | 1.6 |
| 5 | 4 | DIVIDER - 3 | AS NZS 3678 GR250 | GILLO | INHOUSE | 1.6 |
| 6 | 6 | DIVIDER - 4 | AS NZS 3678 GR250 | GILLO | INHOUSE | 1.6 |
| 7 | 2 | RB6-1 | AS NZS 3679.1 GR300 | 750 | INHOUSE | |
| 8 | 6 | RB6-2 | AS NZS 3679.1 GR300 | 380 | INHOUSE | |
| 9 | 4 | RB6-3 | AS NZS 3679.1 GR300 | 375 | INHOUSE | |
| 10 | 3 | RB6-4 | AS NZS 3679.1 GR300 | 185 | INHOUSE | |
| 11 | 1 | RB6-5 | AS NZS 3679.1 GR300 | 181 | INHOUSE | |
| 12 | 6 | RB6-6 | AS NZS 3679.1 GR300 | 119 | INHOUSE | |
| 13 | 1 | LID FRAME | AS NZS 3678 GR250 | SEE DRAWING | INHOUSE | |
| 14 | 1 | LID PERF | AS NZS 3678 GR250 | SEE DRAWING | INHOUSE | 1.6 |
| 15 | 2 | LID MOUNT PRESS | AS NZS 3678 GR250 | SEE DRAWING | INHOUSE | 5 |
| 16 | 1 | CATCH FITTING ( T-SHAPE ) | AS NZS 3678 GR250 | SEE DRAWING | INHOUSE | 5 |
| 17 | 1 | TRACK PALLET | AS NZS 3678 GR250 | SEE DRAWING | INHOUSE | 5 |
| 18 | 1 | BHP METSO BOX HANDLE | AS NZS 3678 GR250 | SEE DRAWING | INHOUSE | 10 |
| 19 | 2 | COMPLIANCE PLATE 5mm PL | AS/NZS 3678 - GR250 | SEE DRAWING | INHOUSE | 5 |
| 20 | 4 | LIFTING LUG MOUNTING PLATE | AS NZS 3678 GR250 | SEE DRAWING | INHOUSE | 10 |
| 21 | 4 | SQUARE PLATE FEET (200X200MM) | AS NZS 3678 GR250 | SEE DRAWING | INHOUSE | 5 |
| 22 | 2 | STICKER - WLL 500KG | PP FILM | | STANDARD | 0 |

| PURCHASED COMPONENTS | | BOM TABLE | | | | |
|---|---|---|---|---|---|---|
| ITEM | QTY | DESCRIPTION | MATERIAL | CUT LENGTH | SOURCE | THK. |
| 23 | 2 | PIANO HINGE 40X1.6 | SUPPLIER SPECIFICATION | 1 200 | PURCHASED | 1.6 |
| 24 | 1 | HD OC LATCH SET WITH CATCH TL SPARES SKU 13029 | SUPPLIER SPECIFICATION | | PURCHASED | |
| 25 | 4 | WELD-ON LIFTING POINT | SUPPLIER SPECIFICATION | | PURCHASED | |
| 26 | 2 | BOLT, M16 X 30 GB,8 | ZINC PLATED STEEL | | PURCHASED | |
| 27 | 2 | WELD NUT,M16 | ZINC PLATED STEEL | | PURCHASED | |

PERF PART CODE: (7.94 DIA, 9.55 CENTRES)

| | NAME | DATE |
|---|---|---|
| DRAWN | DS | 29/07/2026 |
| CHK'D | | |
| APPV'D | | |

DEBURR AND BREAK SHARP EDGES
DRAFTING STANDARD AS1100

TITLE: CERTIFIED PERFORATED BASKET_

3RD ANGLE PROJECTION | SCALE:1:20 | DO NOT SCALE DRAWING | A3

SHEET 1 OF 9 | REVISION A

**PLASMA PROGRAMS**

CERTIFIED PERFORATED PARTS BASKET -
CERTIFIED PERFORATED PARTS BASKET -
CERTIFIED PERFORATED PARTS BASKET -

Ask AI Assistant
Convert this PDF to another format

**NOTES**

1. TARE: 307KG
2. ALL STEELWORK TO BE IN ACCORDANCE WITH AS3678 AND AS3679 U.O.S.
3. PLATEWORK TO BE GRADE 250. CLOSED HOLLOW SECTIONS TO BE GRADE 350.
4. ALL STEELWORK AND PLATEWORK FABRICATION TO COMPLY WITH AS 4100-1998
5. ALL WELDING TO AS1554 - CATEGORY SP U.O.S.
6. ALL WELDS TO BE CONTINOUS FILLET WELDS U.O.S.
7. ALL WELDS TO BE EQUAL TO MINIMUM THICKNESS OF PLATE U.O.S.
8. ALL SHARP EDGES TO BE REMOVED.
9. FINISH: SEE BLUE SHEET.

| ITEM | QTY | PART NAME | MATERIAL | LENGTH |
|---|---|---|---|---|
| 1 | 2 | 200 X 100 X 5.0 RHS | AS NZS 3678 GR350 | 636 |
| 2 | 2 | 40X40X4.0 EA | AS NZS 3678 GR250 | 2861 |
| 3 | 2 | 40X40X4.0 EA | AS NZS 3678 GR250 | 620 |
| 4 | 3 | 40X40X4.0 EA | AS NZS 3678 GR250 | 614 |
| 5 | 1 | BODY PANEL | AS NZS 3678 GR250 | 2930 |
| 6 | 1 | LEFT SIDE PANEL | AS NZS 3678 GR250 | 682 |
| 7 | 1 | RIGHT SIDE PANEL | AS NZS 3678 GR250 | 682 |
| 8 | 4 | REMOVABLE MESH FLOOR PANEL | AS NZS 3678 GR250 | 714 |
| 9 | 1 | SPLASH GUARD | AS NZS 3678 GR250 | 2870 |
| 10 | 1 | KEROSENE BATH LID | AS NZS 3678 GR250 | 3056 |
| 11 | 2 | GAS STRUT ASSEMBLY | | |
| 12 | 4 | KEROSENE BATH LEG | AS NZS 3678 GR250 | 750 |
| 13 | 2 | MIDDLE LEG SUPPORT ASSEMBLY | AS NZS 3678 GR250 | 571 |
| 14 | 6 | FOOT PLATE | AS NZS 3678 GR250 | 90 |
| 15 | 2 | LATCH PLATE | AS NZS 3678 GR250 | 104 |
| 16 | 1 | METSO BOX HANDLE 10mm | AS/NZS 3678 - GR250 | 180 |
| 17 | 2 | OJOP CATCH PART1 | AS NZS 3678 GR250 | |
| 18 | 2 | OJOP CATCH | ZINC PLATED MILD STEEL | |
| 19 | 1 | GUDGEN HINGE LH | AS NZS 3678 GR250 | 90 |
| 20 | 1 | GUDGEN HINGE RH | AS NZS 3678 GR250 | 90 |
| 21 | 2 | GUDGEN HINGE STRAP | AS NZS 3678 GR250 | 40 |
| 22 | 1 | PUMP MODEL | | |
| 23 | 1 | 1 INCH BSP SOCKET | AS NZS 3678 GR250 | |

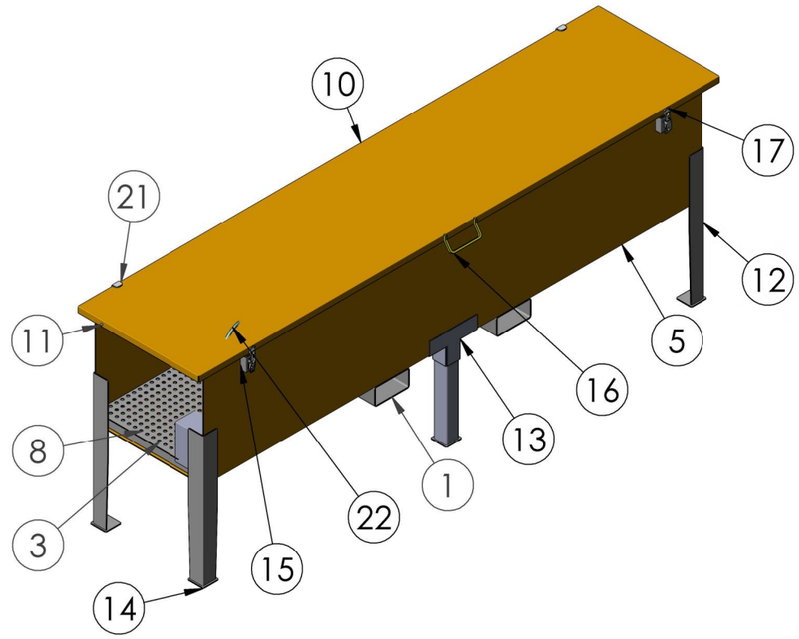


**END PLATE HIDDEN FOR CLARITY**

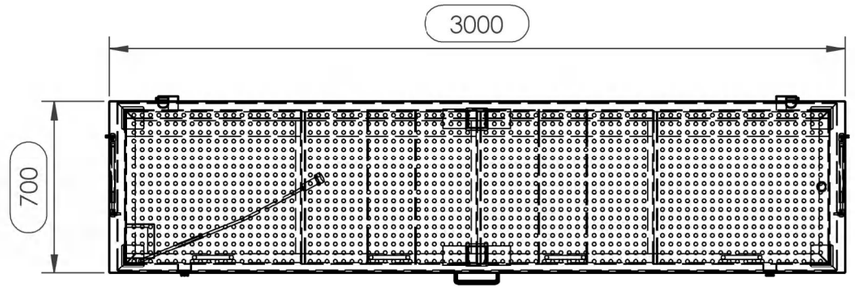


**FLUID HOSE AND PUMP NOT SUPPLIED- SHOWN HERE FOR DEMONSTRATION PURPOSES**

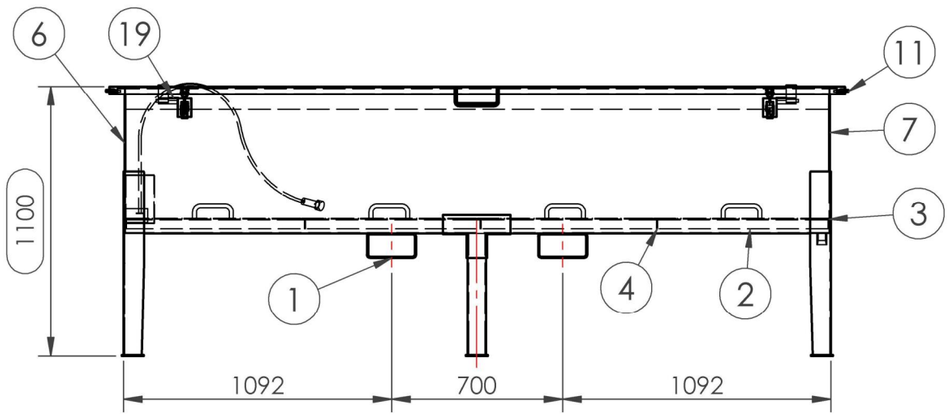


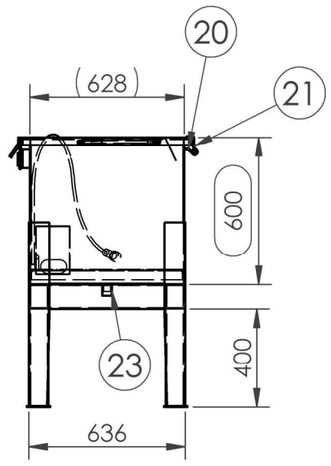


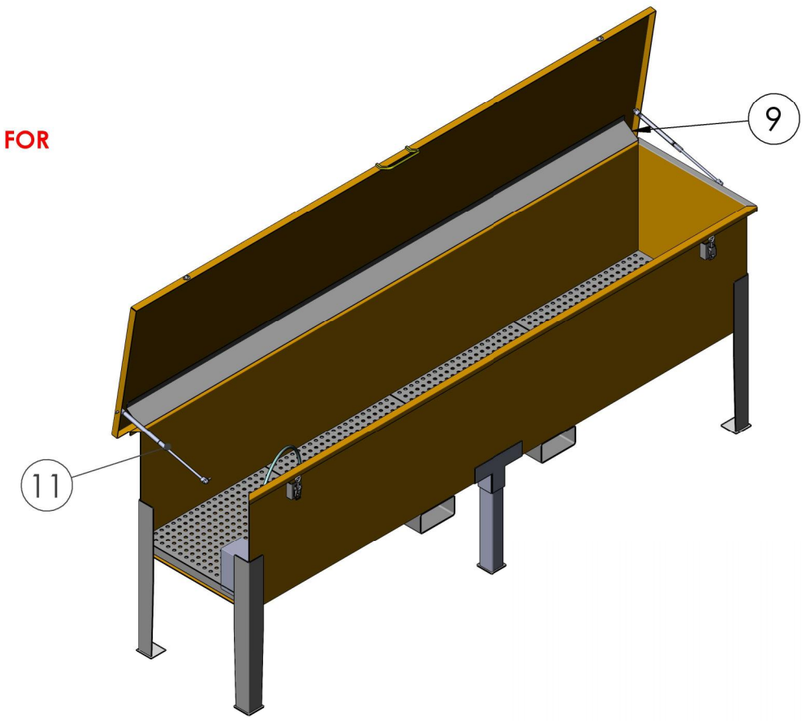


**PLASMA PROGRAMS:**
KEROSENE BATH 2mm - I
KEROSENE BATH 3mm - I
KEROSENE BATH 4mm - I

| | NAME | DATE |
|---|---|---|
| DRAWN | DS | 30/10/2025 |
| CHK'D | | |
| APPV'D | | |

DEBURR AND BREAK SHARP EDGES

DRAFTING STANDARD AS1100

UNLESS OTHERWISE SPECIFIED DIMENSIONS ARE IN MILLIMETERS. TOLERANCES: LINEAR: 0.5mm, ANGULAR: 0.5°

MASS: 307 kg

TITLE: KEROSENE BATH-

3RD ANGLE PROJECTION:

SCALE:1:12

DO NOT SCALE DRAWING

A3

SHEET 1 OF 10

REVISION A

**NOTES**

1. TARE: 159.9kg
2. ALL STEELWORK TO BE IN ACCORDANCE WITH AS3678 AND AS3679 U.O.S.
3. PLATEWORK TO BE GRADE 250. CLOSED HOLLOW SECTIONS TO BE GRADE 350.
4. ALL STEELWORK AND PLATEWORK FABRICATION TO COMPLY WITH AS 4100-1998
5. ALL WELDING TO AS1554 - CATEGORY SP U.O.S.
6. ALL WELDS TO BE CONTINOUS FILLET WELDS U.O.S.
7. ALL WELDS TO BE EQUAL TO MINIMUM THICKNESS OF PLATE U.O.S.
8. ALL SHARP EDGES TO BE REMOVED.
9. FINISH: SEE BLUE SHEET.

| ITEM | QTY | PART NAME | MATERIAL |
|---|---|---|---|
| 1 | 1 | ROD TROLLEY | SEE DRAWING |
| 2 | 1 | ROD TROLLEY FOLLOWER | SEE DRAWING |
| 3 | 4 | EHI X2 SERIES 750KG 150mm POLYURETHANE FIXED CASTOR X23AZ95K150 | |
| 4 | 4 | EHI X2 SERIES 750KG 150mm POLYURETHANE SWIVEL BRAKE CASTOR X22TZ95K150 | |
| 5 | 32 | BOLT - HEX HEAD, M8 x 25 | |
| 6 | 32 | NUT - HEX, M8 | |
| 7 | 32 | WASHER - FLAT, M8 | |
| 8 | 2 | CERTIFICATION PLATE | ALLOY STEEL (SS) |
| 9 | 2 | STICKER - WLL 4 TONNES | PP FILM |

ORDER 2 x HARDCHROME SPECIFIC
CERTIFICATION PLATES 180MMX100MM

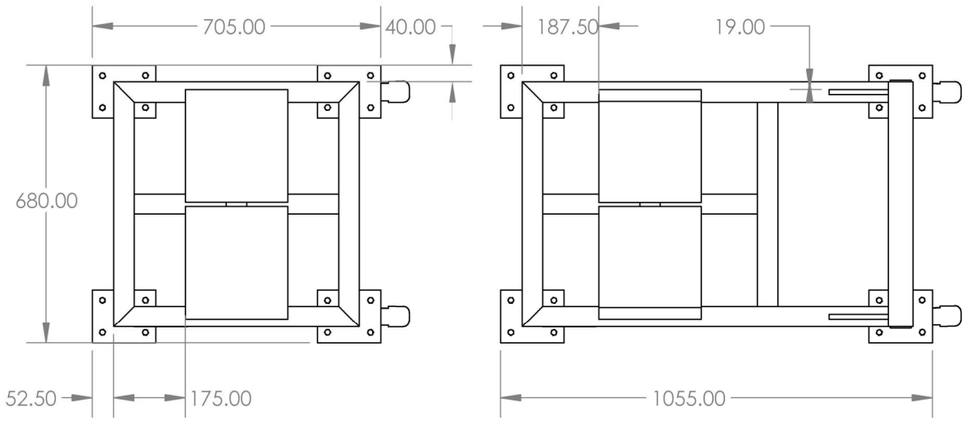


**CERTIFICATION**

ROD TROLLEY DOLLY SET
WLL 2T
TARE WEIGHT: 160 KG
CERTIFICATION NO: 14874
DRAWING NO: WELD-16778
SERIAL NO: TBA
COMPLIANCE DATE: 02/2026
MANUFACTURE DATE: TBA

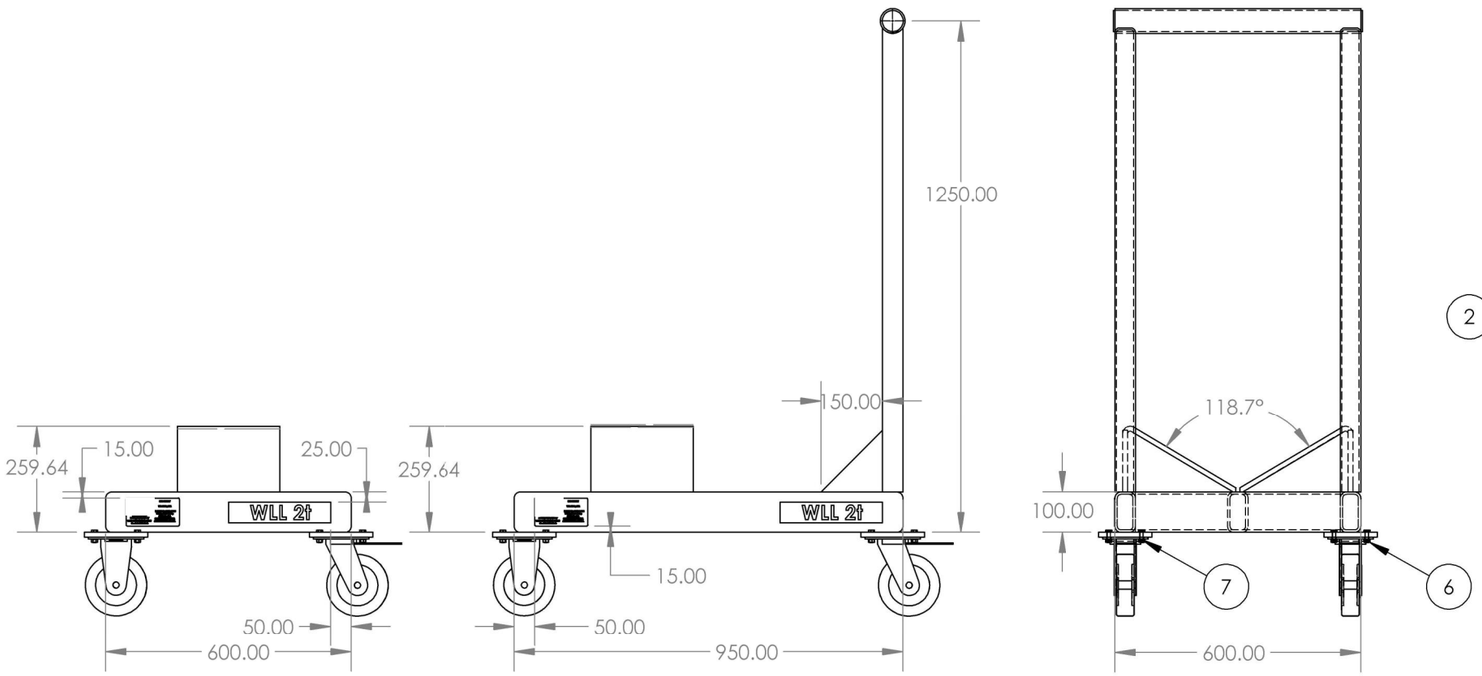


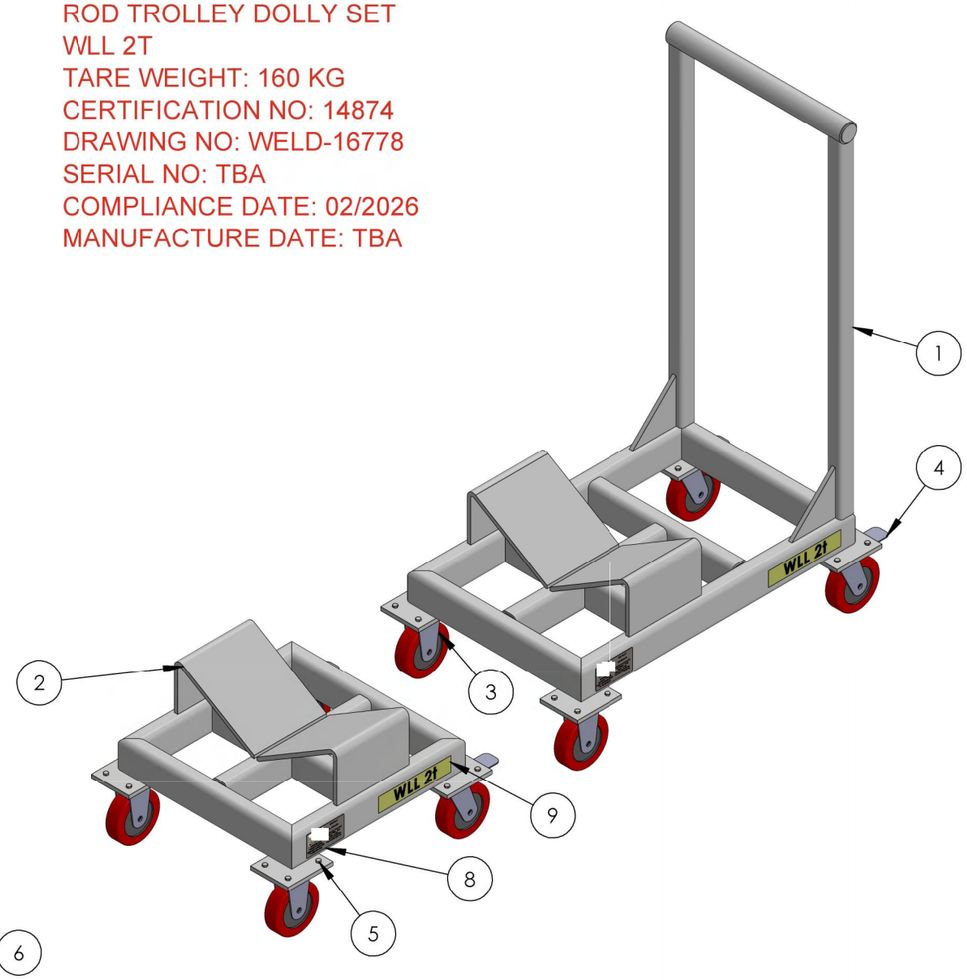


PLASMA PROGRAM:
ROD TROLLEY/DOLLY SET - 12MM -

| | NAME | DATE |
|---|---|---|
| DRAWN | DS | 19/02/2026 |
| CHK'D | | |
| APPV'D | | |

UNLESS OTHERWISE SPECIFIED DIMENSIONS ARE IN MILLIMETERS. TOLERANCES: LINEAR: 0.5mm, ANGULAR: 0.5°

DRAFTING STANDARD AS1100
DEBURR AND BREAK SHARP EDGES
MASS: 159.9KGs

TITLE: ROD TROLLEY OR DOLLY SET -

3RD ANGLE PROJECTION:
SCALE:1:50
DO NOT SCALE DRAWING
A3
SHEET 1 OF 6
REVISION A

FILE LOCATION: W:\ \ROD TROLLEY DOLLY SET \5. SW\

NOTES
1. TARE: 36KG
2. ALL STEELWORK TO BE IN ACCORDANCE WITH AS3678 AND AS3679 U.O.S.
3. PLATEWORK TO BE GRADE 250. CLOSED HOLLOW SECTIONS TO BE GRADE 350.
4. ALL STEELWORK AND PLATEWORK FABRICATION TO COMPLY WITH AS 4100-1998
5. ALL WELDING TO AS1554 - CATEGORY SP U.O.S.
6. ALL WELDS TO BE CONTINOUS FILLET WELDS U.O.S.
7. ALL WELDS TO BE EQUAL TO MINIMUM THICKNESS OF PLATE U.O.S.
8. ALL SHARP EDGES TO BE REMOVED.
9. FINISH: SEE BLUE SHEET.

| ITEM | QTY | PART NAME | MATERIAL | THK. |
|---|---|---|---|---|
| 1 | 1 | MAIN BODY PLATE | AS NZS 3678 GR250 | 2 |
| 2 | 1 | BODY PLATE RH | AS NZS 3678 GR250 | 2 |
| 3 | 1 | BODY PLATE LH | AS NZS 3678 GR250 | 2 |
| 4 | 1 | DOOR | 316 STAINLESS STEEL | 2 |
| 5 | 1 | MTG PLATE 1 | AS NZS 3678 GR250 | 5 |
| 6 | 1 | MTG PLATE 2 | AS NZS 3678 GR250 | 5 |
| 7 | 2 | PINTLE HINGE AD81 -PART 1 | | |
| 8 | 2 | PINTLE HINGE AD81 -PART 2 | | |
| 9 | 1 | DROP T LOCK 3 WAY | | |
| 10 | 1 | PINCH WELD SIDE BULB | | |
| 11 | 2 | LIGHT GAUGE CHAIN | 3mm GALVANIZED | |

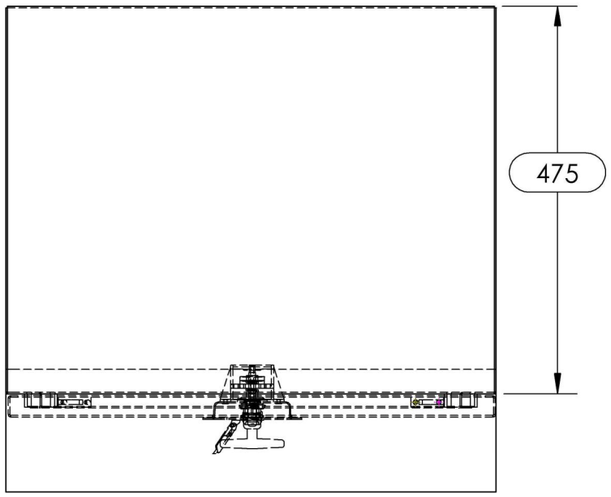


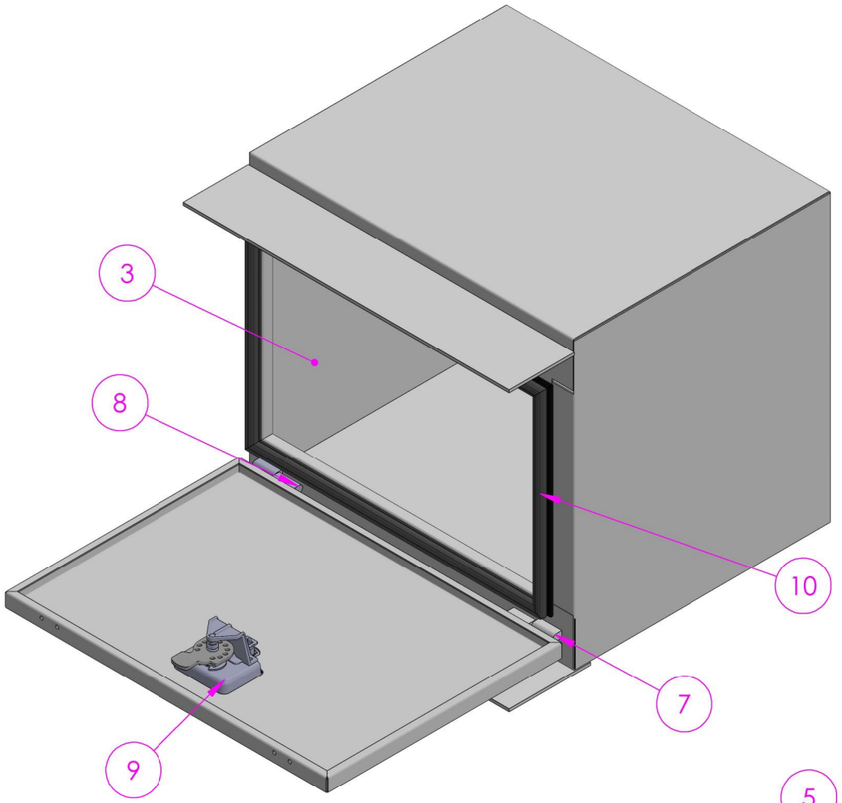


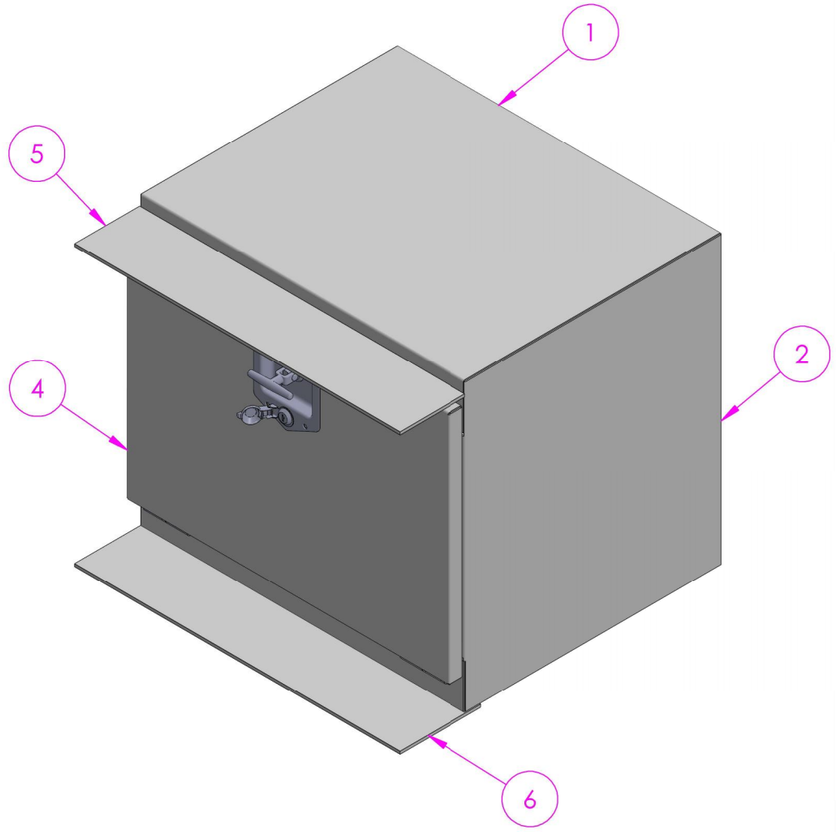


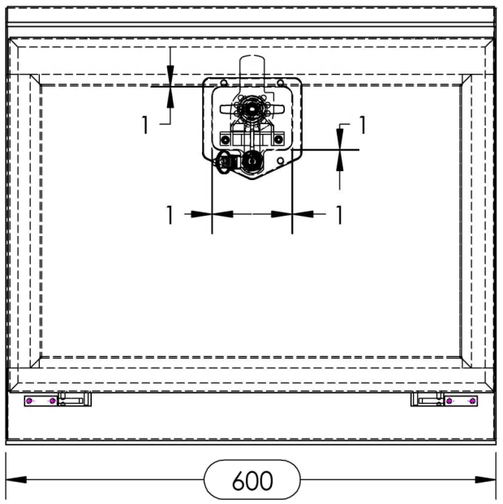


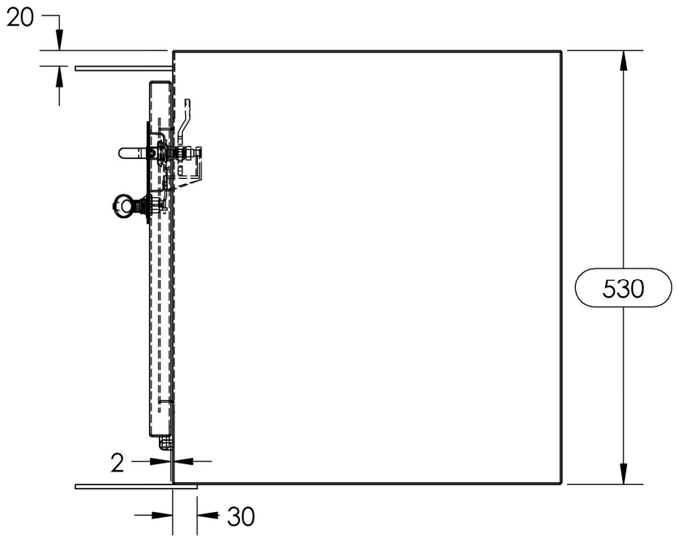


| | NAME | DATE |
|---|---|---|
| DRAWN | DS | 21/05/2026 |
| CHK'D | | |
| APPV'D | | |

UNLESS OTHERWISE SPECIFIED DIMENSIONS ARE IN MILLIMETERS. TOLERANCES: LINEAR: 0.5mm, ANGULAR: 0.5°

DRAFTING STANDARD AS1100
DEBURR AND BREAK SHARP EDGES
MASS: 36kg

TITLE: 2mm STEEL TOOLBOX -

3RD ANGLE PROJECTION:

SCALE:1:10
DO NOT SCALE DRAWING

A3

SHEET 1 OF 3

REVISION A

FILE LOCATION: W:\ \JASS CARTAGE & CONTRACTING\2MM STEEL TOOLBOX L600 X D475 X H530MM CW 316 SS DOOR WITH CHAINS - \5. SW\

**NOTES**

1. TARE: 31.4 KG
2. ALL ALUMINIUM TO BE IN ACCORDANCE WITH AS/NZ 1734, AS/NZ 1866 AND AS/NZ 1865 U.N.O
3. ALL ALUMINIUM AND PLATEWORK FABRICATION TO COMPLY WITH AS/NZ 1734-1997.
4. ALL WELDING TO AS/NZ 1665 - 2004 - CATEGORY SP UNO
5. ALL WELDS TO BE EQUAL TO MINIMUM THICKNESS OF PLATE.
6. ALL WELD TO BE CONTINOUS FILLET WELDS U.N.O
7. ALL SHARP EDGES TO BE REMOVED.
8. FINISH: SEE BLUE SHEET

| ITEM | QTY | PART NAME | MATERIAL | THK. | SOURCE |
|---|---|---|---|---|---|
| 1 | 1 | FRAME WELDMENT | ALUMINIUM | | IN-HOUSE |
| 2 | 2 | CHS 40X3 MALE SECTION | ALUMINIUM | | IN-HOUSE |
| 3 | 2 | BASE PLATE , 10PL | ALUMINIUM | 10 | IN-HOUSE |
| 4 | 1 | TOP NOSING PLATE, 90° BEND | ALUMINIUM | 1 | PURCHASED |
| 5 | 5 | STEPS ASSEMBLY, YELLOW ABBRASIVE NOSING, 110° BEND | ALUMINIUM | | PURCHASED |
| 6 | 2 | 125mm POLY SPRING LOADED SWIVEL CASTOR WITH BRAKE | SUPPLIER SPECIFICATION | | PURCHASED |
| 7 | 8 | BOLT M12 X 35 | ZP | | PURCHASED |
| 8 | 8 | PLAIN WASHER, M12 | ZP | | PURCHASED |
| 9 | 8 | NUT, M12 | ZP | | PURCHASED |
| 10 | 1 | STICKER WLL 120 KG | - | | |

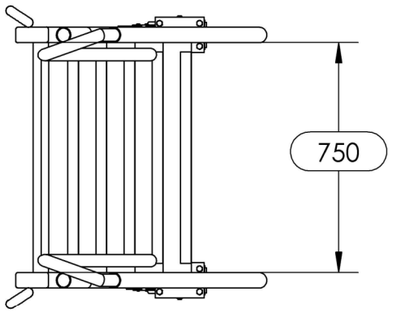


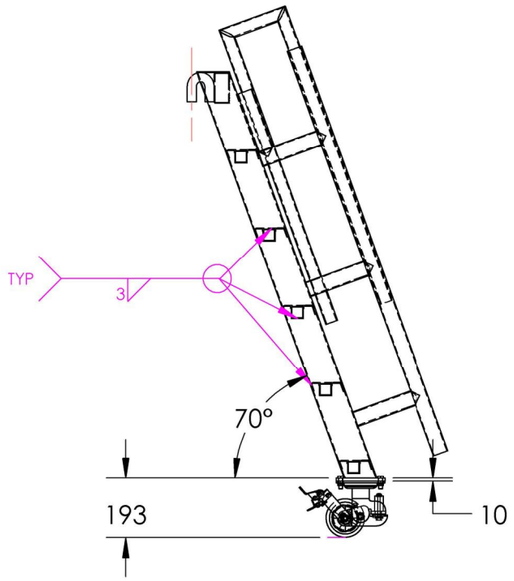


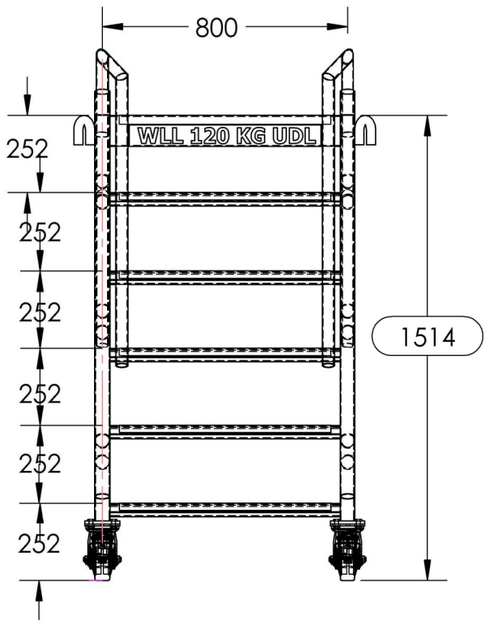


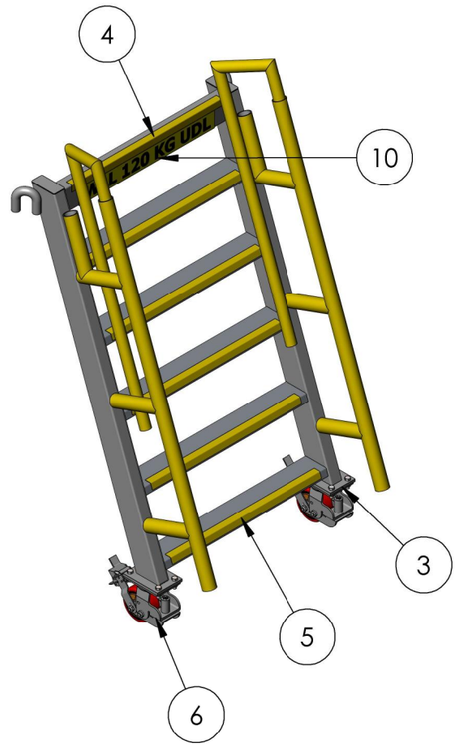


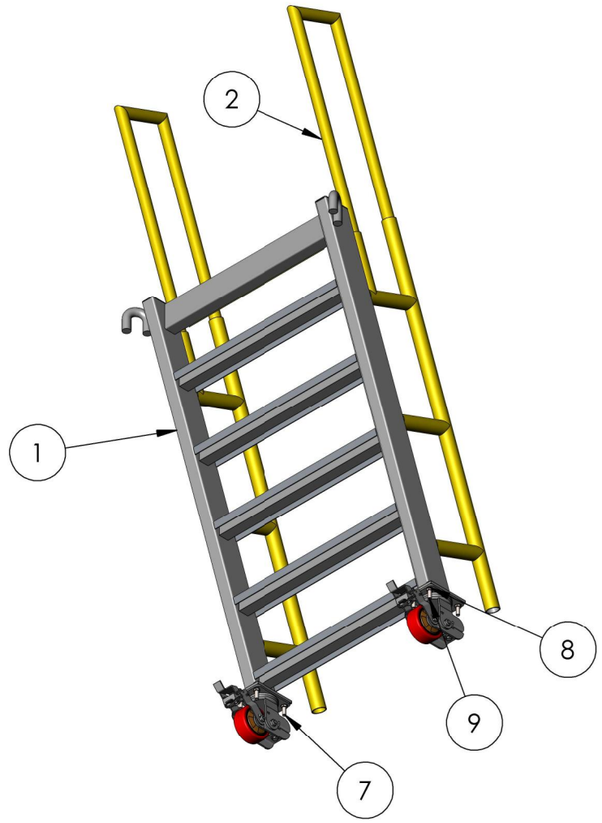


***PLASMA PROGRAM:***

PENSKIE PIT ALI STEP LADDER CW WITH TELESCOPIC GRABRAILS - 1MM - ALUMINIUM -
PENSKIE PIT ALI STEP LADDER CW WITH TELESCOPIC GRABRAILS - 10MM - ALUMINIUM

| | NAME | DATE |
|---|---|---|
| DRAWN | DS | 3/07/2026 |
| CHK'D | | |
| APPV'D | | |

UNLESS OTHERWISE SPECIFIED DIMENSIONS ARE IN MILLIMETERS. TOLERANCES: LINEAR: 0.5mm, ANGULAR: 0.5°

DRAFTING STANDARD AS1100

DEBURR AND BREAK SHARP EDGES

MASS: 31kg

TITLE: PENSKE PIT ALUMINIUM STEP LADDER 1514MM HIGH C/W TELESCOPIC GRABRAILS -

3RD ANGLE PROJECTION:

SCALE:1:20

DO NOT SCALE DRAWING

A3

SHEET 1 OF 5

REVISION **A**

**NOTES**

1. TARE: 97.0 KG
2. ALL STEELWORK TO BE IN ACCORDANCE WITH AS3678 AND AS3679 U.N.O
3. PLATEWORK TO BE GRADE 250. CLOSED HOLLOW SECTIONS TO BE GRADE 350.
4. ALL STEELWORK AND PLATEWORK FABRICATION TO COMPLY WITH AS 4100-1998
5. ALL WELDING TO AS1554 - CATEGORY SP UNO
6. ALL WELDS TO BE 5mm CONTINOUS FILLET WELDS U.N.O
7. FINISH: SEE BLUE SHEET

| ITEM | QTY | PART NAME | MATERIAL | LENGTH | THK |
|---|---|---|---|---|---|
| 1 | 1 | BODY PRESS | AS NZS 3678 GR250 | | 3 |
| 2 | 1 | TOP PRESS | AS NZS 3678 GR250 | 952 | 3 |
| 3 | 1 | BOTTOM PRESS | AS NZS 3678 GR250 | 952 | 3 |
| 4 | 2 | 125mm SWIVEL AND BRAKE CASTOR | - | | |
| 5 | 2 | 125mm FIXED CASTOR | - | | |
| 6 | 1 | DOOR PRESS | AS NZS 3678 GR250 | 945 | 2 |
| 7 | 2 | 80mm WELD ON BULLET HINGE | STEEL | | |
| 8 | 2 | 80mm WELD ON BULLET HINGE FEMALE | STEEL | | |
| 9 | 1 | DOOR CATCH | AS NZS 3678 GR250 | 47 | 5 |
| 10 | 1 | PAD BOLT 150mm 12mm PART1 | ZP | | |
| 11 | 1 | HANDLE | AS NZS 3678 GR250 | 1073 | |
| 12 | 1 | MID-SHELF | AS NZS 3678 GR250 | 952 | 2 |
| 13 | 16 | BOLT - HEX HEAD, M8 X 20 | ZP | | |
| 14 | 16 | WASHER- FLAT , M8 | ZP | | |
| 15 | 16 | NUT - NYLOC, M8 | ZP | | |
| 16 | 1 | CUT-OUT COVER | STAINLESS STEEL | | 1.6 |
| 17 | 4 | BLIND RIVET | STAINLESS STEEL | | |

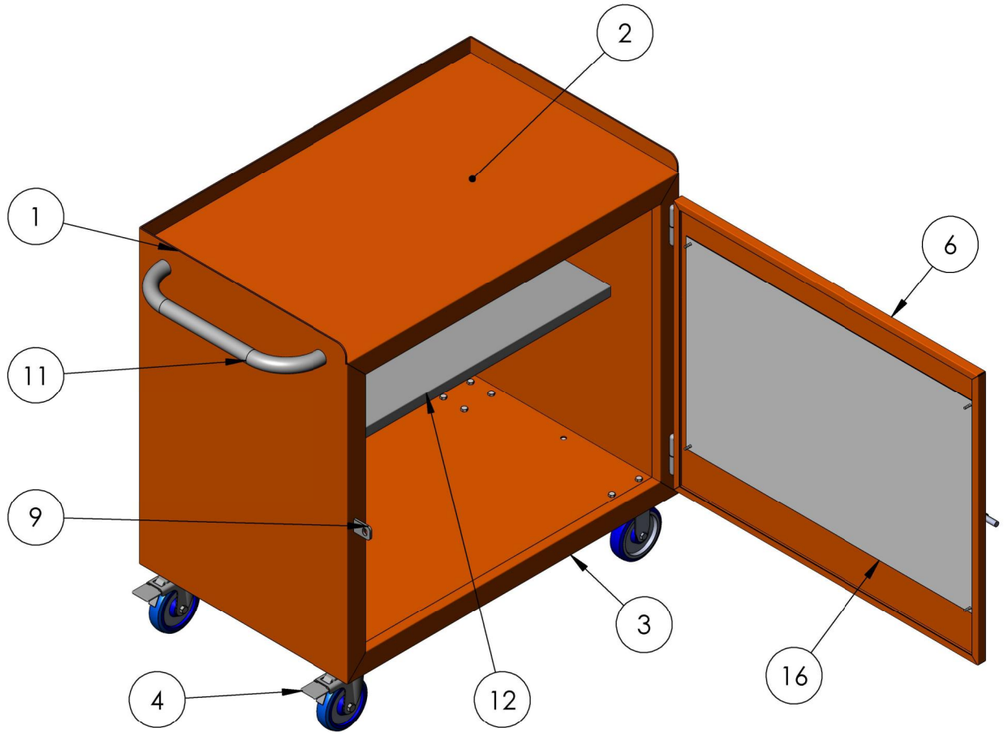


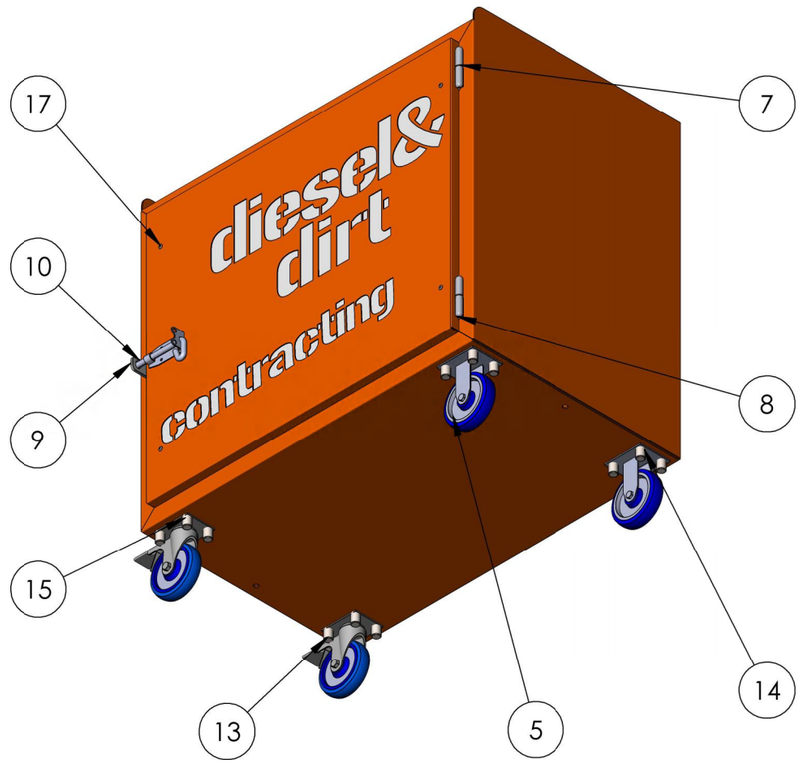


**PLASMA PROGRAMS:**
TOOL TROLLEY NO SHELF-1.6mm
TOOL TROLLEY NO SHELF-3mm-
TOOL TROLLEY STD SINGLE DOOR-5mm-

| | NAME | DATE |
|---|---|---|
| DRAWN | DS | 5/03/2026 |
| CHK'D | | |
| APPV'D | | |

DEBURR AND BREAK SHARP EDGES

DRAFTING STANDARD AS1100

UNLESS OTHERWISE SPECIFIED DIMENSIONS ARE IN MILLIMETERS. TOLERANCES: LINEAR: 0.5mm, ANGULAR: 0.5°

MASS: 97.0 kg

TITLE: TOOL TROLLEY C/W SHELF -

3RD ANGLE PROJECTION:

SCALE:1:20

DO NOT SCALE DRAWING

A3

SHEET 1 OF 4

REVISION B

**NOTES**

1. TARE: 78kg
2. ALL STEELWORK TO BE IN ACCORDANCE WITH AS3678 AND AS3679 U.O.S.
3. PLATEWORK TO BE GRADE 250. CLOSED HOLLOW SECTIONS TO BE GRADE 350.
4. ALL STEELWORK AND PLATEWORK FABRICATION TO COMPLY WITH AS 4100-1998
5. ALL WELDING TO AS1554 - CATEGORY SP U.O.S.
6. ALL WELDS TO BE CONTINOUS FILLET WELDS U.O.S.
7. ALL WELDS TO BE EQUAL TO MINIMUM THICKNESS OF PLATE U.O.S.
8. ALL SHARP EDGES TO BE REMOVED.
9. FINISH: SEE BLUE SHEET.

| ITEM NO. | QTY. | DESCRIPTION | MATERIAL | LENGTH | THK. | MASS (KG) |
|---|---|---|---|---|---|---|
| 1 | 1 | BOTTOM TRAY 3PL | AS NZS 3678 GR250 | 1295 | 3 | 26 |
| 2 | 1 | TOP TRAY 3PL | AS NZS 3678 GR250 | 1295 | 3 | 26 |
| 3 | 1 | EXTENSION TRAY 3PL | AS NZS 3678 GR250 | 790 | 3 | 4 |
| 4 | 1 | 26.9X4.0 CHS | AS NZS 3678 GR250 | 1237 | | 3 |
| 5 | 4 | 35X35X3.0 SHS | AS NZS 3678 GR350 | 744 | | 2 |
| 6 | 2 | CASTOR 125MM SWIVEL BRAKE | AS NZS 3678 GR250 | | | 3 |
| 7 | 2 | CASTOR 125MM FIXED | AS NZS 3678 GR250 | | | 3 |
| 8 | 32 | PLAIN WASHER M8 | AS NZS 3678 GR250 | | | 0.001829 |
| 9 | 16 | HEX BOLT M8 X 20 | AS NZS 3678 GR250 | | | 0.013736 |
| 10 | 16 | HEX NUT M8 | AS NZS 3678 GR250 | | | 0.00674 |

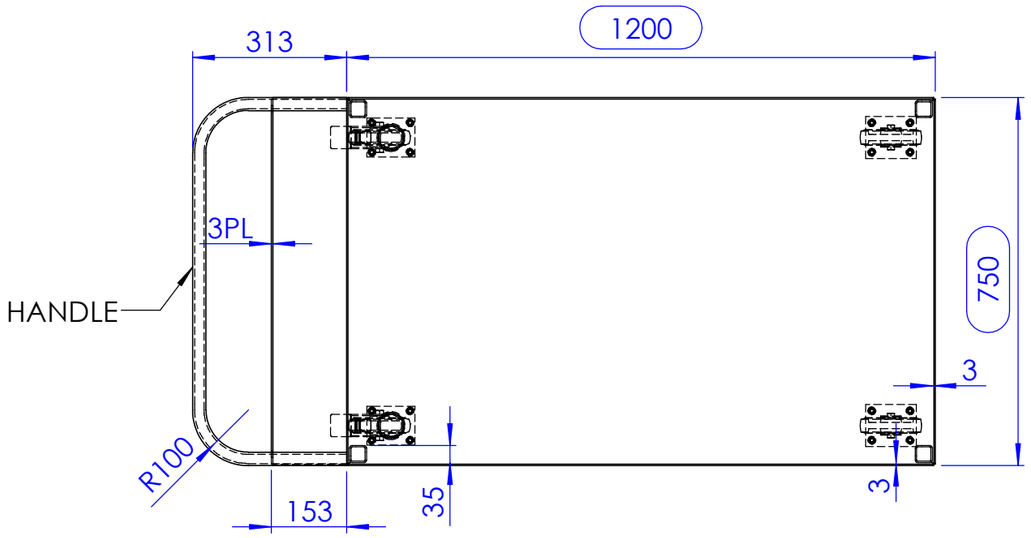


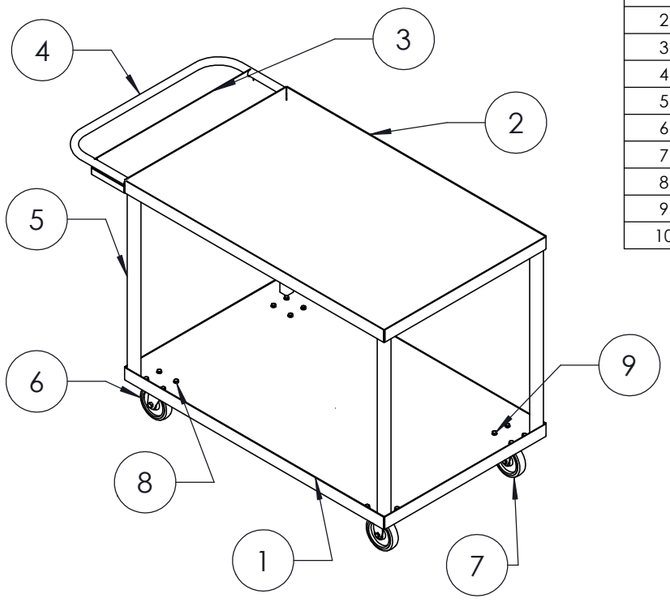


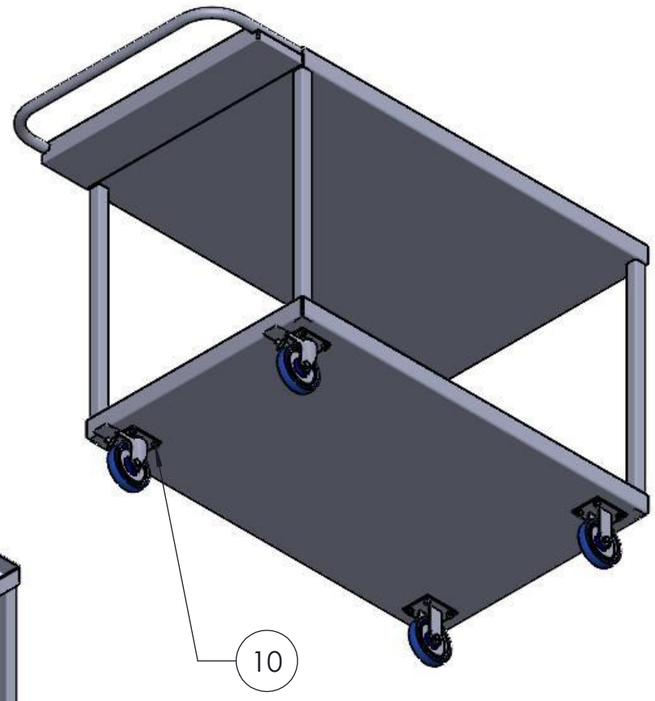


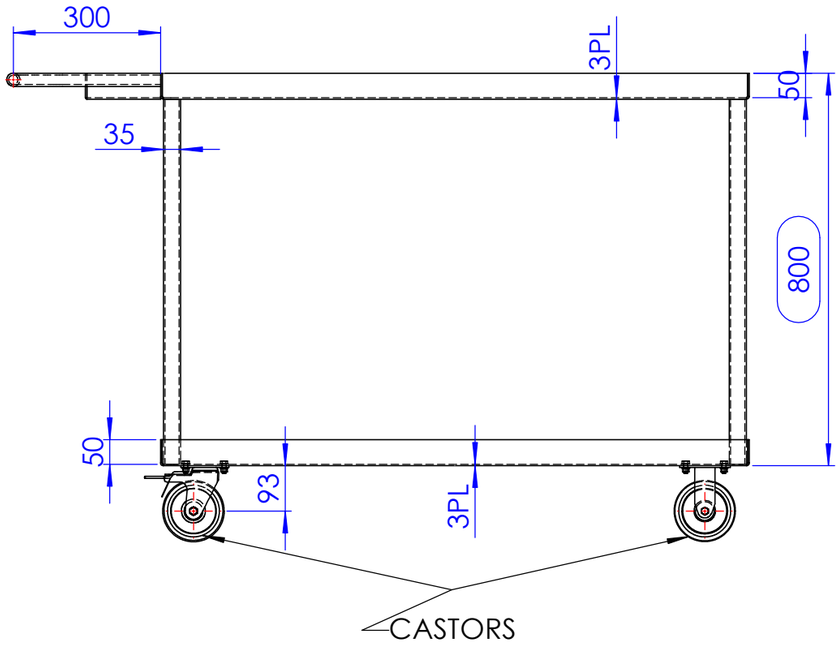


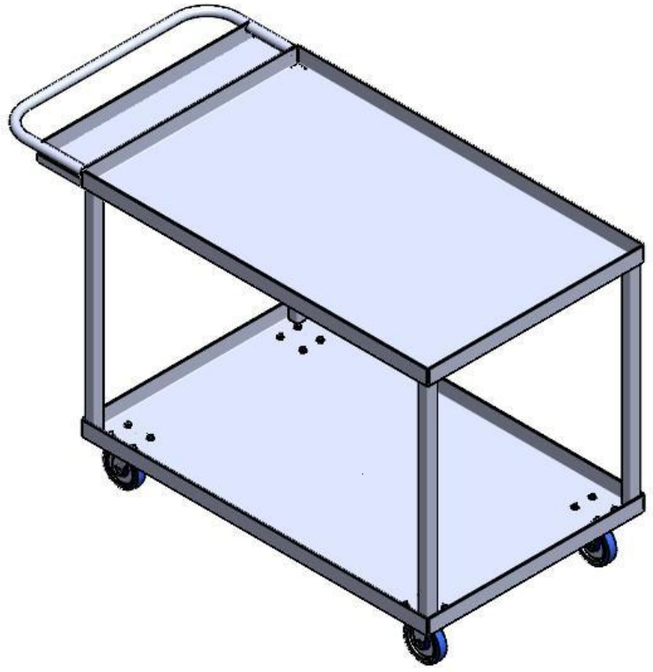

**PLASMA PROGRAM:**
Custom Trolley Open Type - Painted White - 3mm -

| | NAME | DATE |
|---|---|---|
| DRAWN | DS | 22/10/2025 |
| CHK'D | | |
| APPV'D | | |

UNLESS OTHERWISE SPECIFIED DIMENSIONS ARE IN MILLIMETERS. TOLERANCES: LINEAR: 0.5mm, ANGULAR: 0.5°

DRAFTING STANDARD AS1100
DEBURR AND BREAK SHARP EDGES
MASS: 78kg

TITLE: GOLDFIELDS PART TROLLEY

3RD ANGLE PROJECTION:

SCALE:1:20
DO NOT SCALE DRAWING

A3

SHEET 1 OF 4

REVISION **A**

FILE LOCATION: W:\ \TROLLEY OPEN TYPE (APPROX. H800 X D750 X L1200MM + HANDLE) - 5. SW\

# EXAMPLE OF GENERAL ASSEMBLY WITH WELDMENTS APPLICATION IN SOLIDWORKS

| ASSEMBLY NO. | DESCRIPTION | QTY. |
|---|---|---|
| LG-2 | LOWER GROUND BALUSTRADE 2 | 1 |
| LG-3 | LOWER GROUND BALUSTRADE 3 | 1 |
| LG-4 | LOWER GROUND BALUSTRADE 4 | 1 |
| LG-5 | LOWER GROUND BALUSTRADE 5 | 1 |
| LG-6 | LOWER GROUND BALUSTRADE 6 | 1 |
| LG-7 | LOWER GROUND BALUSTRADE 7 | 1 |
| LG-8 | LOWER GROUND BALUSTRADE 8 | 1 |
| LG-9 | LOWER GROUND BALUSTRADE 9 | 1 |

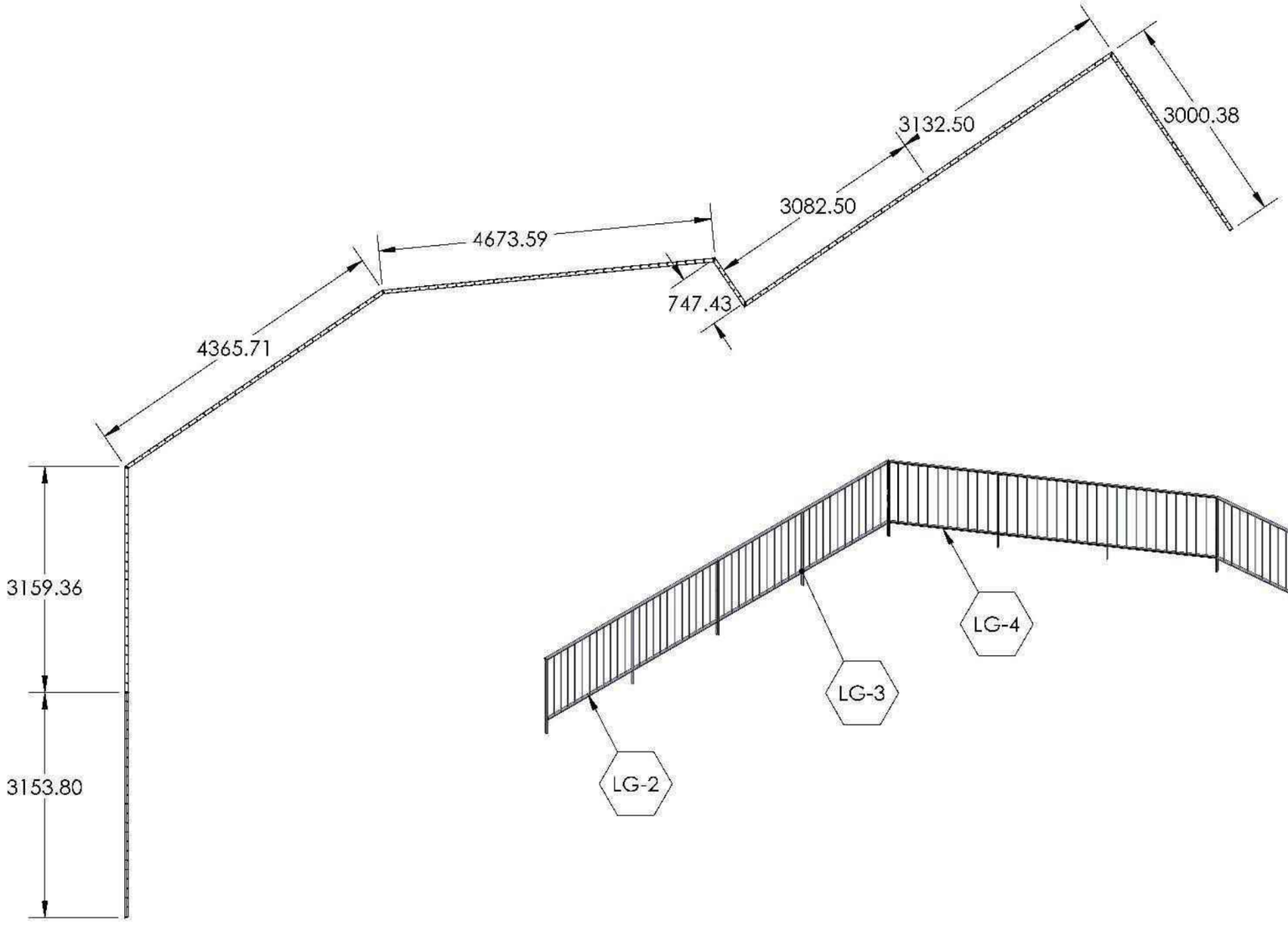


**TOP VIEW**
SCALE 1 : 70

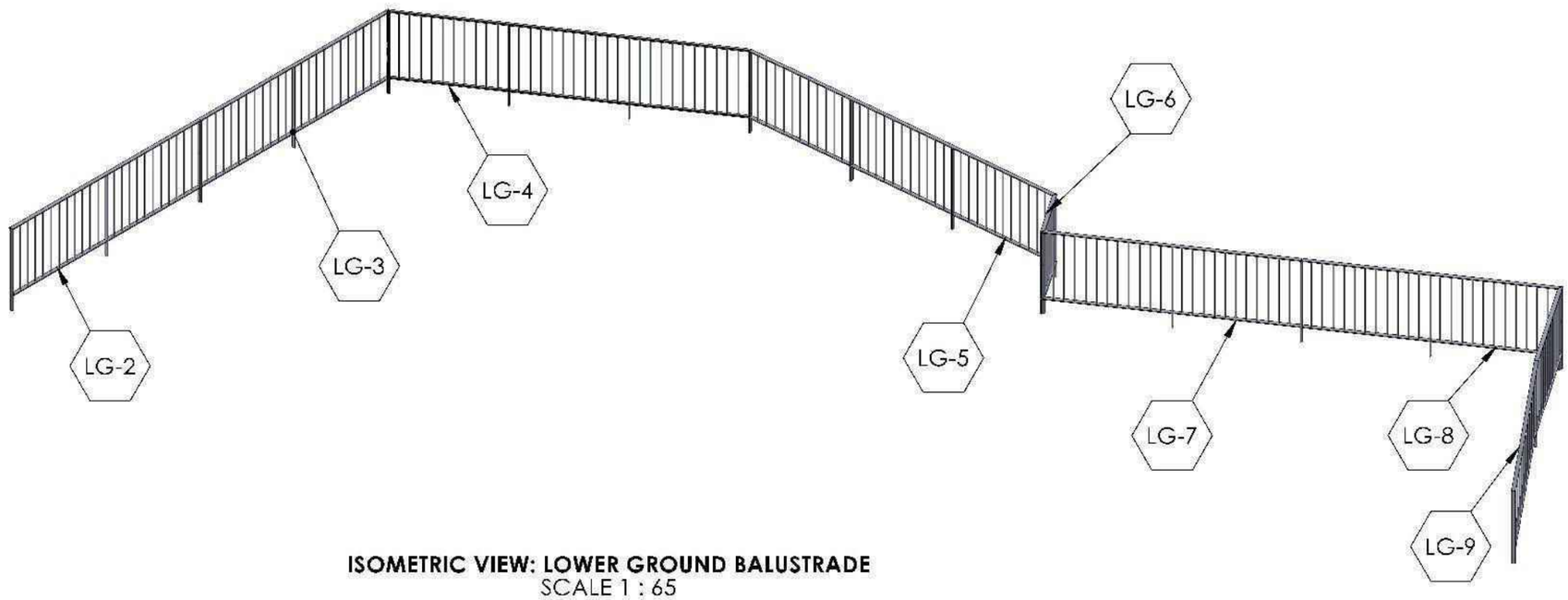


**ISOMETRIC VIEW: LOWER GROUND BALUSTRADE**
SCALE 1 : 65

DESCRIPTION:
**GENERAL ASSEMBLY**
**LOWER GROUND BALUSTRADE**

ITEM NUMBER:
LG-2, LG-3, LG-4, LG-5, LG-6, LG-7, LG-8, LG-9

STAGE:
ISSUED FOR MANUFACTURING APPROVAL

JOB NO:

DATE:
03/03/2025

# EXAMPLE OF SUB-ASSEMBLY DRAWING INVOLVING WELDMENTS

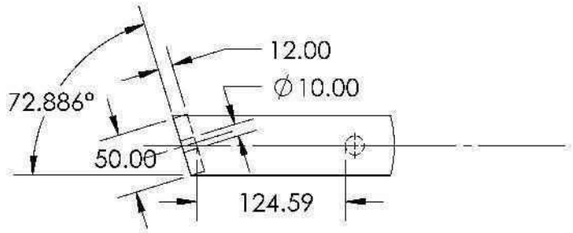


**DETAIL A**
SCALE 1 : 5

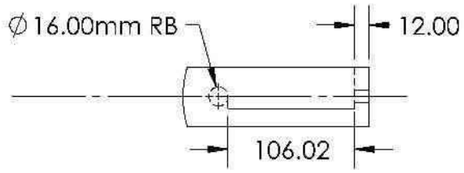


**DETAIL B**
SCALE 1 : 5

| ITEM NO. | QTY. | DESCRIPTION | LENGTH |
|---|---|---|---|
| 1 | 1 | 15 x 12mm FB (EX4032) | 3153.8 |
| 2 | 2 | 15 x 12mm FB (EX4032) | 1173 |
| 3 | 22 | Ø16mm RB (EX6002) | 946 |
| 4 | 1 | 15 x 12mm FB (EX4032) | 1576.170332 |
| 5 | 1 | 15 x 12mm FB (EX4032) | 1541 |
| 6 | 1 | 15 x 12mm FB (EX4032) | 1173 |

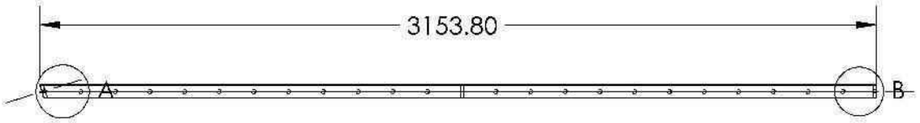


**TOP VIEW**
SCALE 1 : 22.5

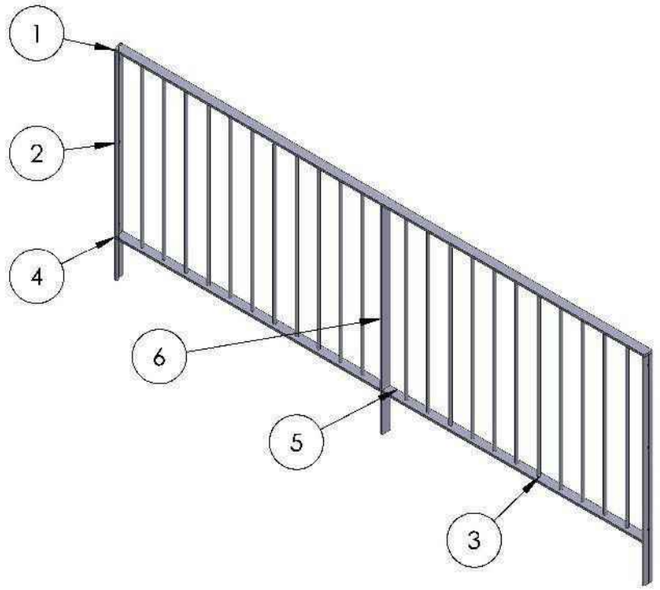


**ISOMETRIC VIEW: LG-2 BALUSTRADE**
SCALE 1 : 25

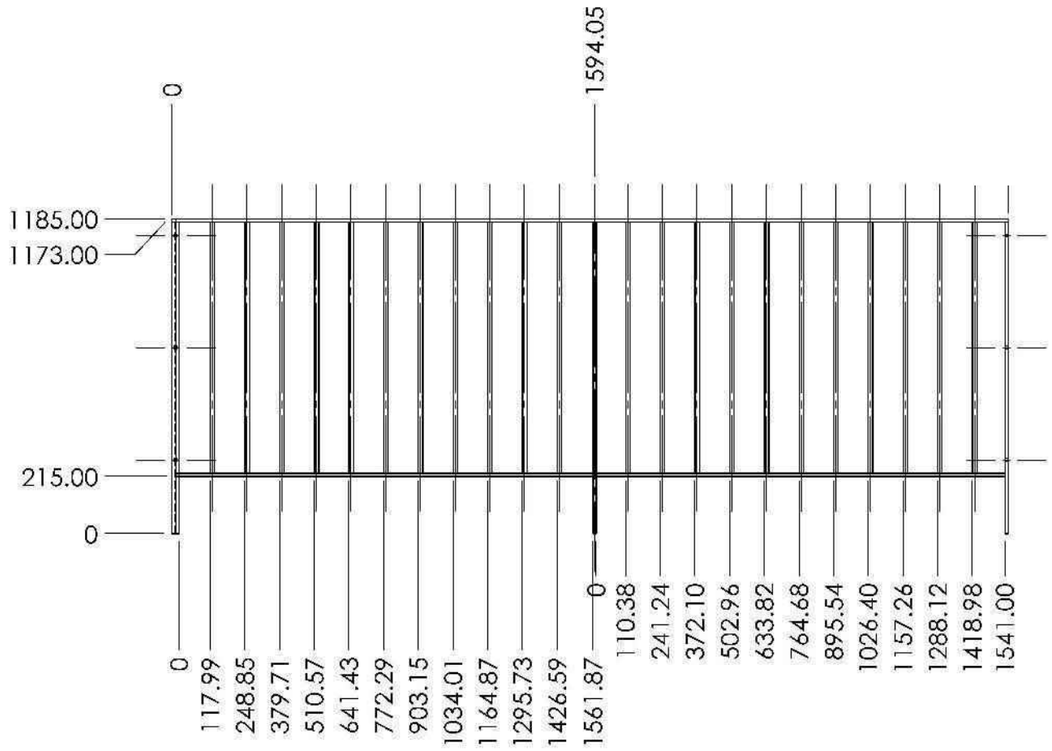


**ELEVATION VIEW: LG-2 BALUSTRADE**
SCALE 1 : 22.5

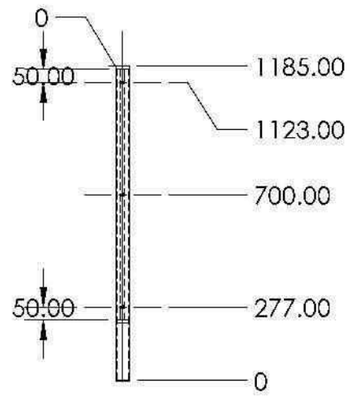


**END VIEW**
SCALE 1 : 22.5

| | | |
|---|---|---|
| DESCRIPTION: LG-2 DETAIL LOWER GROUND BALUSTRADE | | |
| ITEM NUMBER: LG-2 | STAGE: ISSUED FOR MANUFACTURING APPROVAL | |
| JOB NO: 03/03/2025 | DATE: 03/03/2025 | WEBSITE: |

# AUTOCAD

## 3D MODELING AND TECHNICAL DRAWINGS

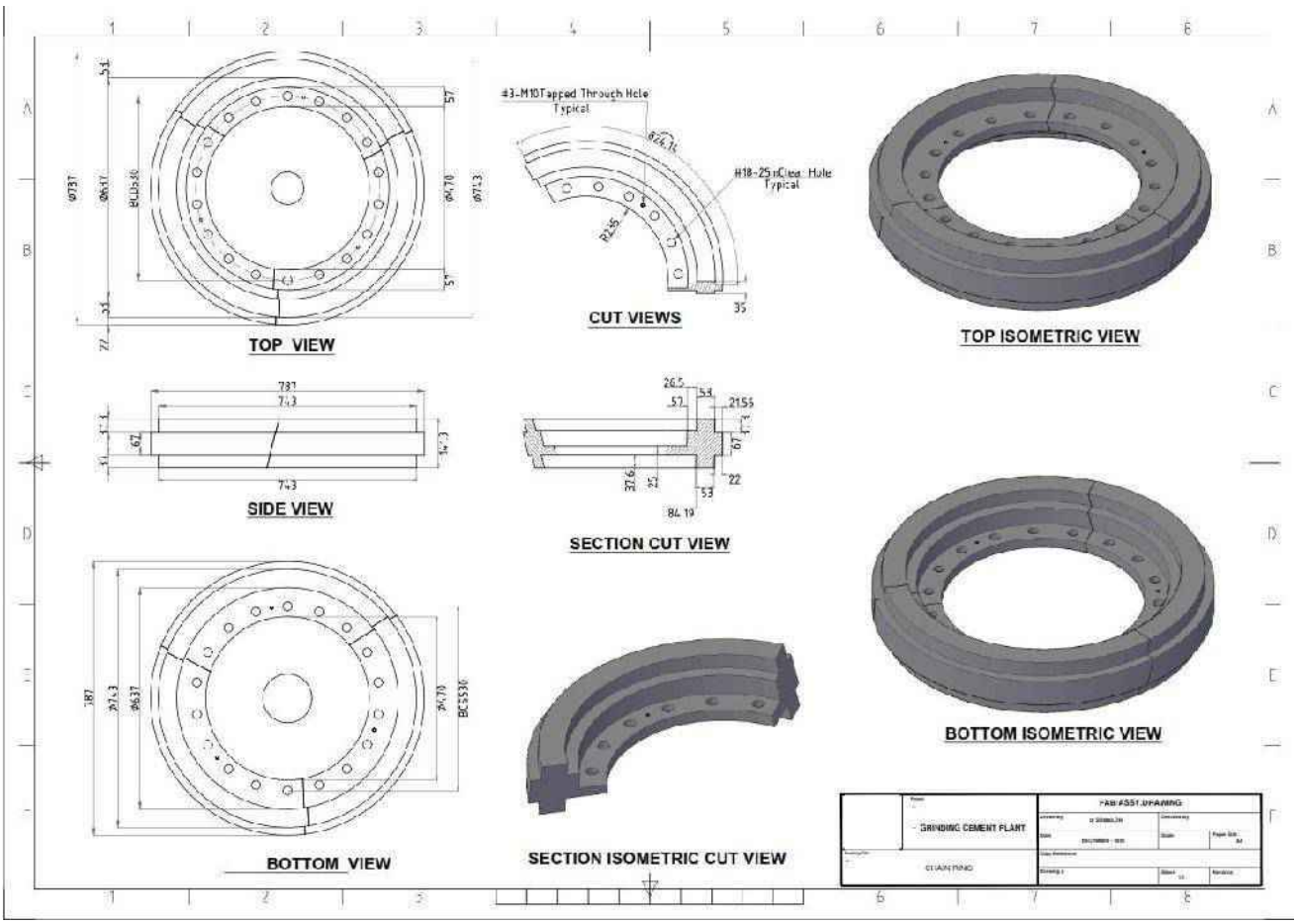
TOP VIEW
CUT VIEWS
TOP ISOMETRIC VIEW
SIDE VIEW
SECTION CUT VIEW
BOTTOM ISOMETRIC VIEW
BOTTOM VIEW
SECTION ISOMETRIC CUT VIEW
GRINDING CEMENT PLANT

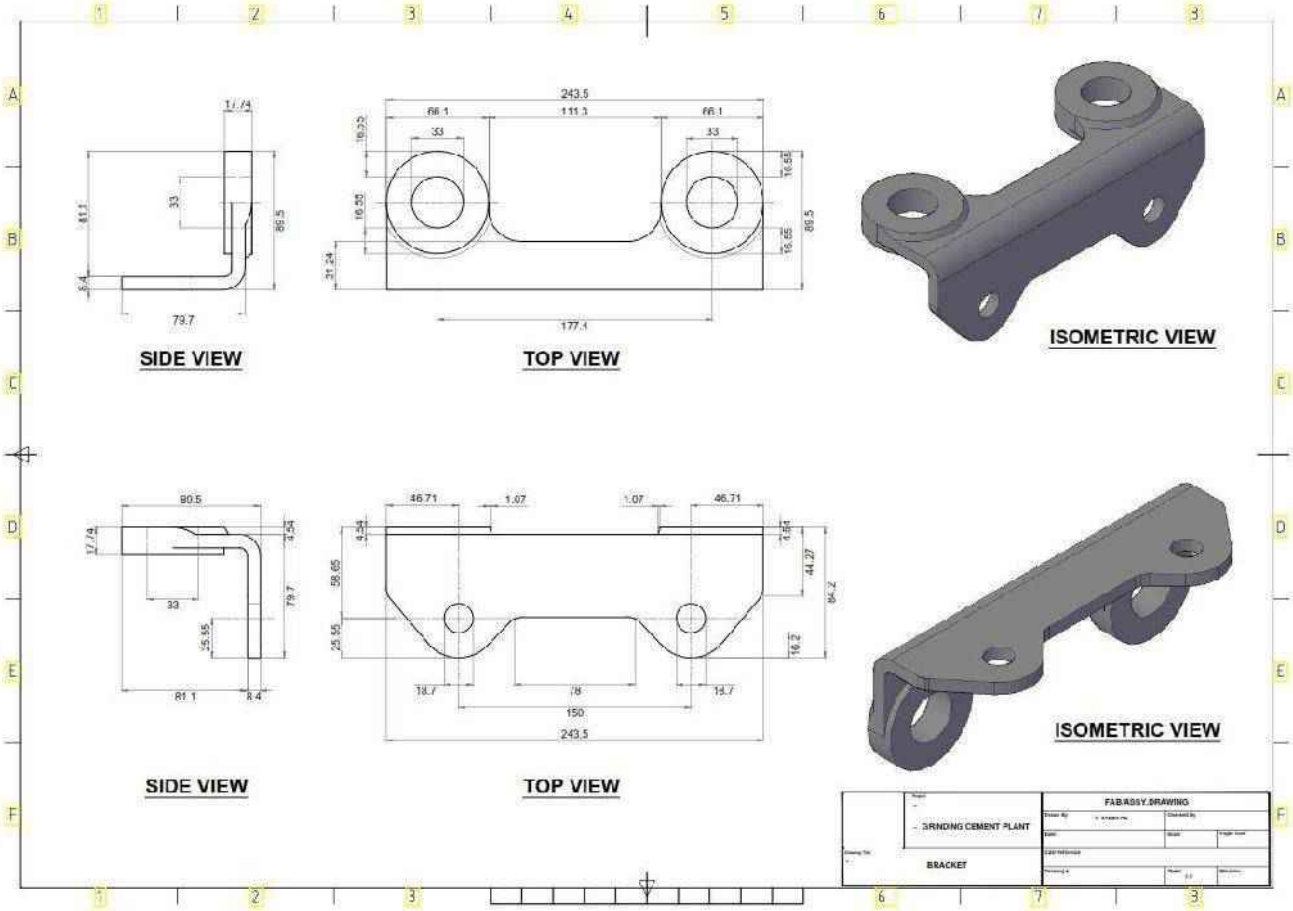
SIDE VIEW
TOP VIEW
ISOMETRIC VIEW
SIDE VIEW
TOP VIEW
ISOMETRIC VIEW
FAB/ASSY.DRAWING
GRINDING CEMENT PLANT
BRACKET

AU04 FL02

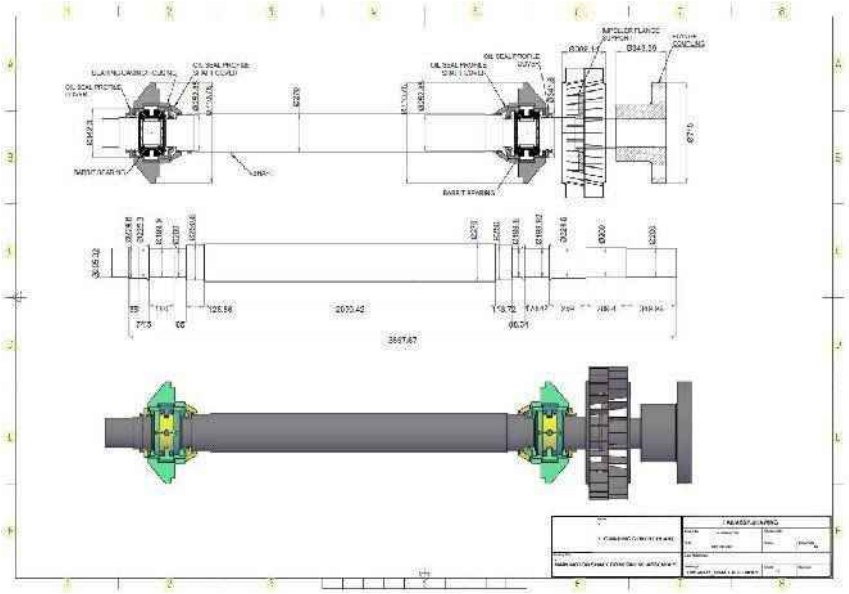

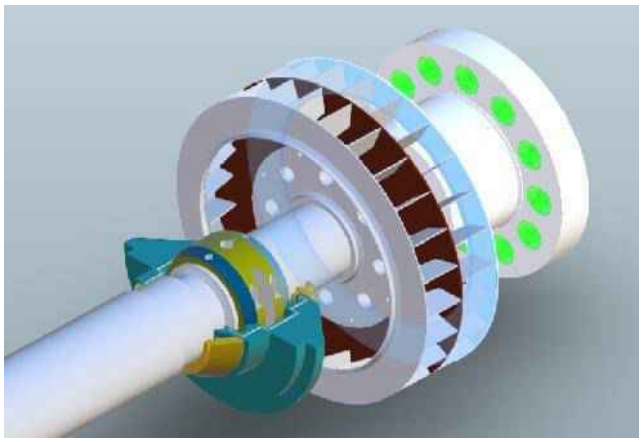

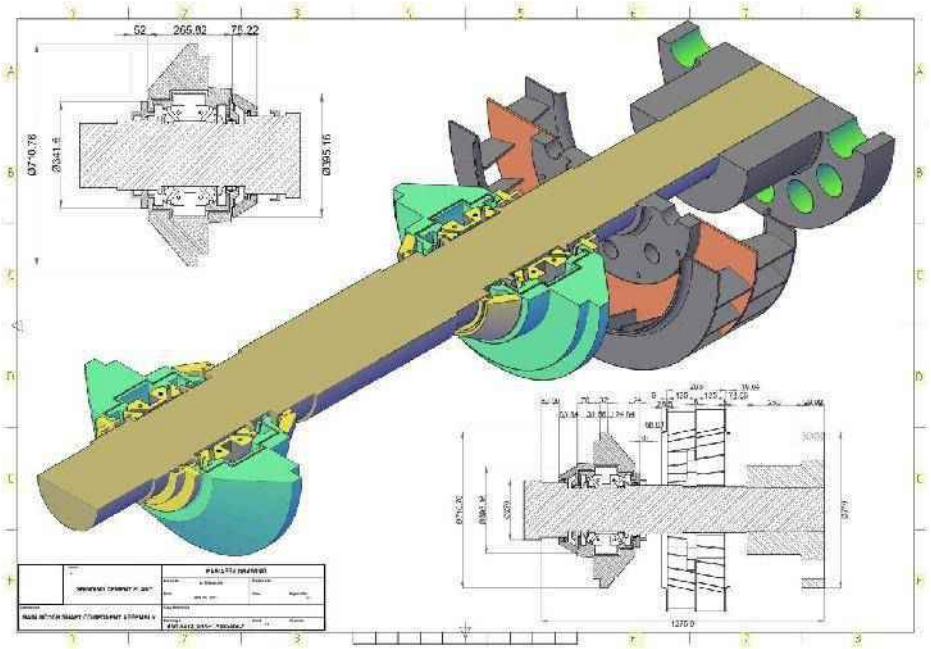

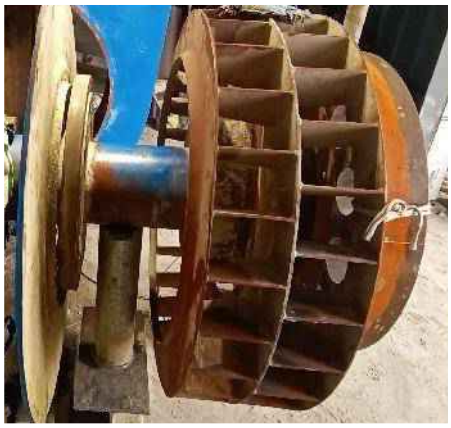

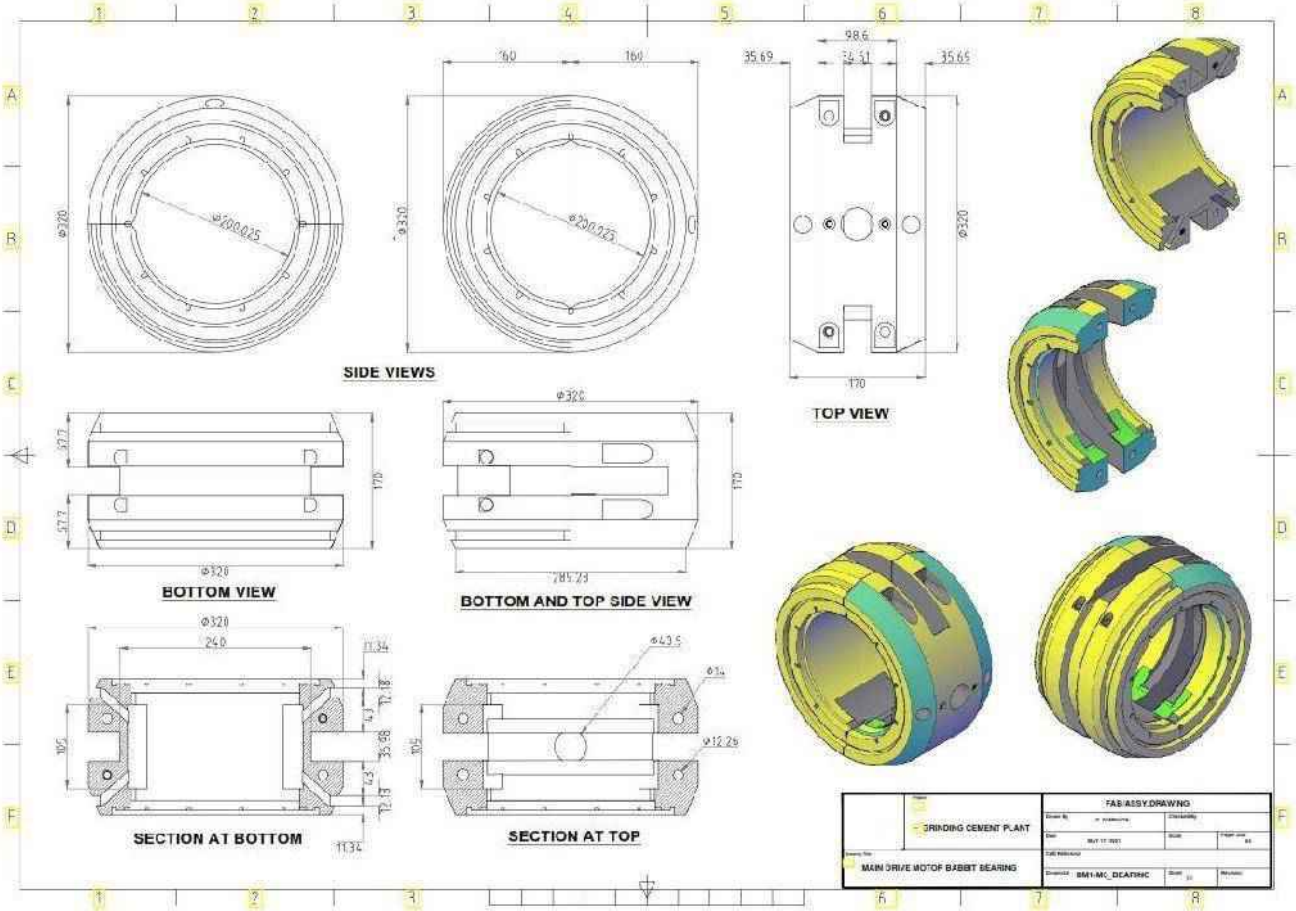
SIDE VIEWS
TOP VIEW
BOTTOM VIEW
BOTTOM AND TOP SIDE VIEW
SECTION AT BOTTOM
SECTION AT TOP
FAB/ASSY.DRAWING
GRINDING CEMENT PLANT
MAIN DRIVE MOTOF BABBIT BEARING

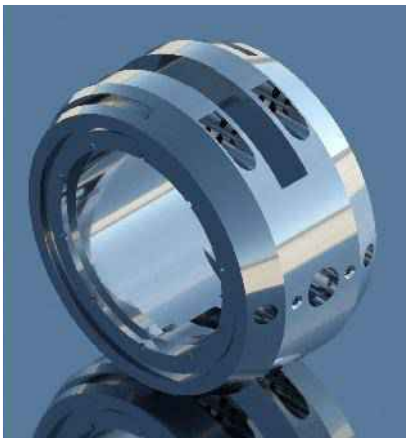

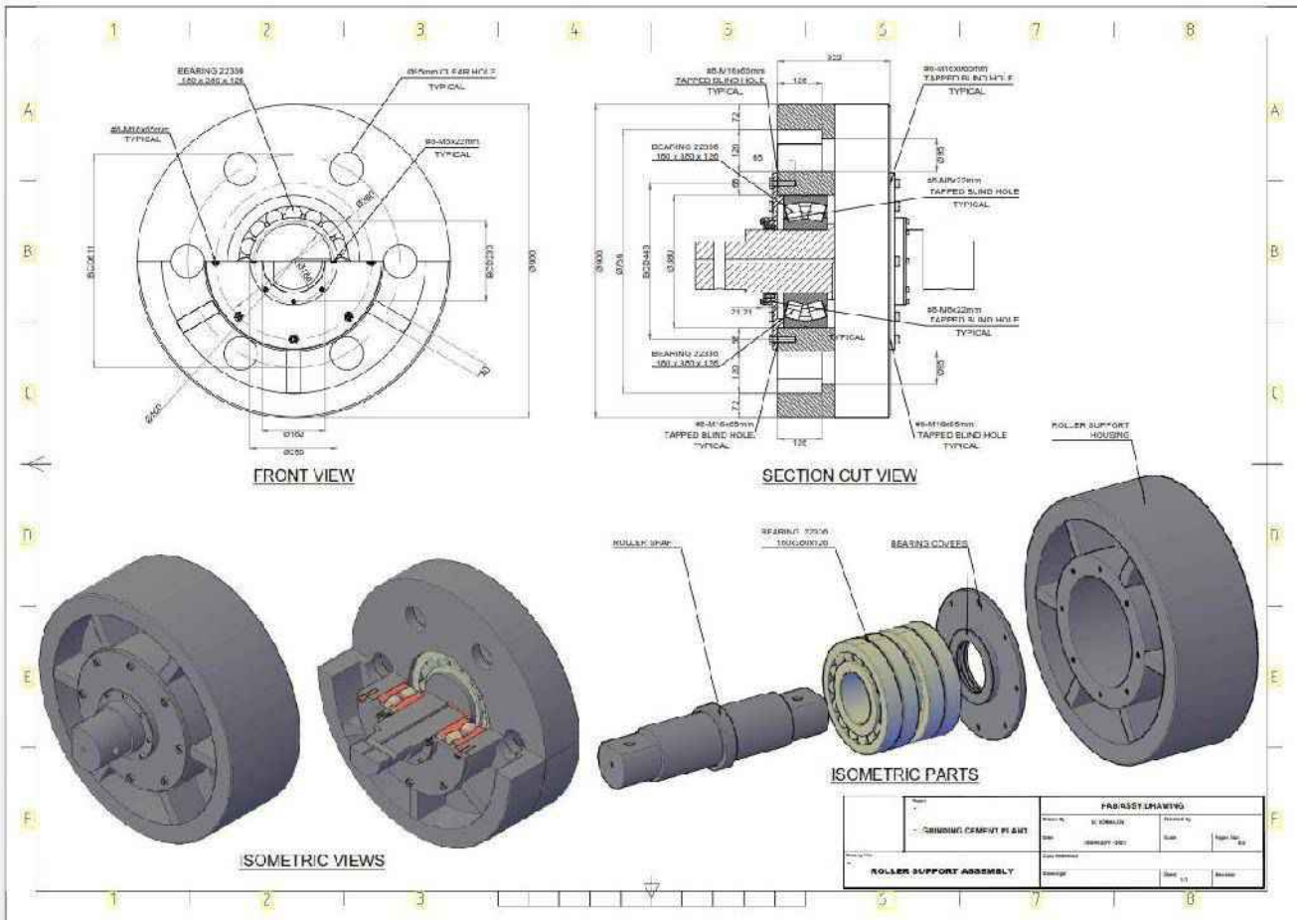
FRONT VIEW
SECTION CUT VIEW
ISOMETRIC PARTS
SOMETRIC VIEWS
ROLLER SUPPORT HOUSING
BEARING COVERS
ROLLER SUPPORT ASSEMBLY

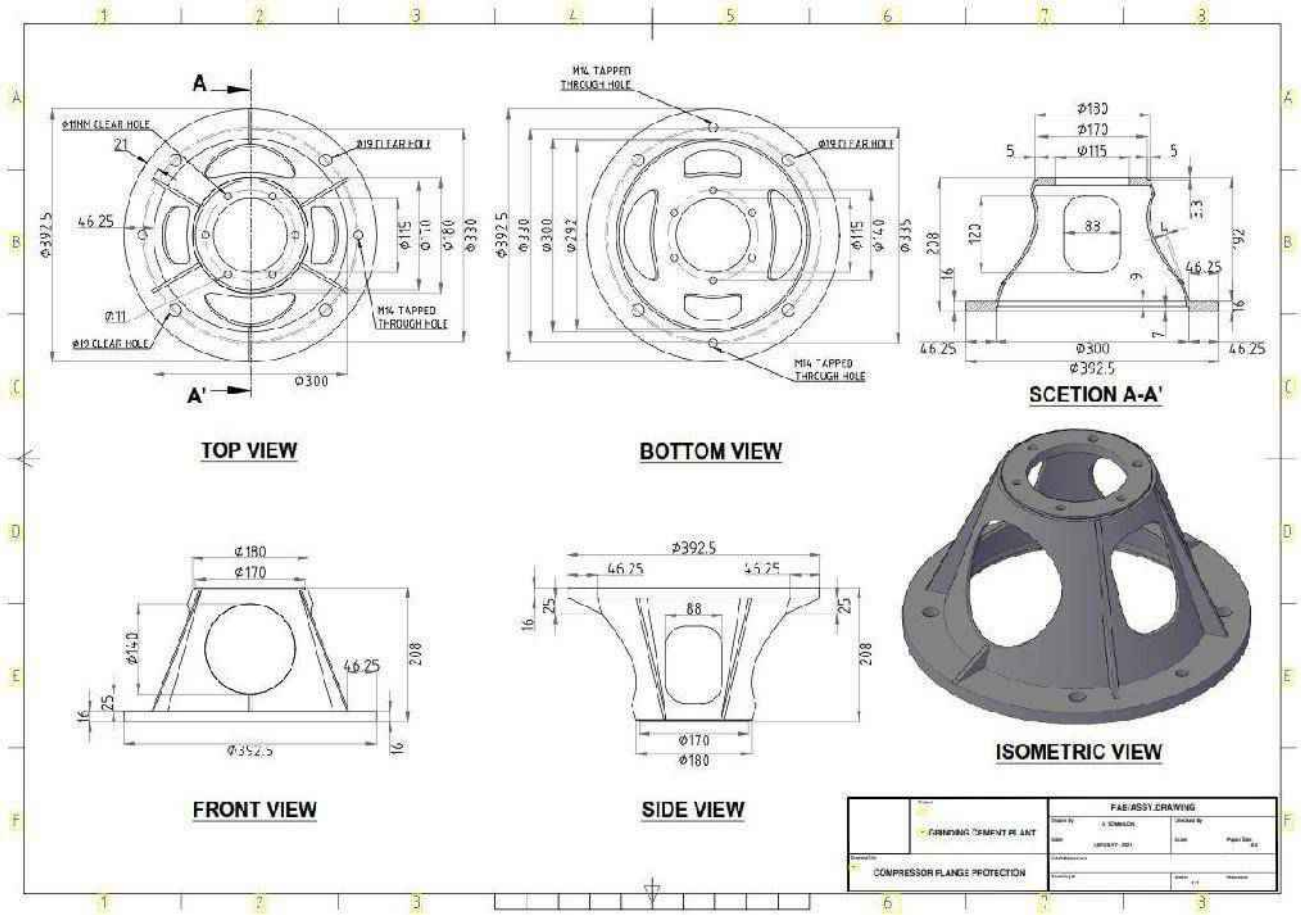
TOP VIEW
BOTTOM VIEW
SCETION A-A'
FRONT VIEW
SIDE VIEW
ISOMETRIC VIEW
M14 TAPPED THROUGH HOLE
Ø19 CLEAR HOLE
Ø11
Ø300
Ø392.5
46.25
88
208
16
25
Ø170
Ø180
Ø140
Ø115
Ø330
Ø292
Ø130
Ø135
FAB/ASSY.DRAWING
COMPRESSOR FLANGE PROTECTION

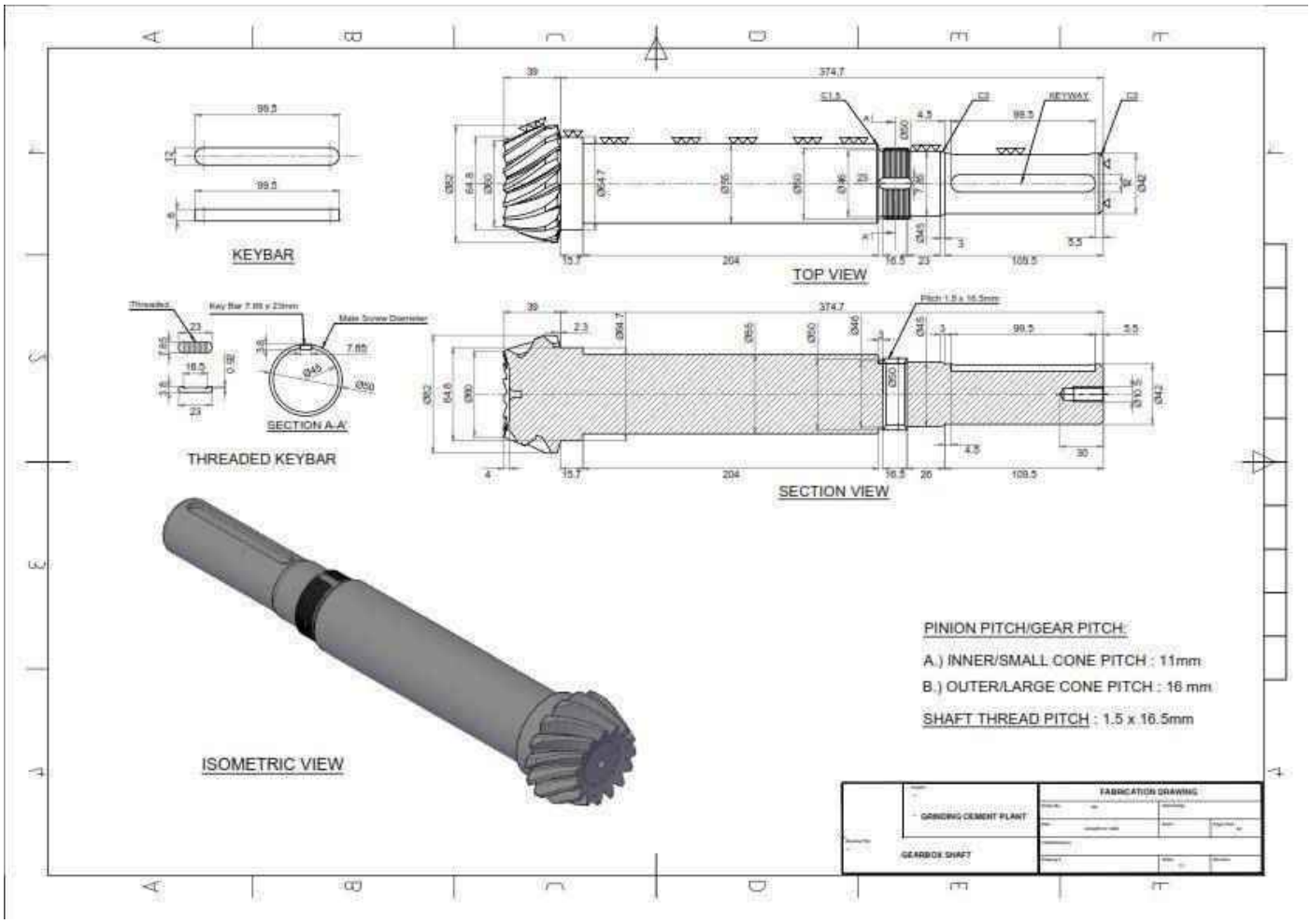
KEYBAR
TOP VIEW
THREADED KEYBAR
SECTION A-A'
SECTION VIEW
ISOMETRIC VIEW
PINION PITCH/GEAR PITCH:
A.) INNER/SMALL CONE PITCH : 11mm
B.) OUTER/LARGE CONE PITCH : 16 mm
SHAFT THREAD PITCH : 1.5 x 16.5mm
GRINDING CEMENT PLANT
GEARBOX SHAFT
FABRICATION DRAWING

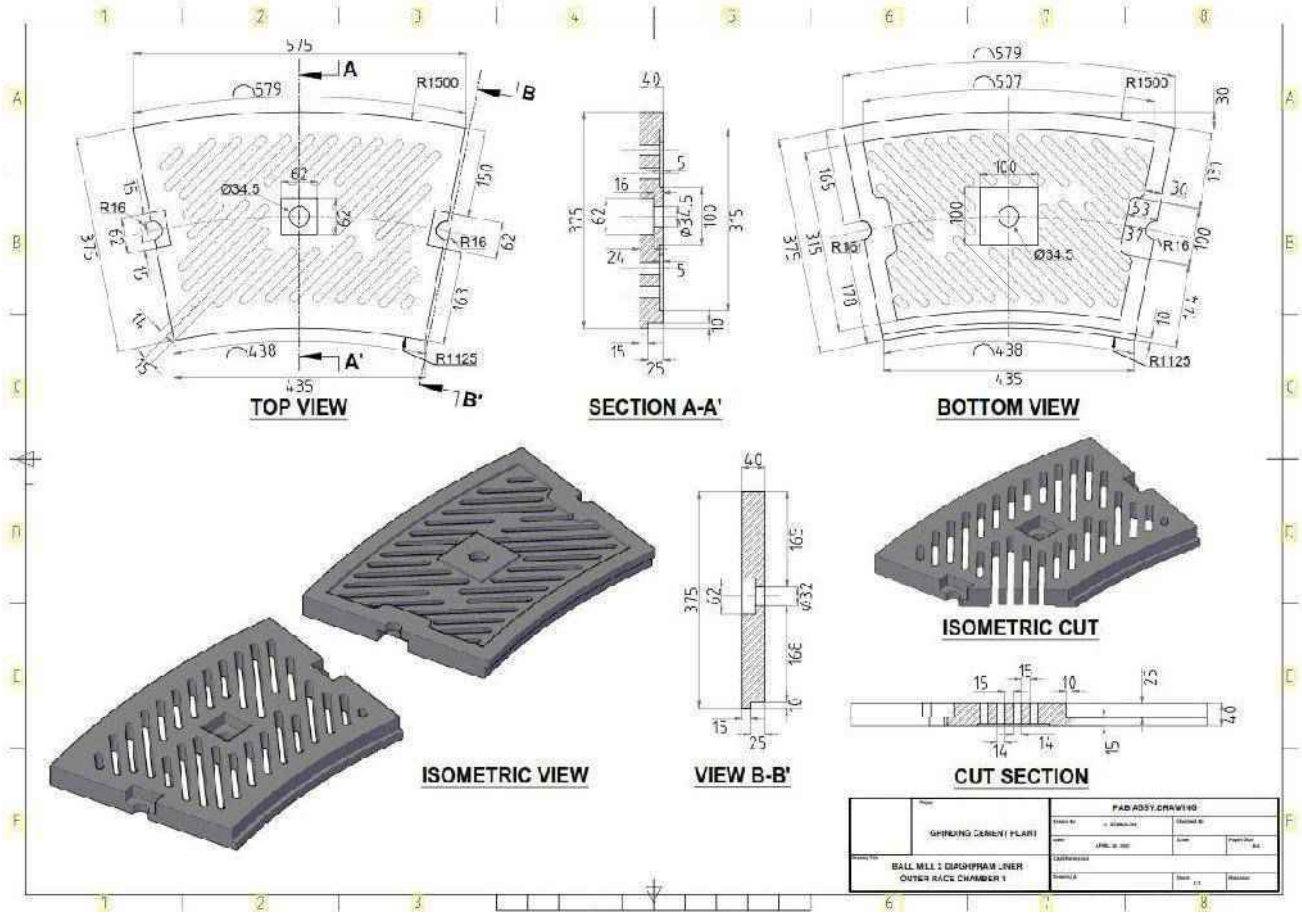
TOP VIEW
SECTION A-A'
BOTTOM VIEW
ISOMETRIC VIEW
VIEW B-B'
ISOMETRIC CUT
CUT SECTION
R1500
R1125
Ø34.5
Ø37.5
Ø32
575
579
527
438
435
GRINDING CEMENT PLANT
BALL MILL 1 DIAPHRAM LINER
OUTER RACE CHAMBER 1
PAD ASSY.DRAWING

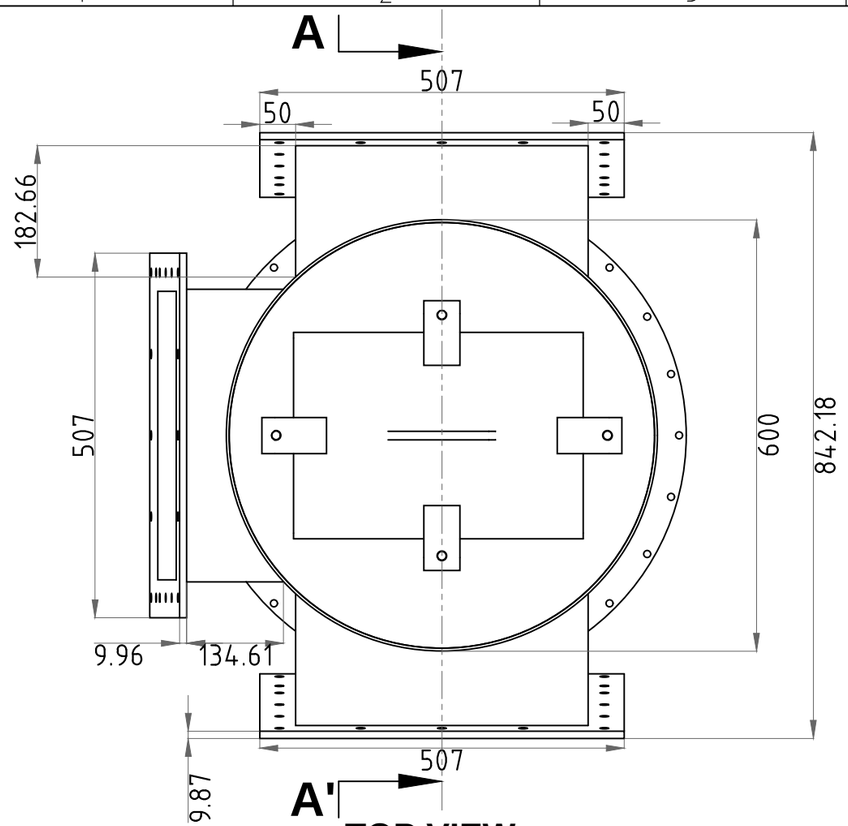


**TOP VIEW**

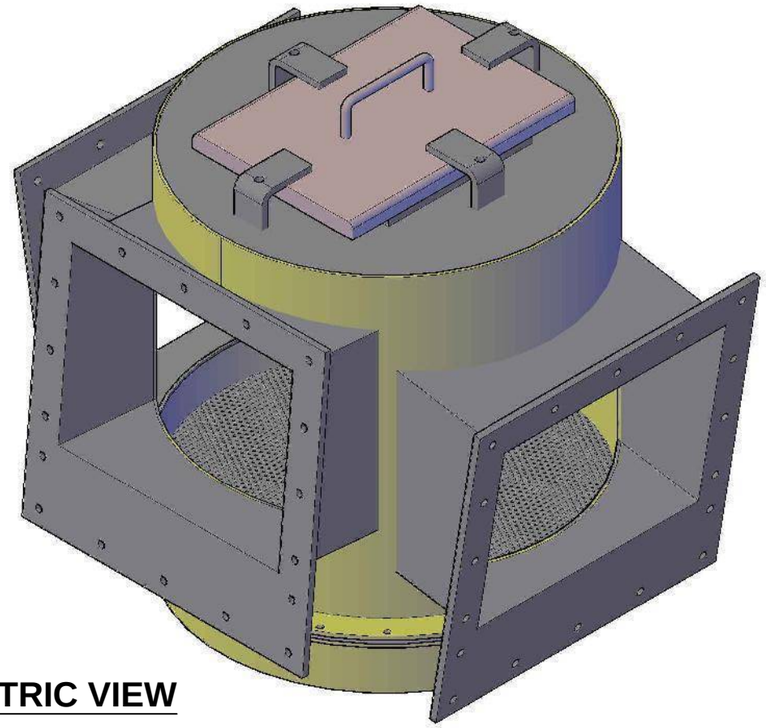

**ISOMETRIC VIEW**

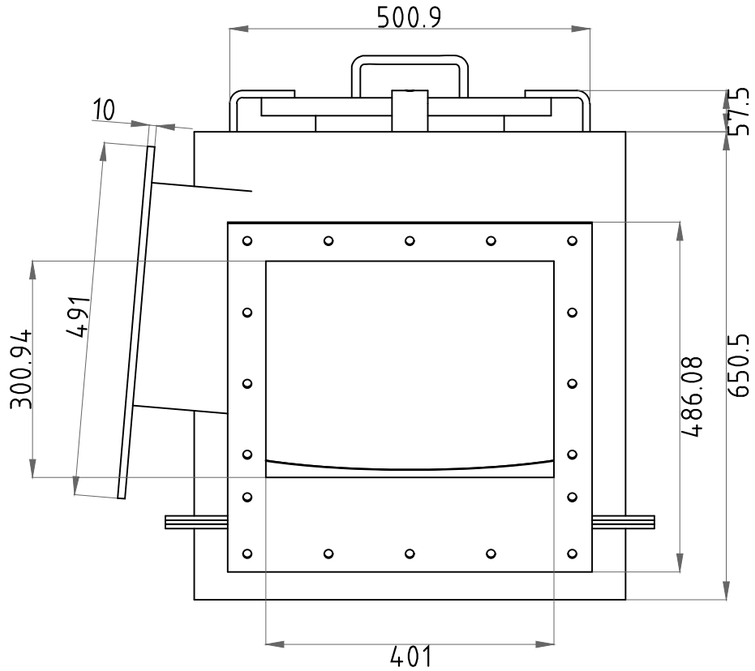


**FRONT VIEW**

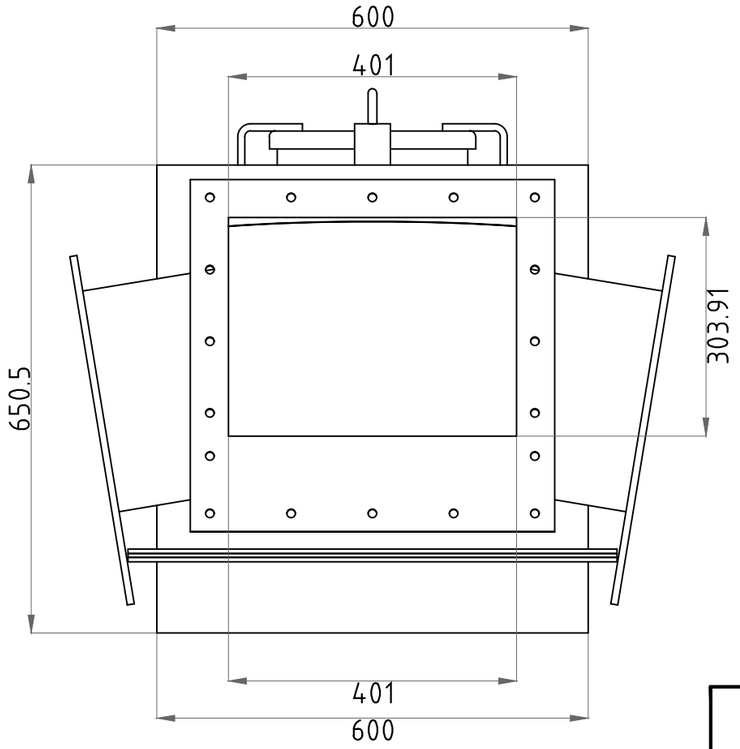


**SIDE VIEW**

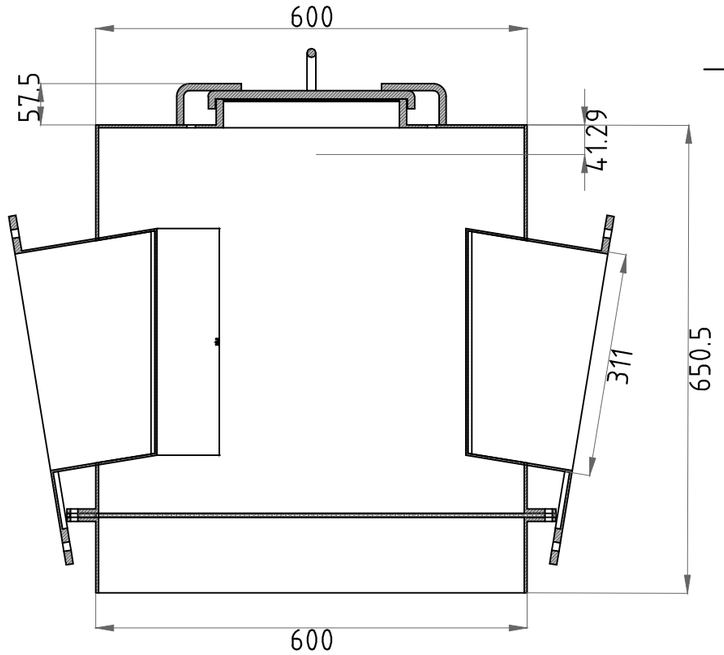


**SECTION A-A'**

| | | | |
|---|---|---|---|
| Project – GRINDING CEMENT PLANT | FAB/ASSY.DRAWING | | |
| | Drawn By D. SOMBILON | Checked By | |
| | Date DECEMBER - 2020 | Scale | Paper Size A4 |
| Drawing Title – AIRSLIDE DIVETER CONNECTOR ASSEMBLY | CAD Reference | | |
| | Drawing # | Sheet 1/1 | Revision |

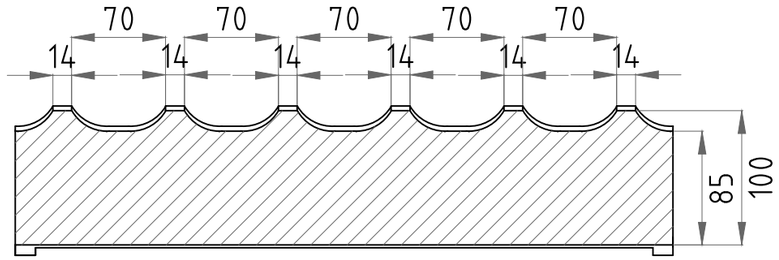


**BACK VIEW**

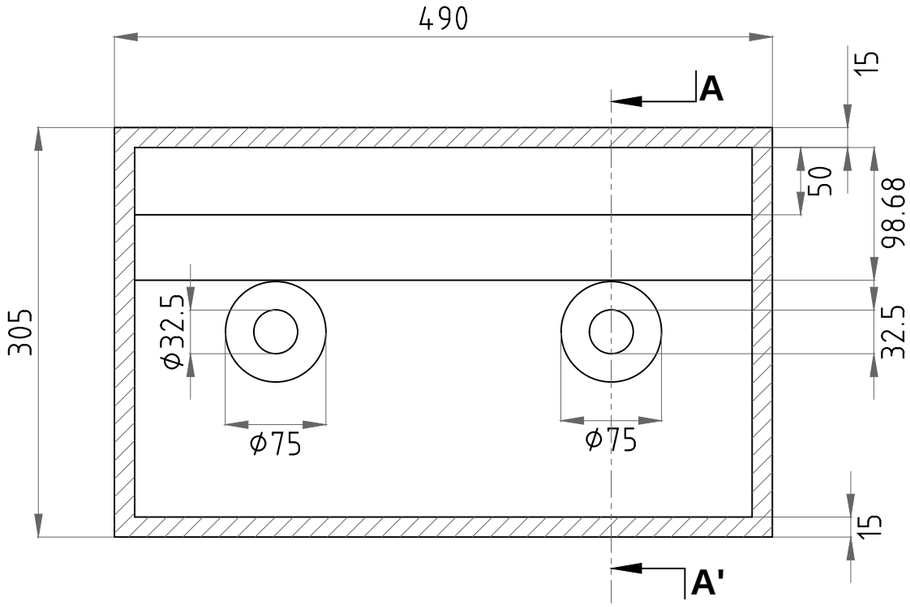


**BOTTOM VIEW**

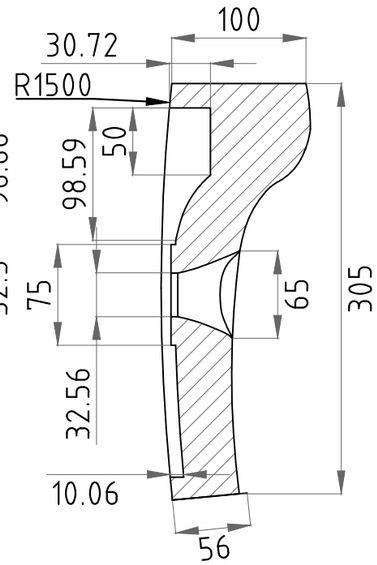


**SECTION A-A'**

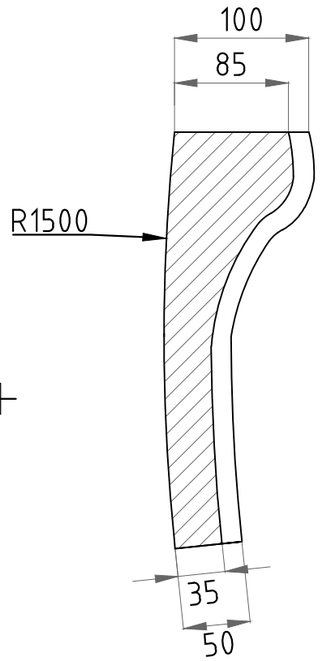


**SIDE VIEW**

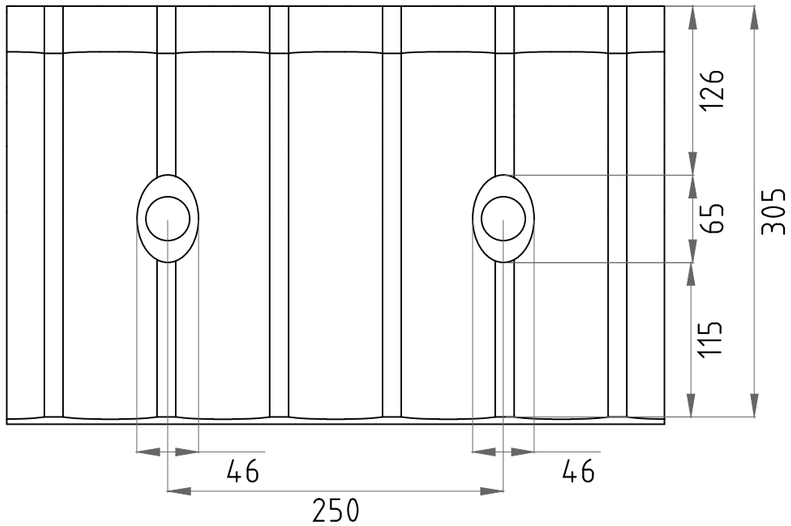


**TOP VIEW**

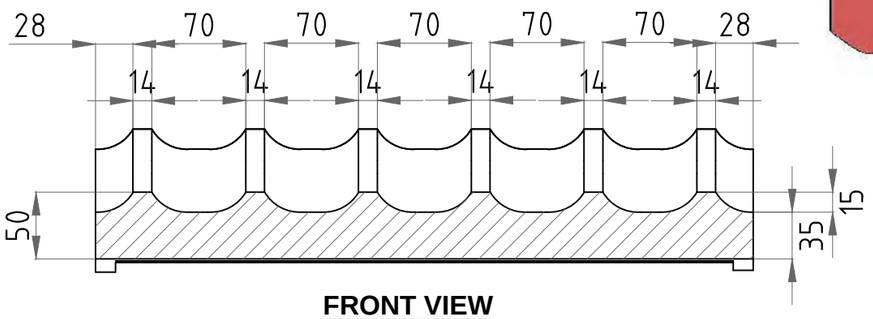


**FRONT VIEW**

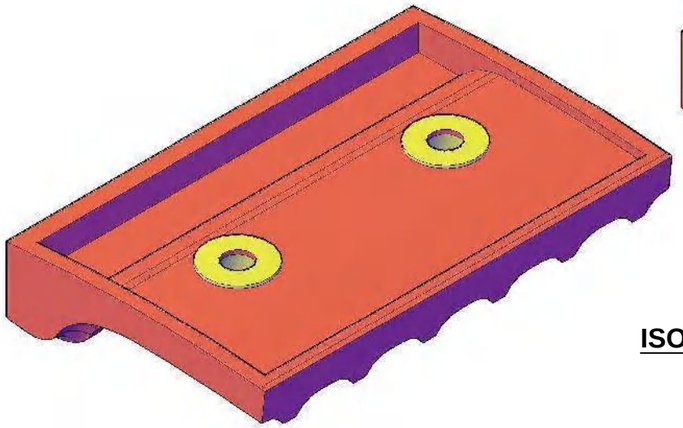

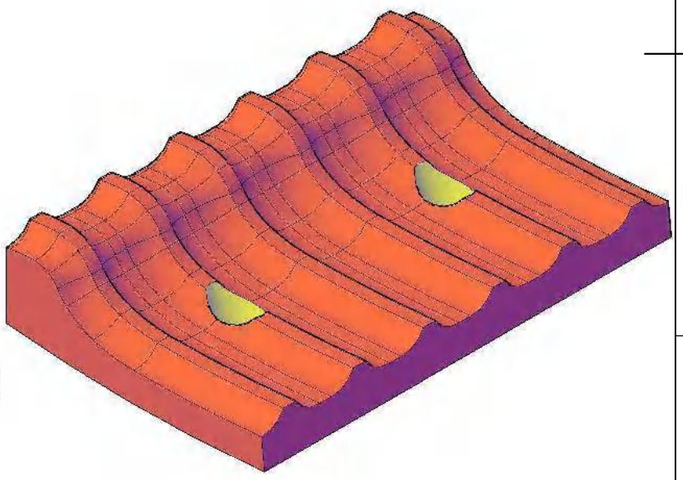

**ISOMETRIC VIEW**

| | | | |
|---|---|---|---|
| Project – GRINDING CEMENT PLANT | FAB/ASSY.DRAWING | | |
| | Drawn By D. SOMBILON | Checked By | |
| | Date JANUARY - 2021 | Scale | Paper Size A4 |
| Drawing Title – MILL 2 LINER 305 X 490 MM | CAD Reference | | |
| | Drawing # | Sheet 1/1 | Revision |

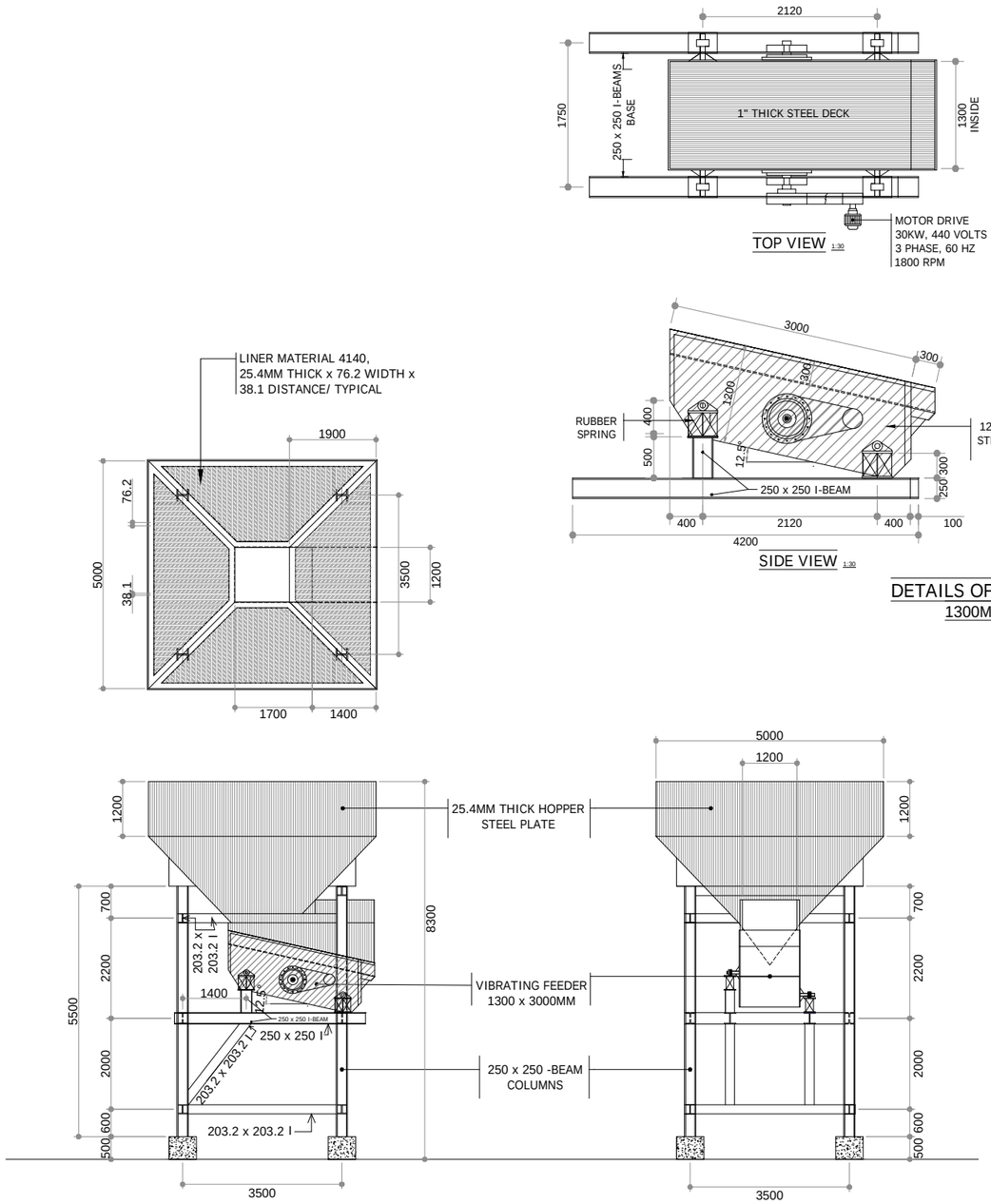


DETAILS OF VIBRATING FEEDER 1:30
1300MM X 3000MM LONG

SET-UP OF VIBRATING FEEDER 1:100

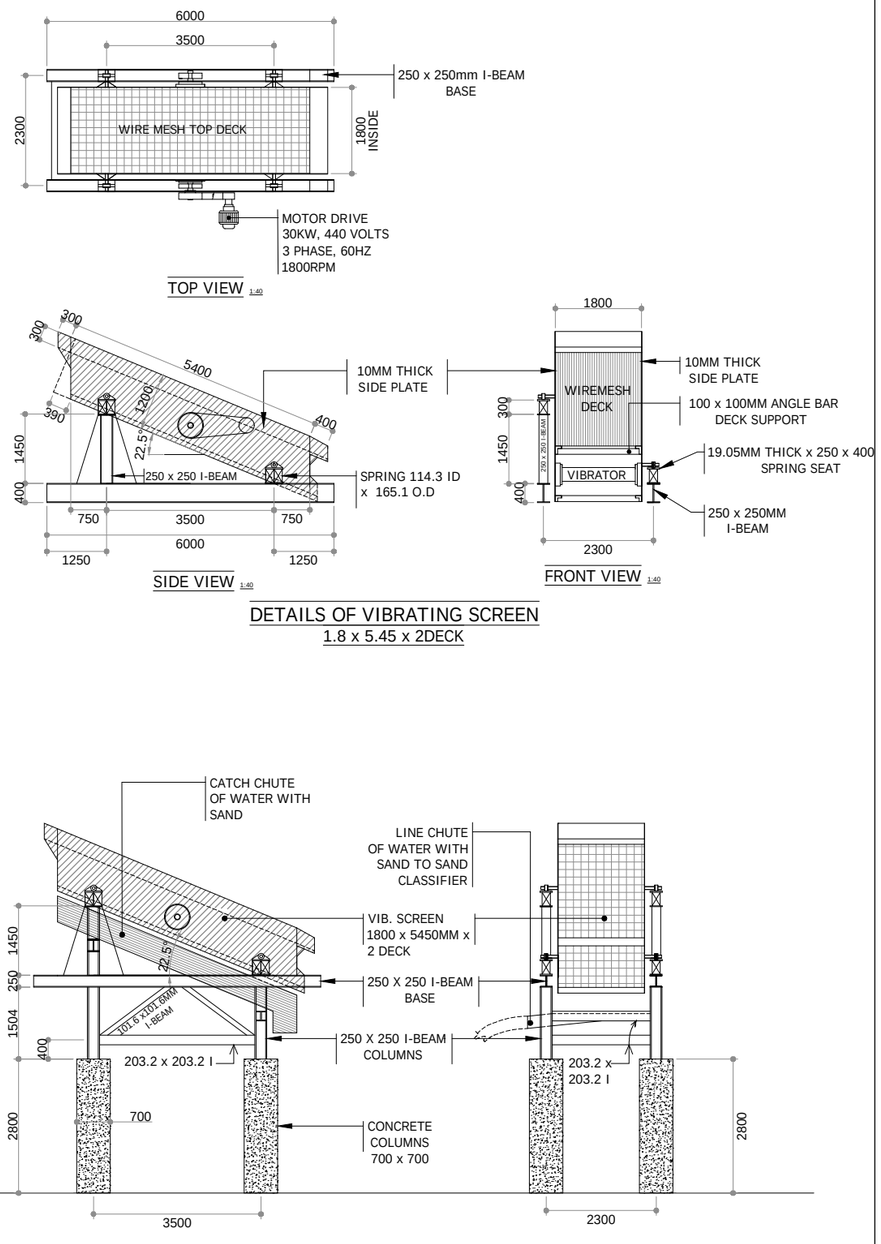


DETAILS OF VIBRATING SCREEN
1.8 x 5.45 x 2DECK

SET-UP OF VIBRATING SCREEN 1:100

| ENGINEER: | OWNER: | PROJECT TITLE: | SHEET CONTENTS: | SHEET NO. |
|---|---|---|---|---|
| | By: _____ | ROCK CRUSHING PLANT<br>LOCATION | VIBRATING FEEDER AND VIBRATING SCREEN<br>DETAILS AND SETUP<br>END DATE: CHECKED BY: | A-1 |

# SOLIDWORKS
## SOLID MODELLING
## SAMPLE PORTFOLIO

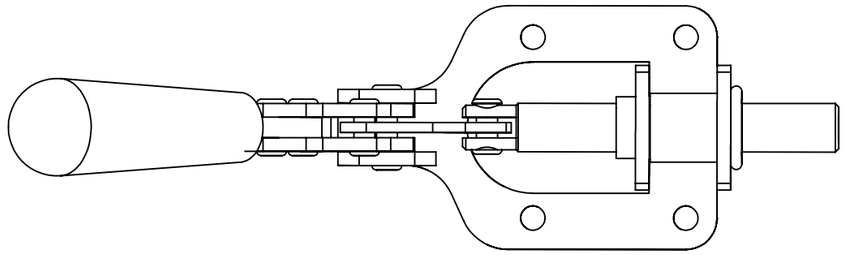

(1 : 1.4)

**TOP VIEW**

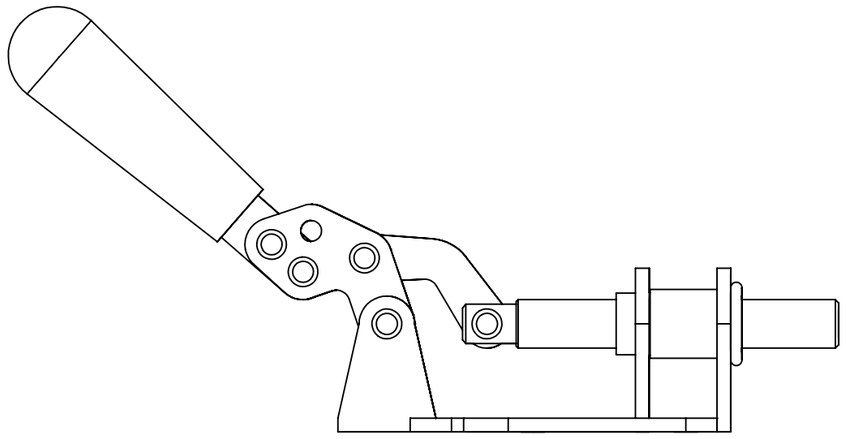

(1 : 1.4)

**LEFT VIEW**

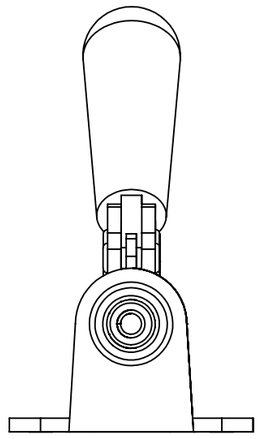

(1 : 1.4)

**FRONT VIEW**

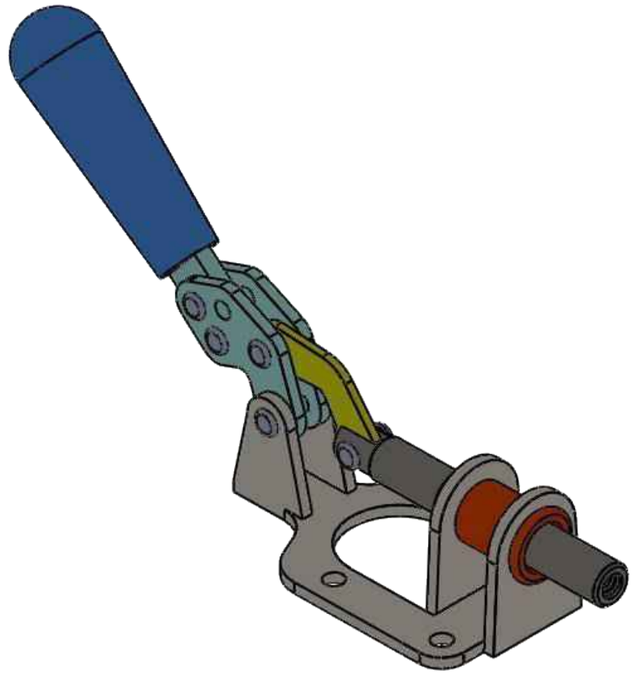

(1 : 1.4)

**ISOMETRIC**

| | | | | | | |
|---|---|---|---|---|---|---|
| UNLESS OTHERWISE SPECIFIED:<br>DIMENSIONS ARE IN MILLIMETERS<br>SURFACE FINISH:<br>TOLERANCES:<br>LINEAR:<br>ANGULAR: | FINISH: | | | DEBURR AND BREAK SHARP EDGES | DO NOT SCALE DRAWING | REVISION |
| | NAME | SIGNATURE | DATE | | TITLE: TOGGLE CLAMP ASSEMBLY | |
| DRAWN | DAREN | | | | | |
| CHK'D | | | | | | |
| APPV'D | | | | | | |
| MFG | | | | | | |
| Q.A | | | | MATERIAL: | DWG NO. GUE-TCA-00 | A3 |
| | | | | WEIGHT: | SCALE:1:2 | SHEET 1 OF 2 |

# TOGGLE CLAMP ASSEMBLY RENDERING

# 3D Rendering Samples from AutoCAD

# Onshape 3D Model Rendering Sample

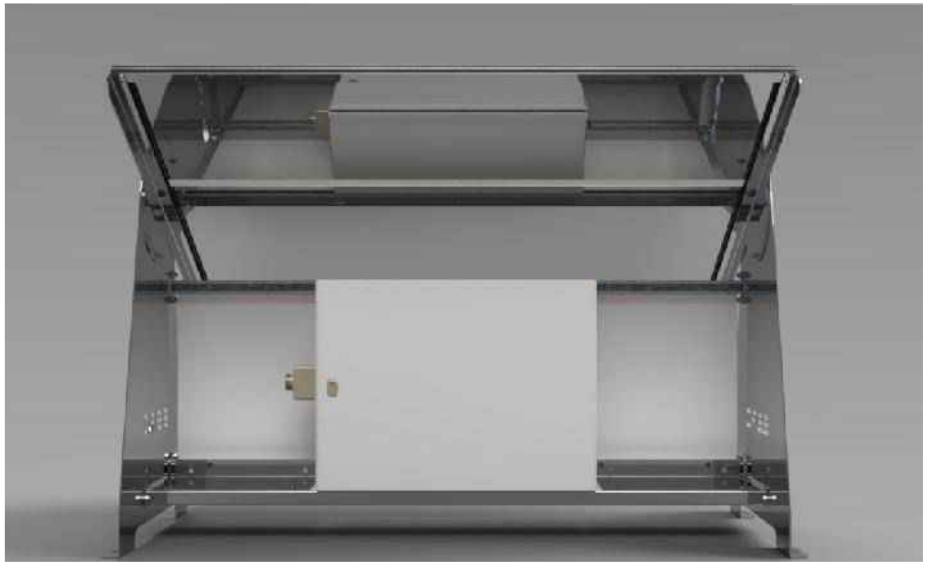

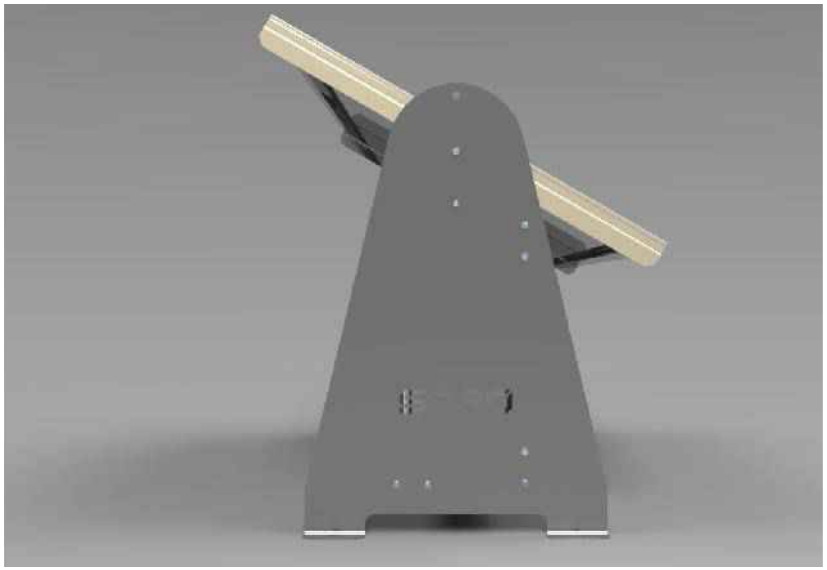

| | |
|---|---|
| FABRICATED BY | DATE |
| FABRICATION CHECK BY | DATE |
| WELD CHECK BY | DATE |

| REV | DATE | DESCRIPTION | DRN | CHK |
|---|---|---|---|---|
| A | 07/10/2024 | ISSUE FOR APPROVAL | DS | |

# 3D RENDERING

GENERAL NOTE

ALL STEELWORK TO BE FABRICATED & ERECTED TO AS4100
ALL WELDS TO BE 6MM C.F.W- U.N.O.
ALL WELDING TO AS1554
ALL CLEATS TO BE ON CENTERLINE U.N.O
HARDSTAMP ASSEMBLY MARK WHERE INDICATED THUS
ALL SNIPES ARE 15x45°

| | | | |
|---|---|---|---|
| DRAWING TITLE | | | |
| CONTRACT | | | |
| MODELLED BY | | CHECKED BY | |
| SHEET NO. | 1 OF 1 | DRAWING NO. | REVISION |
| SCALE. | 1:10 | - | A |

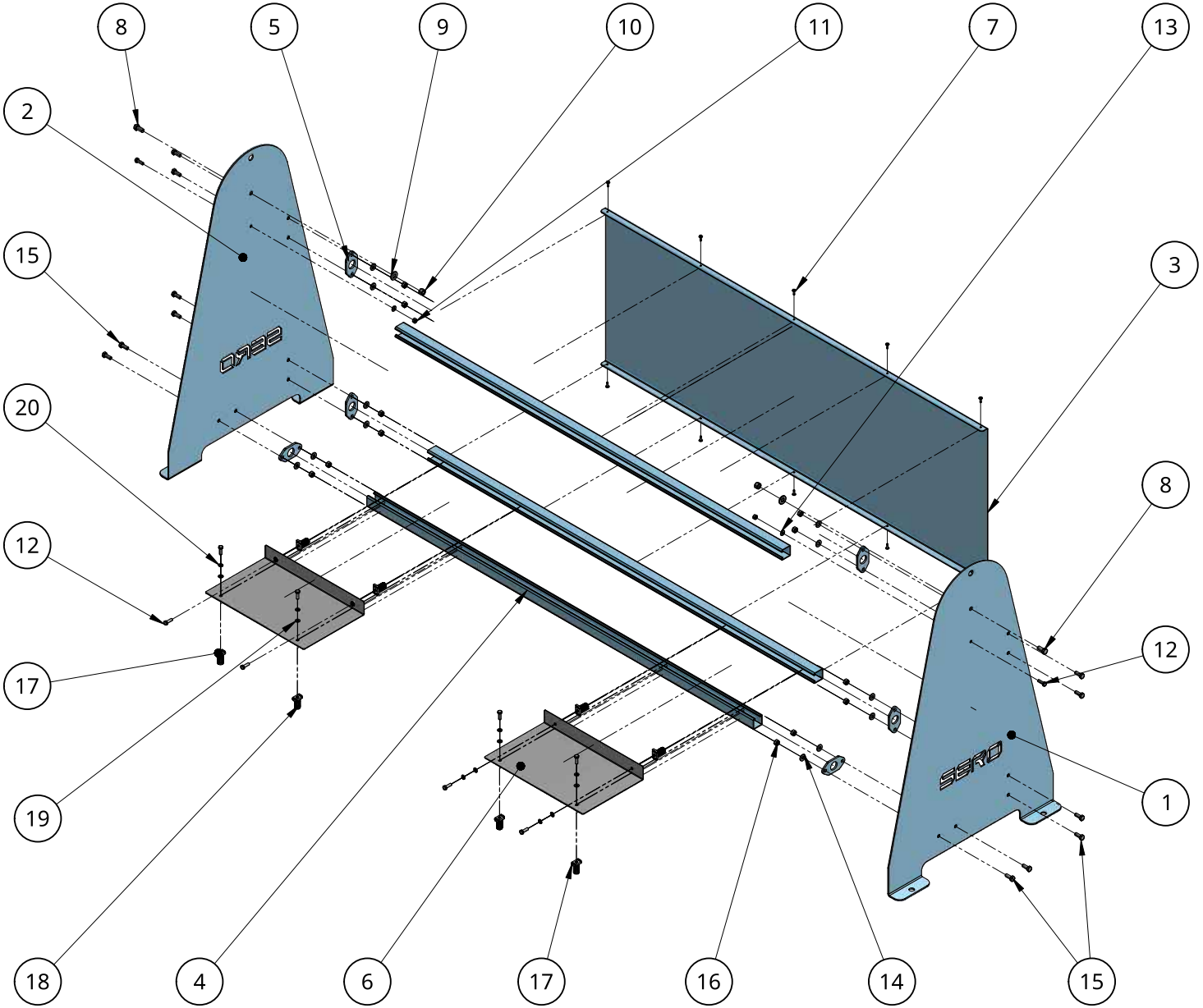


| ITEM | QTY | PART NUMBER | DESCRIPTION | DIMENSION |
|---|---|---|---|---|
| 1 | 1 | Z-PRT-RSC1A-00 | Right Side Sero Cover | 1165 x 750 x 4mmx GR250 |
| 2 | 1 | Z-PRT-LSC1A-00 | Left Side Sero Cover | 1165 x 750 x 4mmx GR250 |
| 3 | 1 | Z-PRT-BCP1A-00 | Back Cover Plate | 1740 x 655 x 2mm PL |
| 4 | 3 | Z-PRT-UNS1A-00 | P100T Unistrut | 1758 x 41.28 |
| 5 | 6 | Z-PRT-CNP1A-00 | Connecting Plate | 100 x 49 x 6mm GR250 |
| 6 | 2 | Z-PRT-MUT1A-00 | Mounting Trays | 324.5 x 450 x PGI |
| 7 | 10 | Z-ACC-SDS1A-00 | Self Drilling Screw | ST4.8 x 16mm Galvanised |
| 8 | 2 | Z-ACC-HEX12A-00 | Hex Head Screw | M12 x 25 Galvanised Steel |
| 9 | 3 | Z-ACC-WSH12A-00 | Washer | M12 x 25 Galvanised Steel |
| 10 | 2 | Z-PRT-NUT12A-00 | Nylock Nut | M12 x 25 Galvanised Steel |
| 11 | 2 | Z-PRT-NUT8A-00 | Nylock Nut | M8x 20 Galvanised Steel |
| 12 | 10 | Z-ACC-HEX8A-00 | Hex Head Screw | M8x 20 Galvanised Steel |
| 13 | 2 | Z-ACC-WSH8A-00 | Washer | M8x 20 Galvanised Steel |
| 14 | 12 | Z-ACC-WSH10A-00 | Washer | M10x 25 Galvanised Steel |
| 15 | 12 | Z-ACC-HEX10A-00 | Hex Head Screw | M10x 20 Galvanised Steel |
| 16 | 12 | Z-ACC-NUT10A-00 | Nylock Nut | M10x 20 Galvanised Steel |
| 17 | 8 | Z-ACC-SPN8A-00 | Spring Nut | M8x 25 Galvanised Steel |
| 18 | 8 | Z-ACC-SPR8A-00 | Spring | M8x 25 Galvanised Steel |
| 19 | 8 | Z-ACC-FLW8A-00 | Flat Washer | M8x 25 Galvanised Steel |
| 20 | 8 | Z-ACC-SPW8A-00 | Spring Washer | M8x 25 Galvanised Steel |

| | |
|---|---|
| FABRICATED BY | DATE |
| FABRICATION CHECK BY | DATE |
| WELD CHECK BY | DATE |

| REV | DATE | DESCRIPTION | DRN | CHK |
|---|---|---|---|---|
| A | 07/08/2024 | ISSUE FOR APPROVAL | DS | |

DRAWING : ASSEMBLY

GENERAL NOTE

ALL STEELWORK TO BE FABRICATED & ERECTED TO AS4100
ALL WELDS TO BE 6MM C.F.W- U.N.O.
ALL WELDING TO AS1554
ALL CLEATS TO BE ON CENTERLINE U.N.O
HARDSTAMP ASSEMBLY MARK WHERE INDICATED THUS
ALL SNIPES ARE 15x45°

| | | | |
|---|---|---|---|
| DRAWING TITLE | DRAWING ASSEMBLY | | |
| CONTRACT | | | |
| MODELLED BY | | CHECKED BY | |
| SHEET NO. | 1 OF 1 | DRAWING NO. | REVISION |
| SCALE. | 1:10 | - | A |