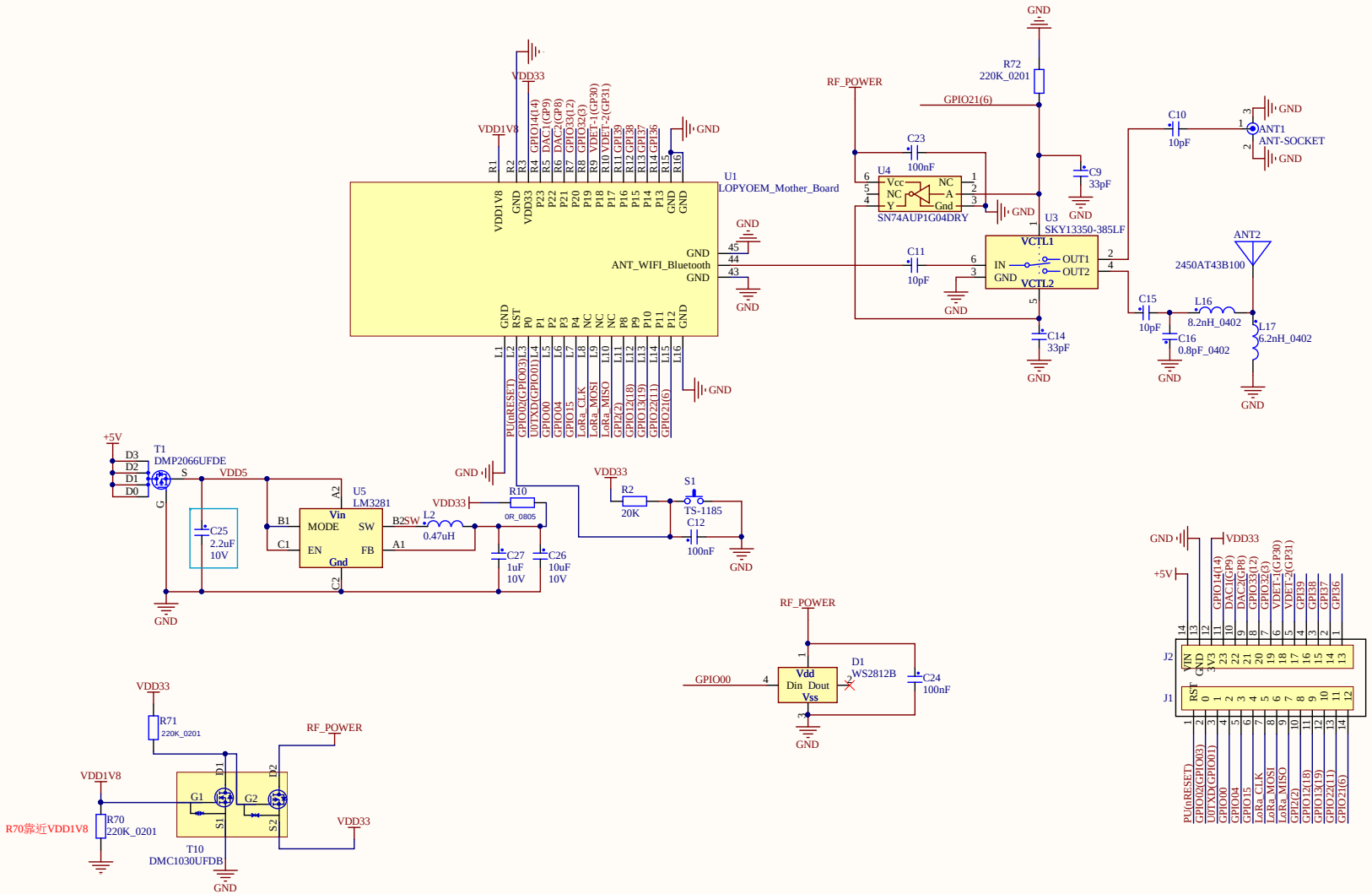

Company : In-tech Electronics Limited

Model: *	The information contained herein shall not be reproduced without the prior written by In-Tech Ltd	
Title: *		
Drawn: KC Cheung Date: 2017/5/25	Doc no.: *	Version: *
Approved: Nicholas Tso Date: 2017/5/25	File name: *	Sheet 1 of 2

Unless otherwise indicated, Printed Copies Are Uncontrolled.