OMAR GAAD

3omargaad@gmail.com
www.linkedin.com/in/omar-gaad/
07359551649
London, UK

Forehead Mass Index (FMI)

```
        switch (personality) {
            case "Zen-Vibes":
                personalityValue = -10;
                break;
            case "Lowkey-Savage":
                personalityValue = -5;
                break;
            case "Very-Handsome":
                personalityValue = 5;
                break;
            case "Big-Brain-Energy":
                personalityValue = 10;
                break;
            default:
                break;
        }
        // Modifies personalityValue based on input
```

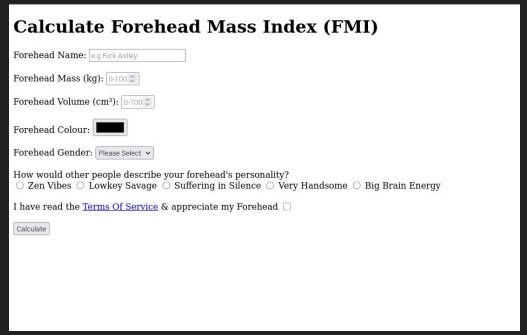

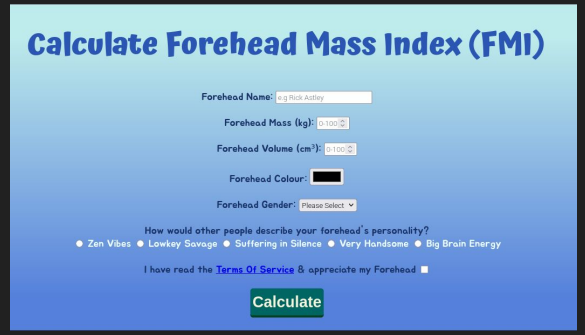

What?

- A website that calculates someone's Forehead Mass Index (FMI)
- FMI is a fictional metric inspired by Body Mass Index (BMI)

How?

- Developed with Web Technologies:
  - **HTML**
  - **CSS**
  - **JavaScript**
- **Git** for Version Control & **GitHub** for hosting

Results

- Explore the website here: https://3omargaad.github.io/FMI/
- 5 types of FMI are available, can you find them all?

OMAR GAAD

3omargaad@gmail.com
www.linkedin.com/in/omar-gaad/
07359551649
London, UK

Smiley PCB

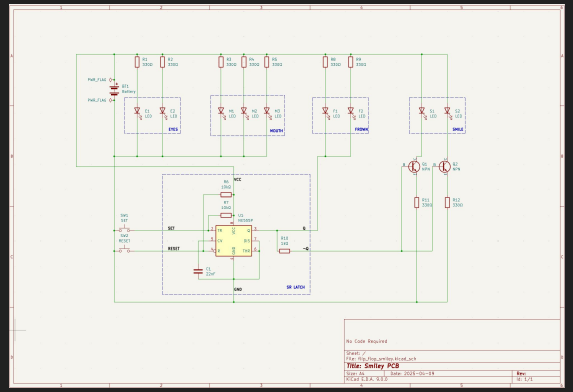

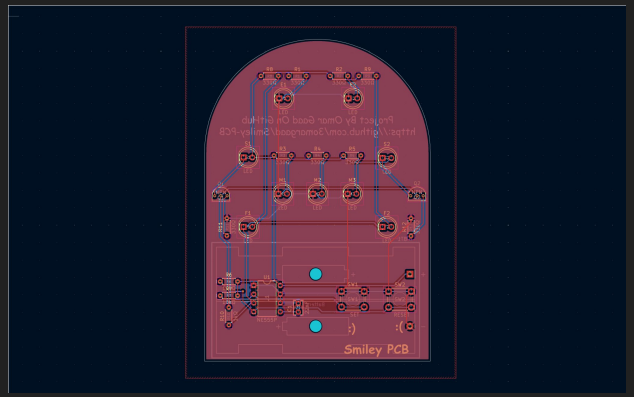

What?

- A circuit board that starts of frowning, but smiles with the push of a button

How?

- Prototyped on a **Breadboard**
- **Schematic & PCB Design** developed using **KiCad** Software
- **Ordered** online from a PCB Manufacturing company
- **Soldered** THT Components by hand

Results

- Functional Circuit using only 2 AA Batteries
- Parallel Design ensures if one LED breaks, the rest of the circuit works as expected

OMAR GAAD

3omargaad@gmail.com
www.linkedin.com/in/omar-gaad/
07359551649
London, UK

DIY Watch Chain

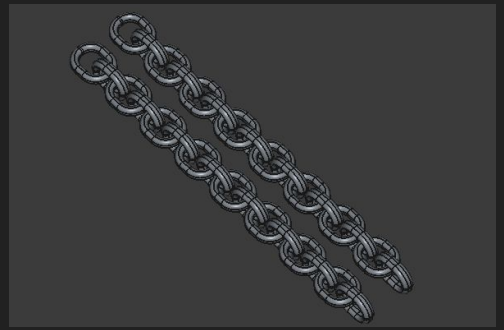

What?

- I repeatedly broken my watch strap as a result of fiddling with it
- Instead of re-fixing it, I decided to create a custom watch chain

How?

- Used **FreeCAD** to **3D model chain**
- Printed the main chain using my school's **3D Printer**
- Ordered 'S Link' parts from 3D Printing Manufacturer

Results

- A satisfying, fiddle-proof watch
- Concept reduces E-waste
- 'S Link's made out of PETG instead of PLA for durability

OMAR GAAD

3omargaad@gmail.com
www.linkedin.com/in/omar-gaad/
07359551649
London, UK

Mafia

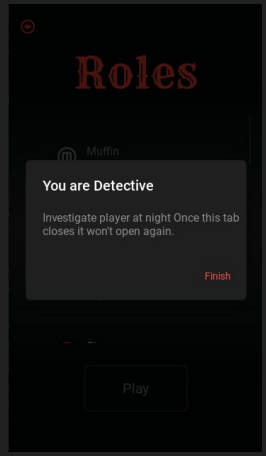

What?

- A mobile and desktop cross-platform application for the social deduction game
- Your device acts as the “host”, allowing everyone to play.

How?

- Programmed in **Python** using the **kivymd** library for UI
- Project **documentation** to record analysis, design and testing stages
- Created an **Android Developer** account to publish mobile app

Results

- The app GUI has been developed
- Functionality in progress...