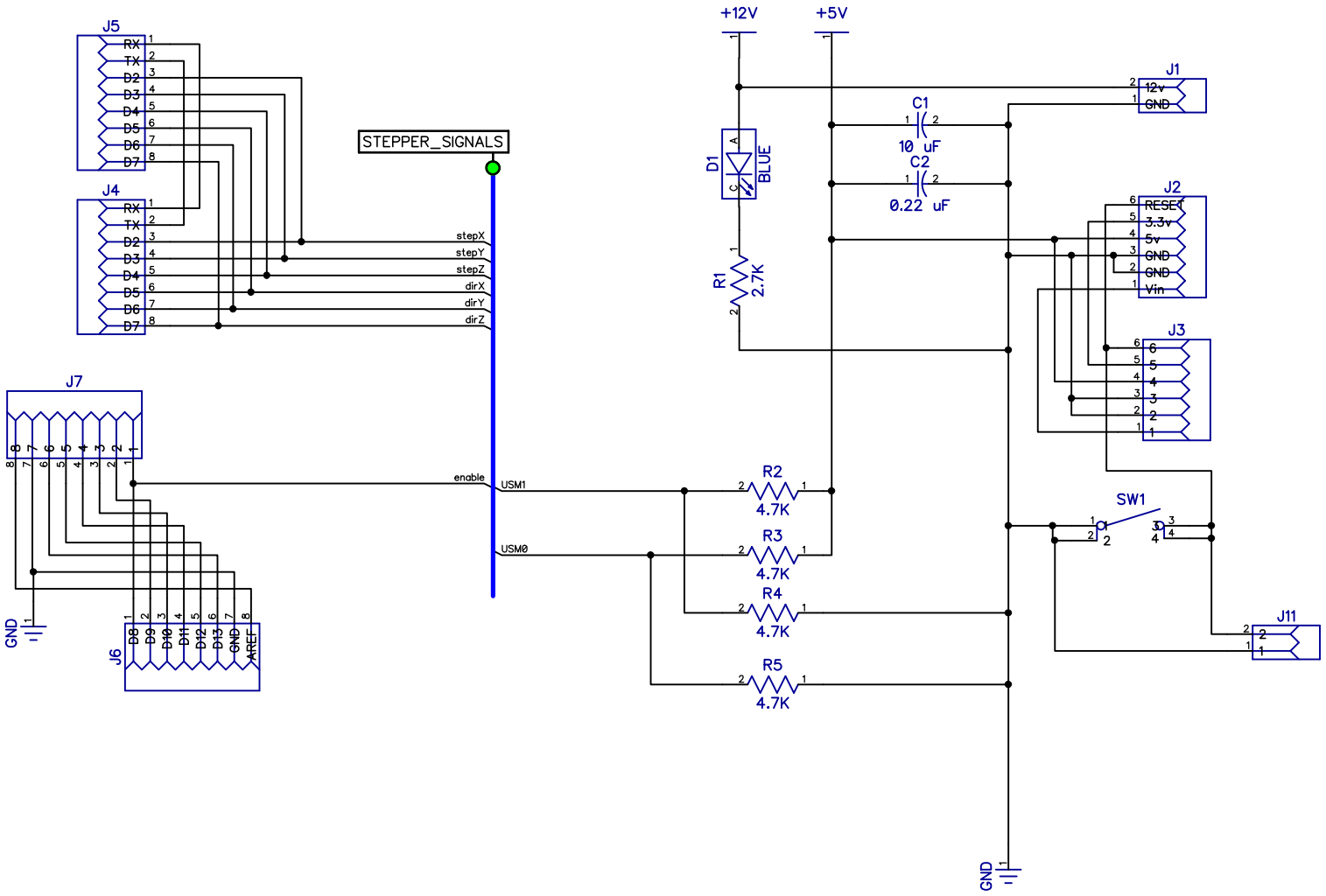

Note: Prints best using Preview at 90% print scale

Rev041	Board 131 - TinyG Stepper Controller	7/27/10	ash	Sheet1