nice!nano MCU

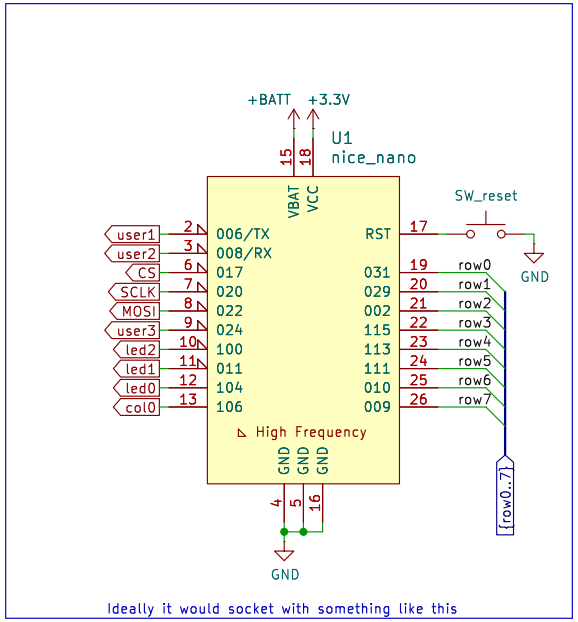

Mounts, test points

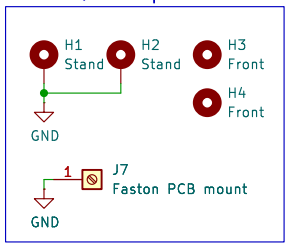

User

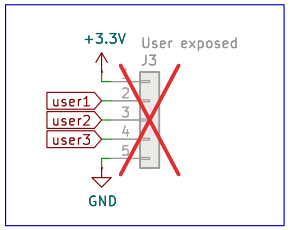

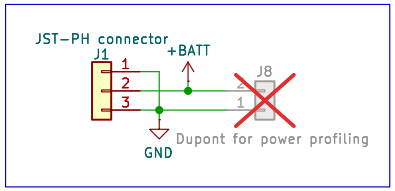

Connector

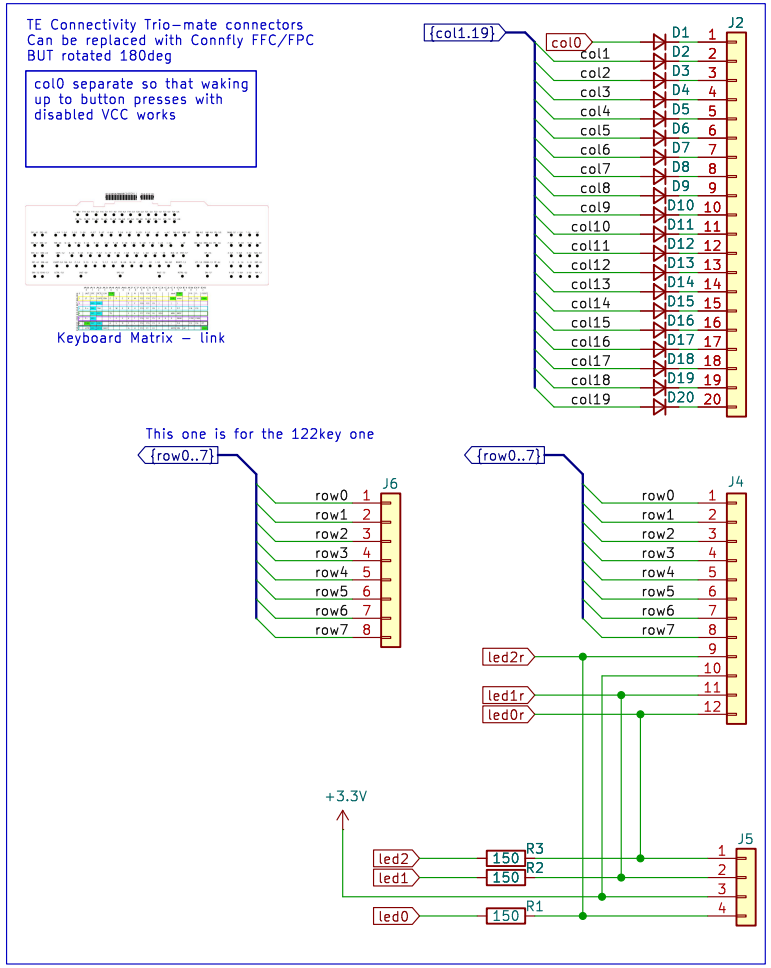

Shifters

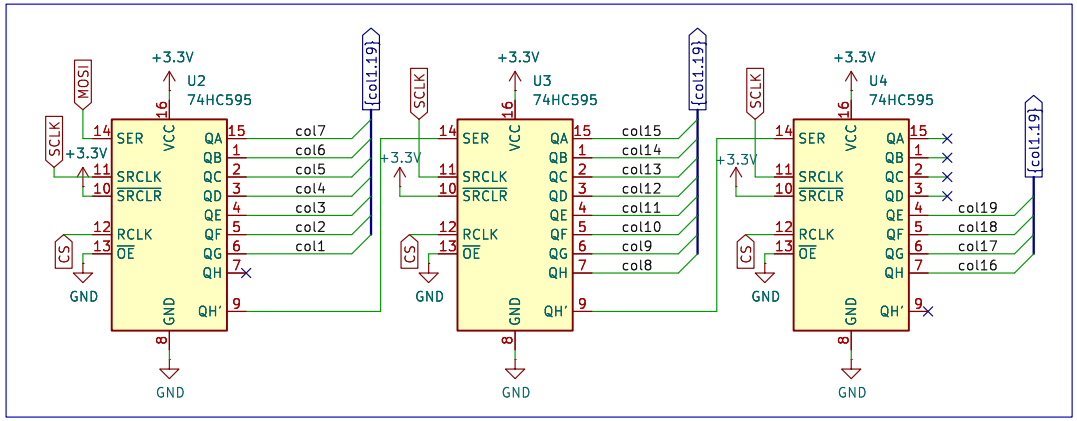

Sheet: /
File: modelk.kicad_sch

Title: Model K

Size: A4	Date: 2025-06-15	**Rev: 0.7.4**
KiCad E.D.A. 9.0.1		Id: 1/1