nice!nano MCU

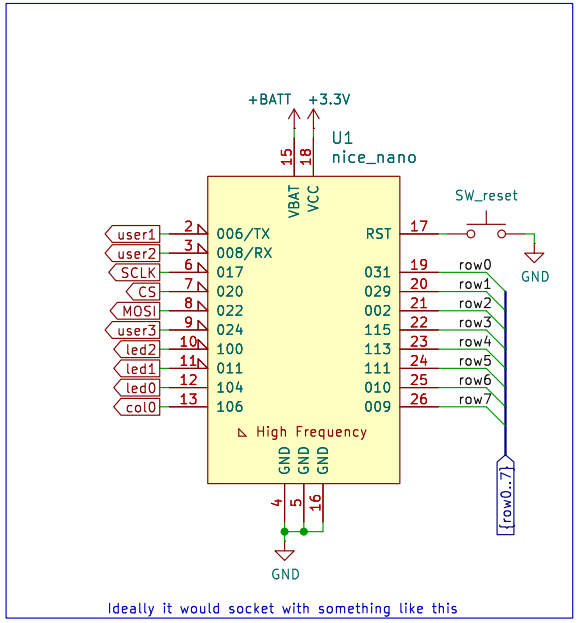

Mounts, test points

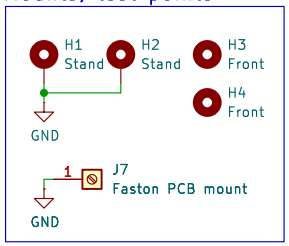

User

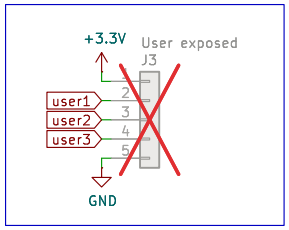

Battery Connector

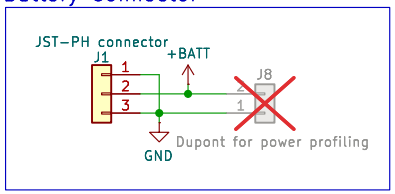

Connector

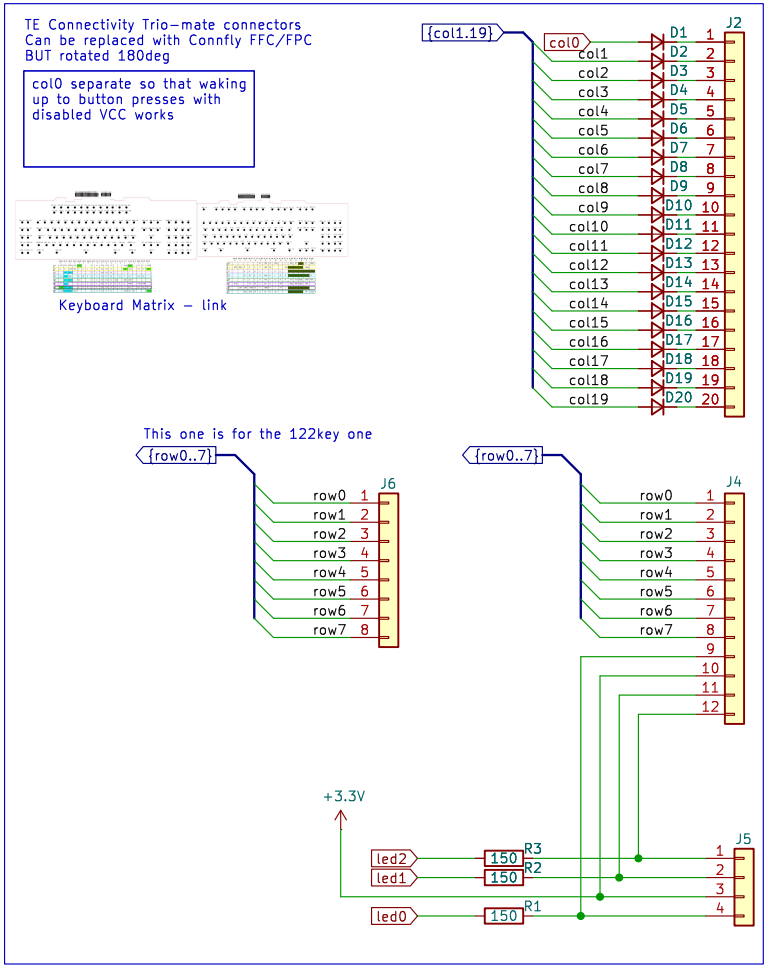

Shifters

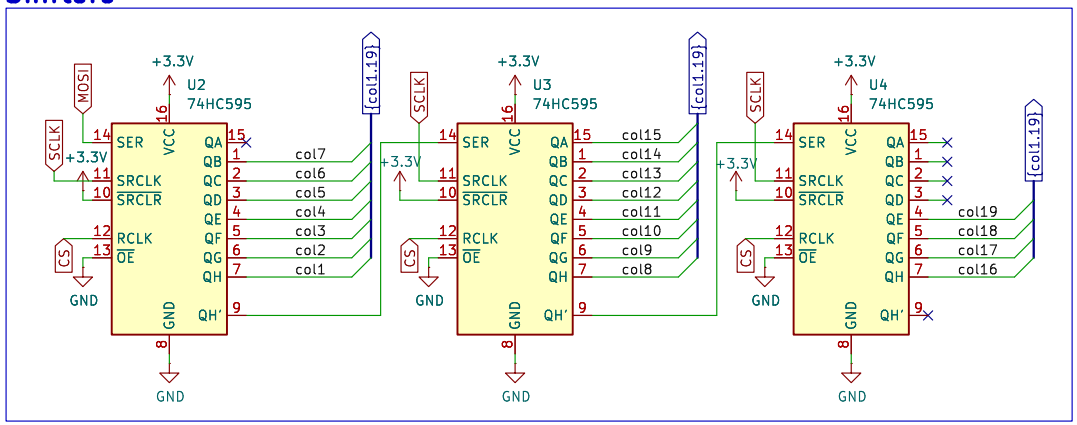

Sheet: /
File: modelk.kicad_sch

Title: Model K

Size: A4	Date: 2025-06-18	Rev: 0.10
KiCad E.D.A. 9.0.1		Id: 1/1