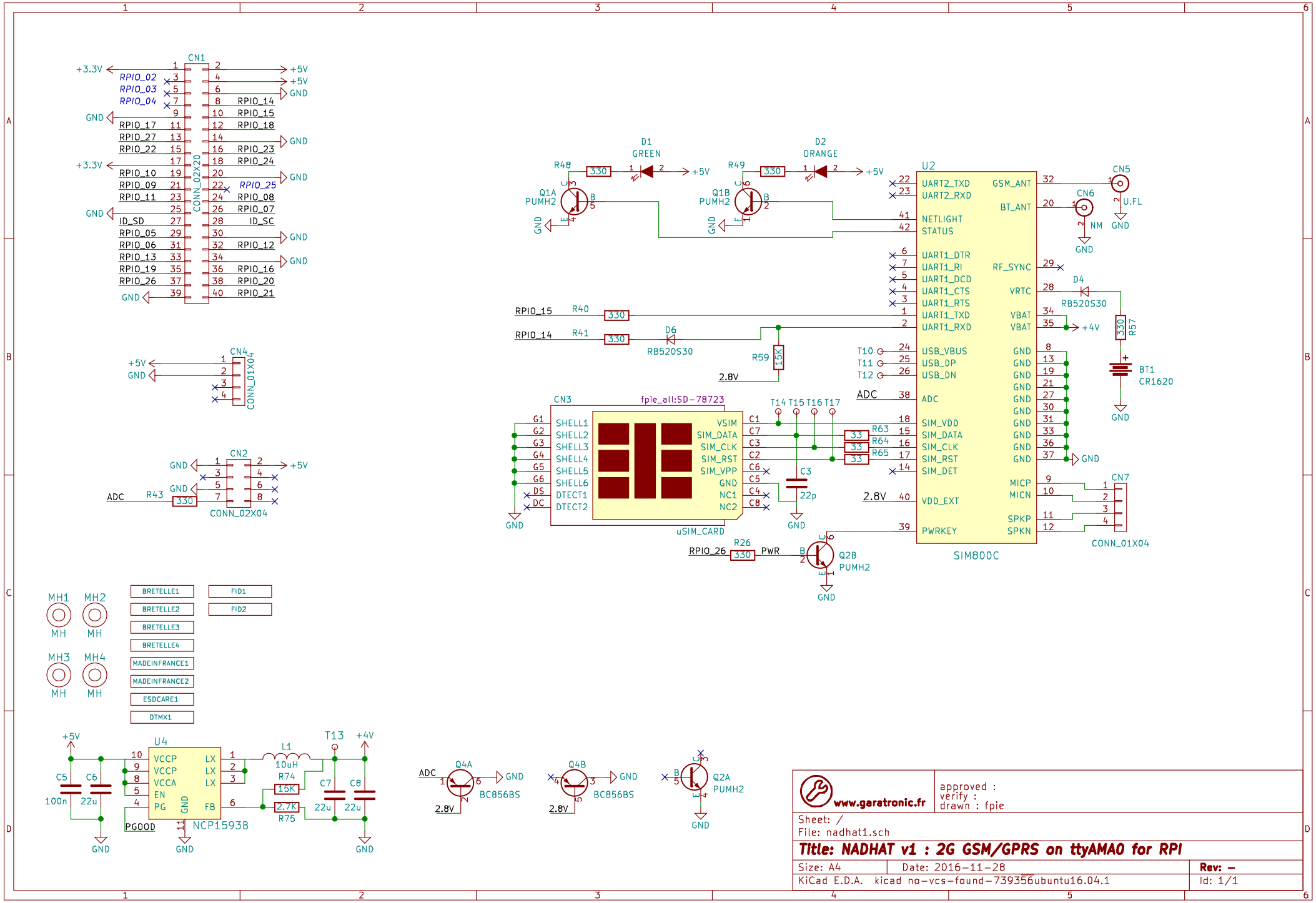

www.garatronic.fr

approved :
verify :
drawn : fpie

Sheet: /
File: nadhat1.sch

Title: NADHAT v1 : 2G GSM/GPRS on ttyAMA0 for RPI

Size: A4	Date: 2016-11-28	Rev: –
KiCad E.D.A. kicad no-vcs-found-739356ubuntu16.04.1		Id: 1/1