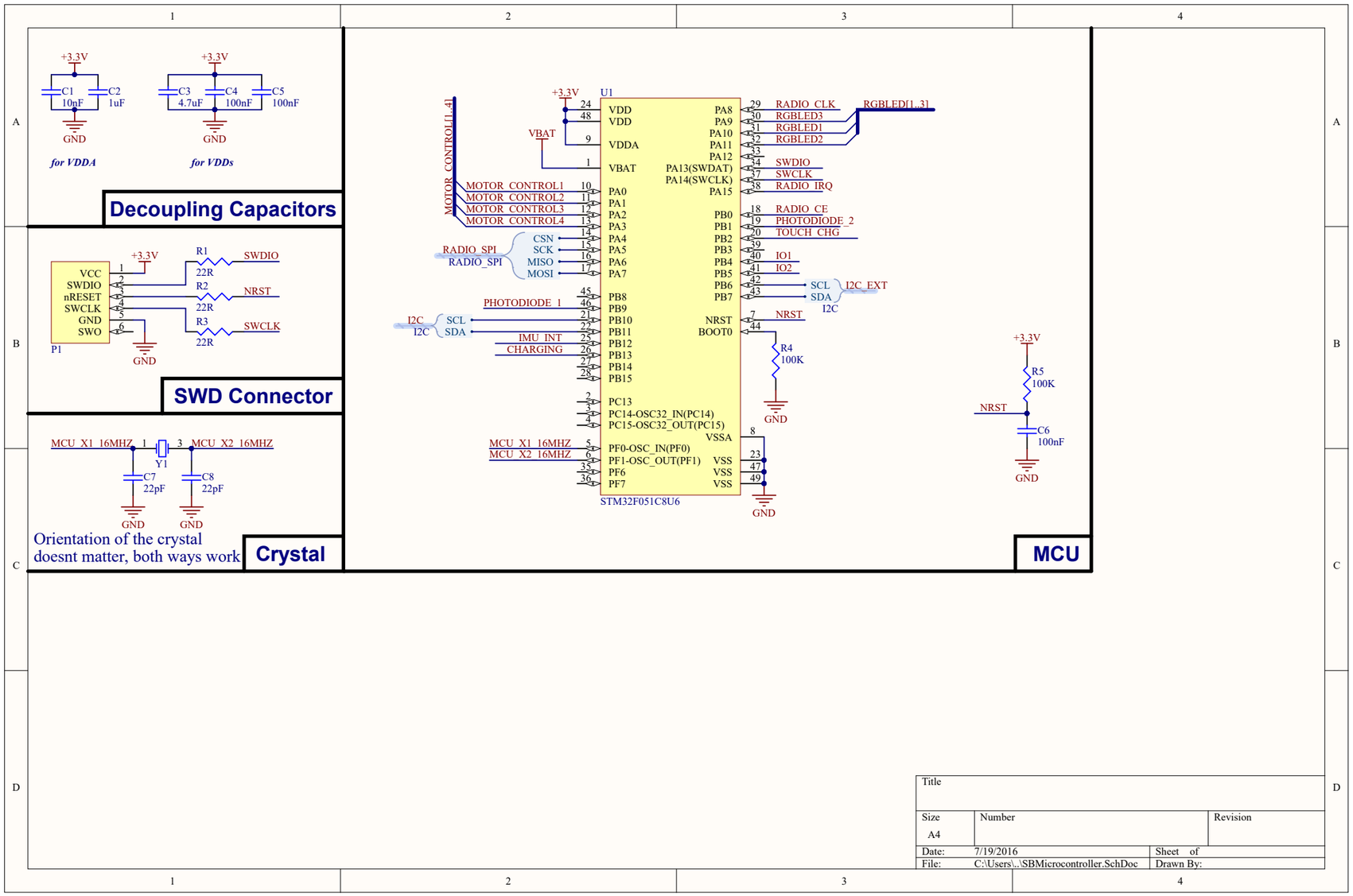

Title		
Size A4	Number	Revision
Date: 7/19/2016	Sheet of	
File: C:\Users\..\SBMicrocontroller.SchDoc	Drawn By:	

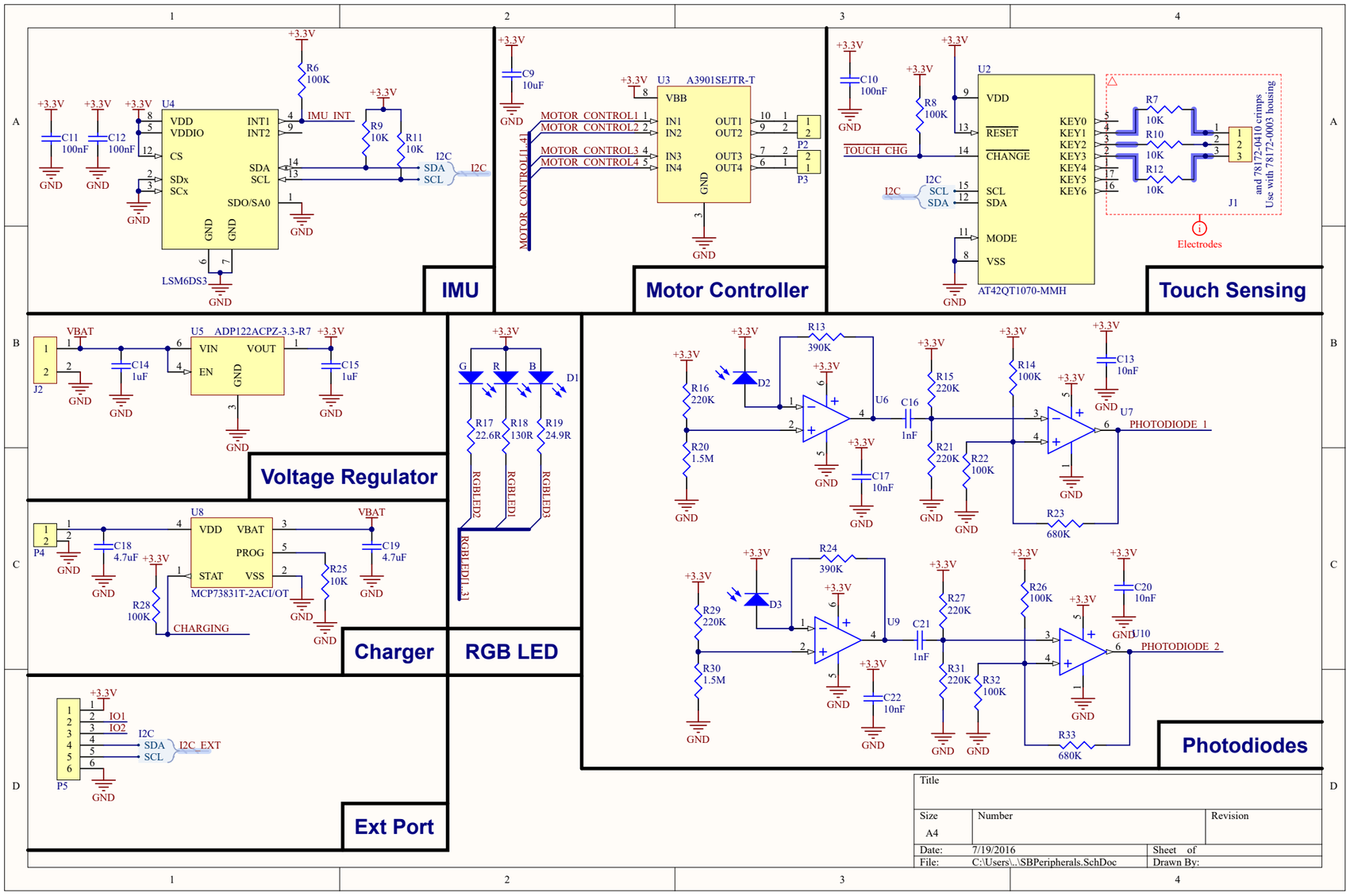

Title		
Size A4	Number	Revision
Date: 7/19/2016		Sheet of
File: C:\Users\..\SBPeripherals.SchDoc		Drawn By:

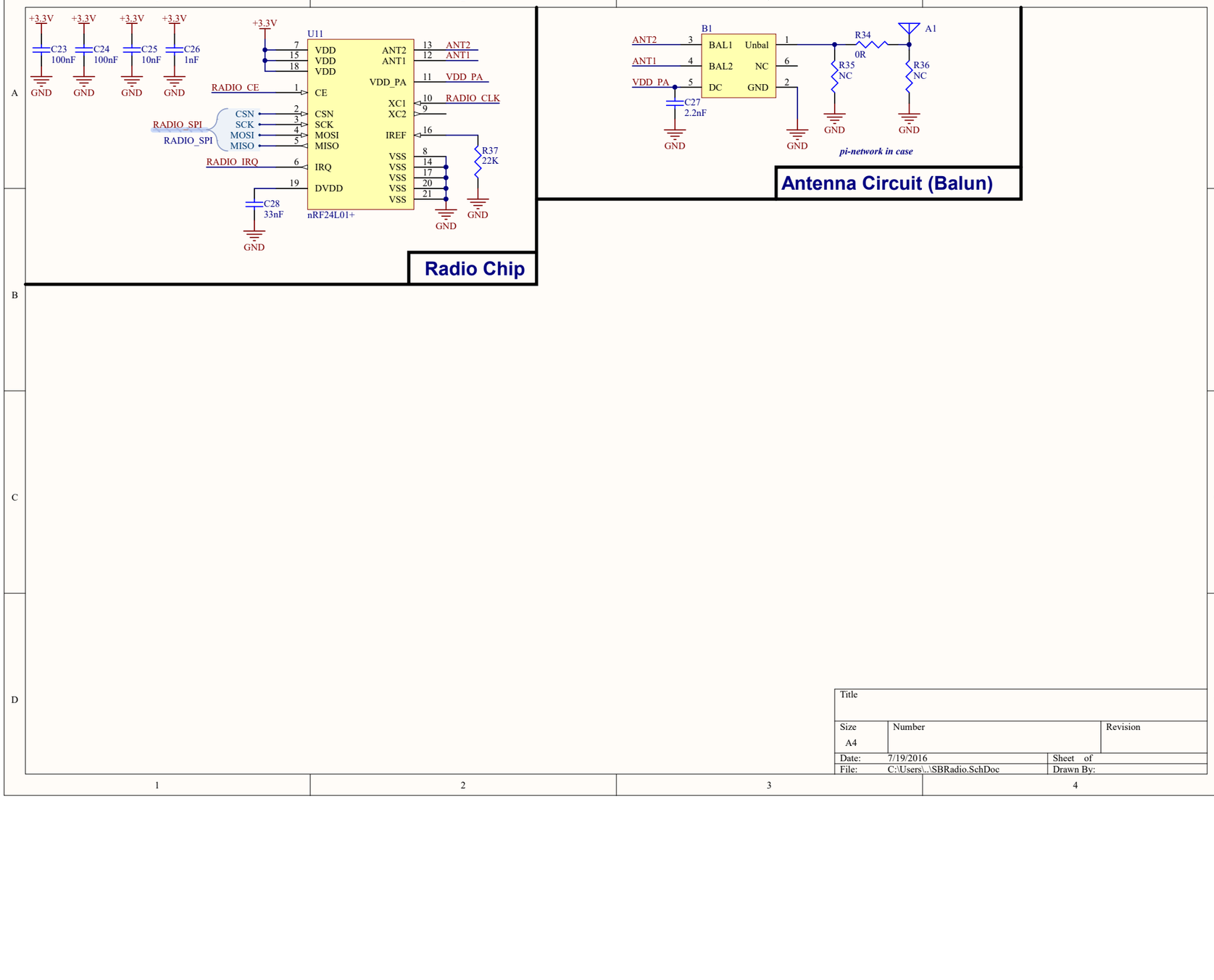

Title		
Size A4	Number	Revision
Date: 7/19/2016	Sheet of	
File: C:\Users\..\SBRadio.SchDoc	Drawn By:	