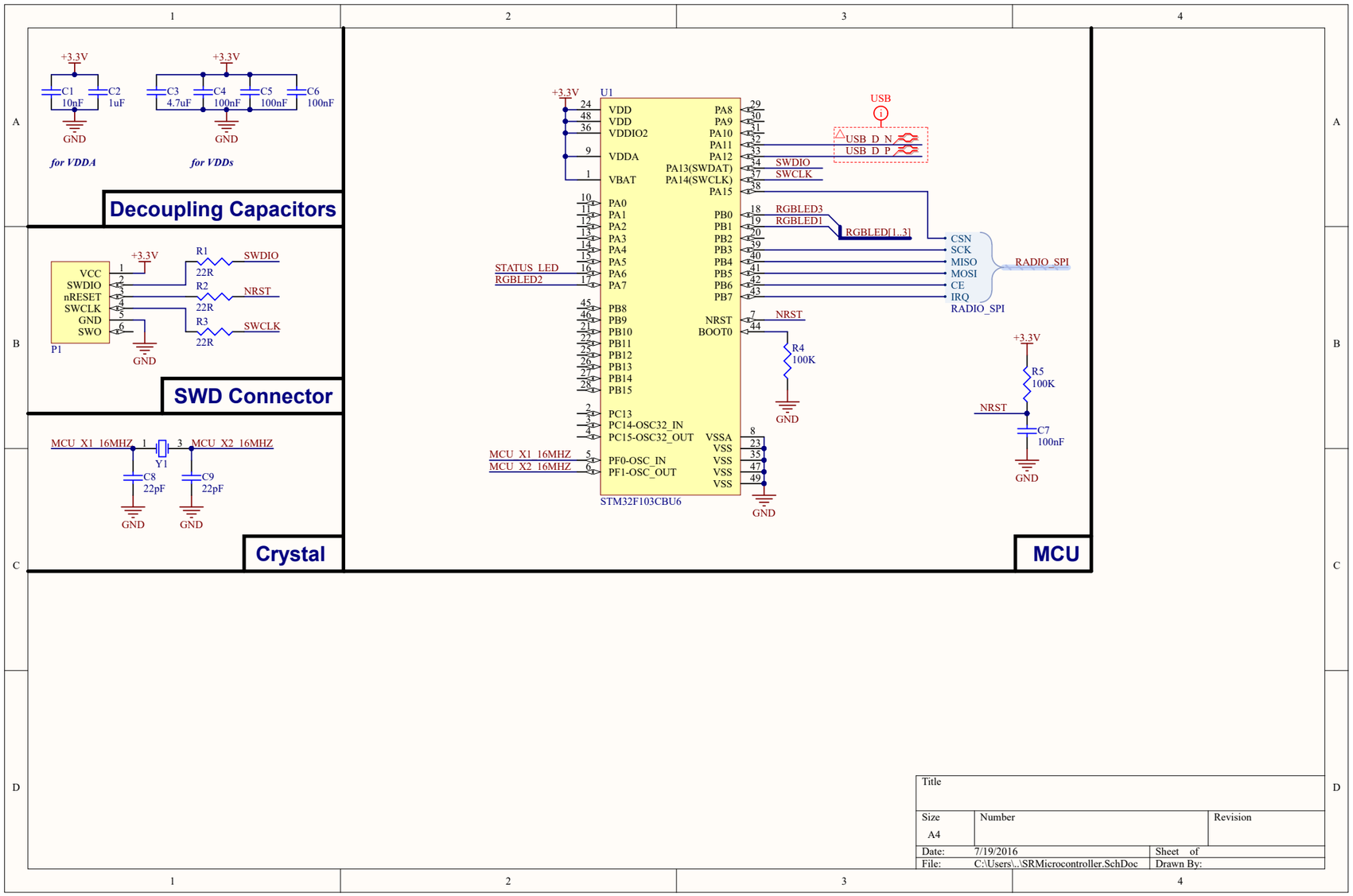

Title		
Size A4	Number	Revision
Date: 7/19/2016	Sheet of	
File: C:\Users\..\SRMicrocontroller.SchDoc	Drawn By:	

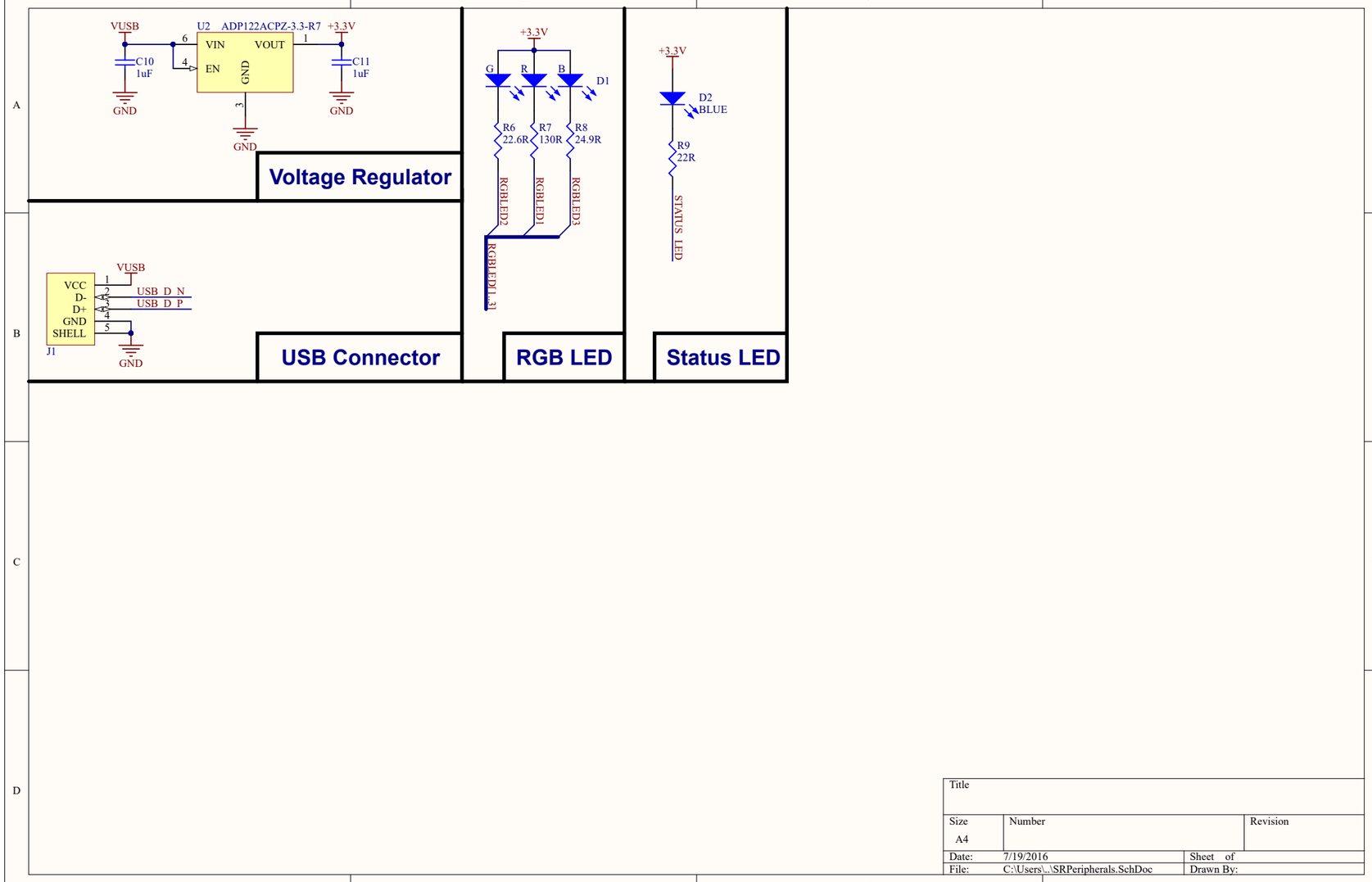

Title		
Size A4	Number	Revision
Date: 7/19/2016	Sheet of	
File: C:\Users\..\SRPeripherals.SchDoc	Drawn By:	

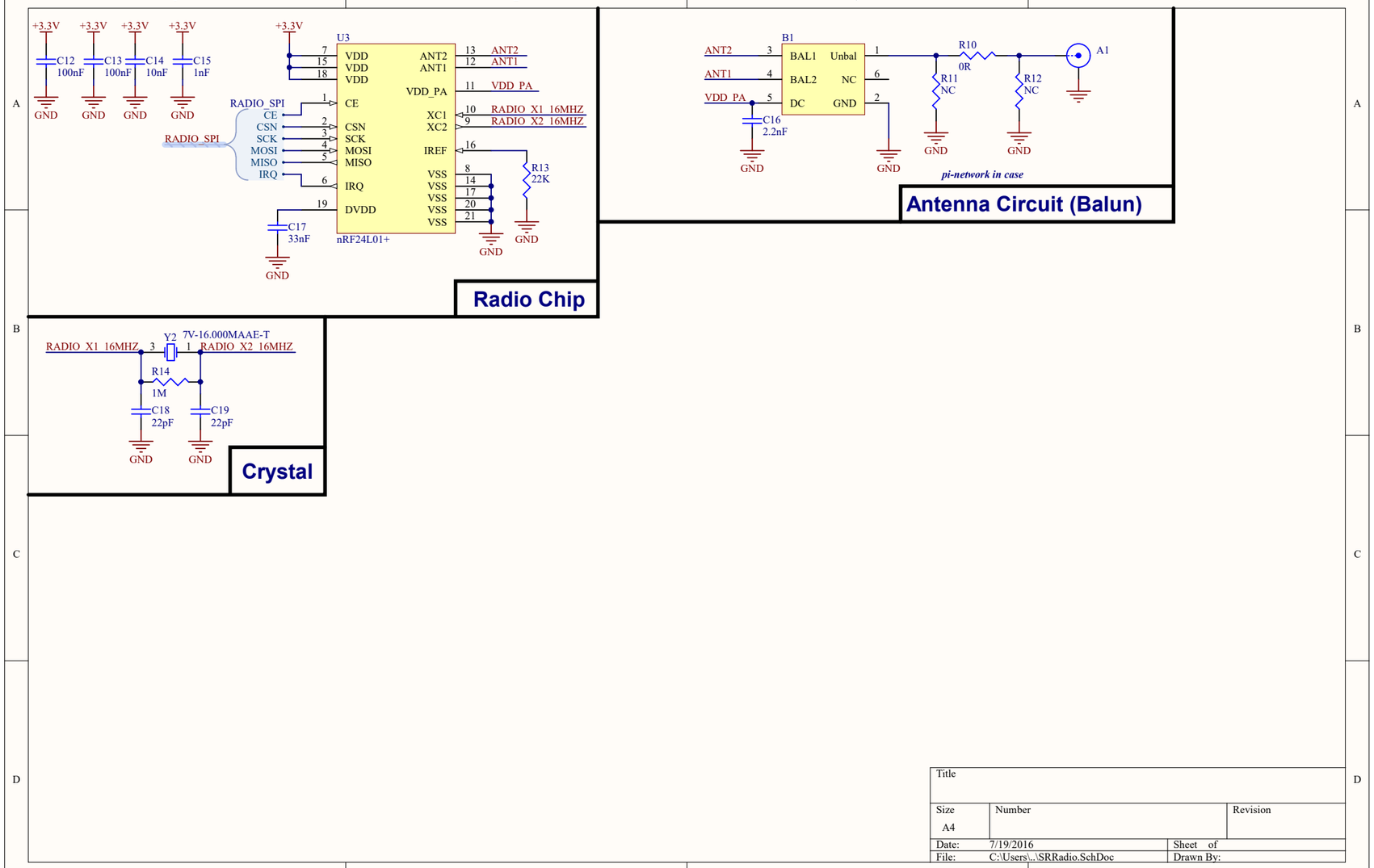

Title		
Size A4	Number	Revision
Date: 7/19/2016	Sheet of	
File: C:\Users\..\SRRadio.SchDoc	Drawn By:	