INPUT

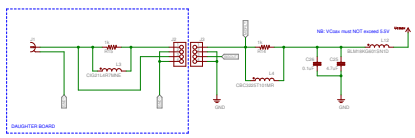

ESTIM

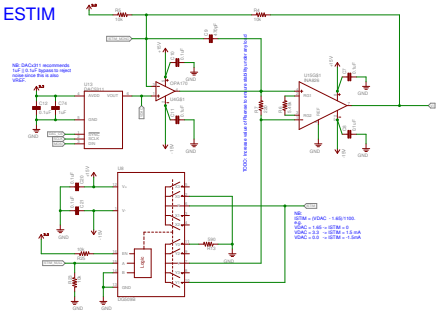

OPTOSTIM

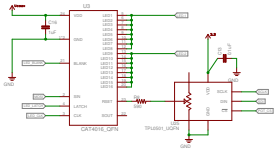

SERIALIZER

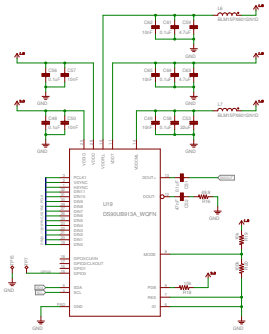

TRACKING

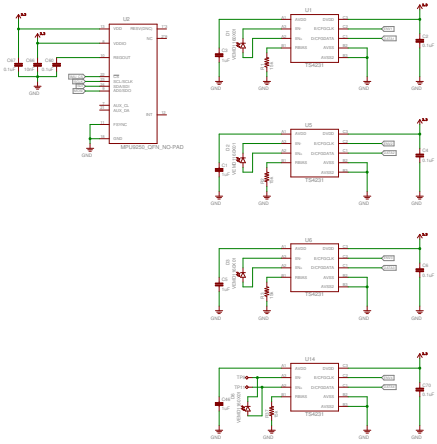

ADC

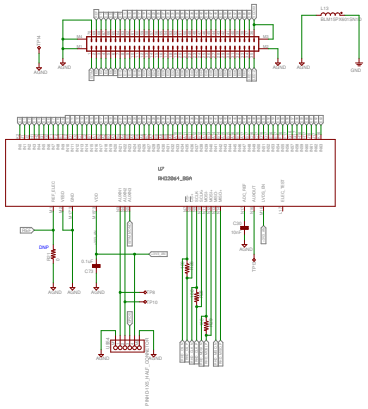

FPGA

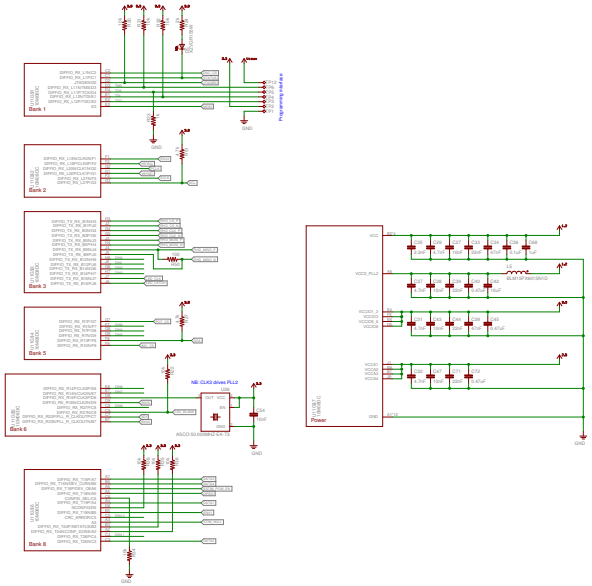

POWER

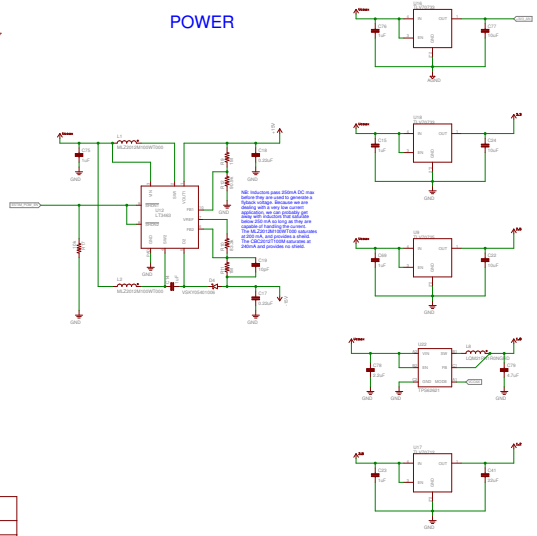

DESIGNED BY: JON NEWMAN, JAKOB VOIGTS	
TITLE: HEADSTAGE-64	
License: CERN OHL v1.2	REV: 1.0
Date: 8/13/18 11:15 AM	Sheet: 1/1