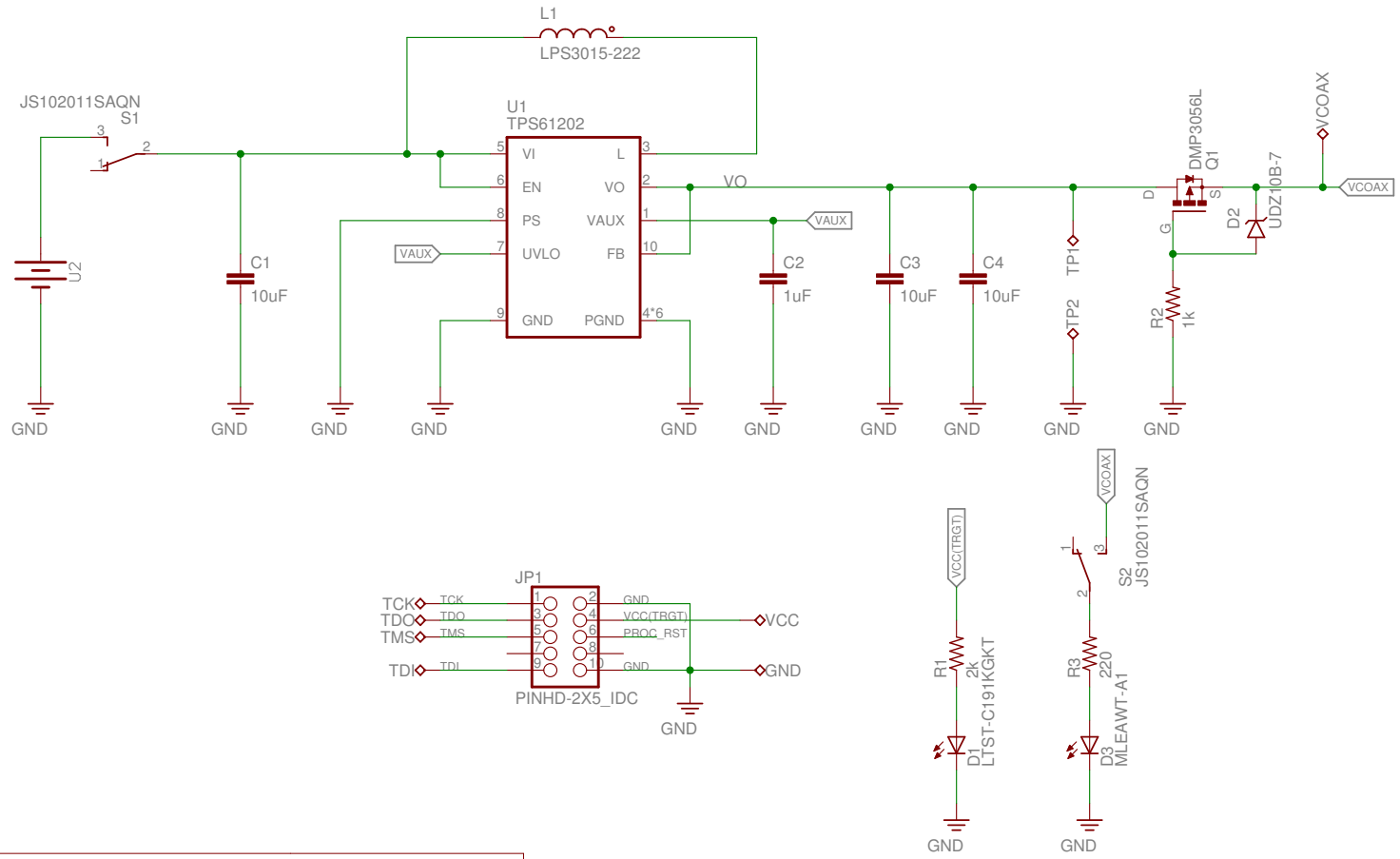

DESIGNED BY: Jon Newman	
TITLE: Headstage Programmer	
License: CERN OHL v1.2	REV: 1.1
Date: 4/15/18 10:08 AM	Sheet: 1/1