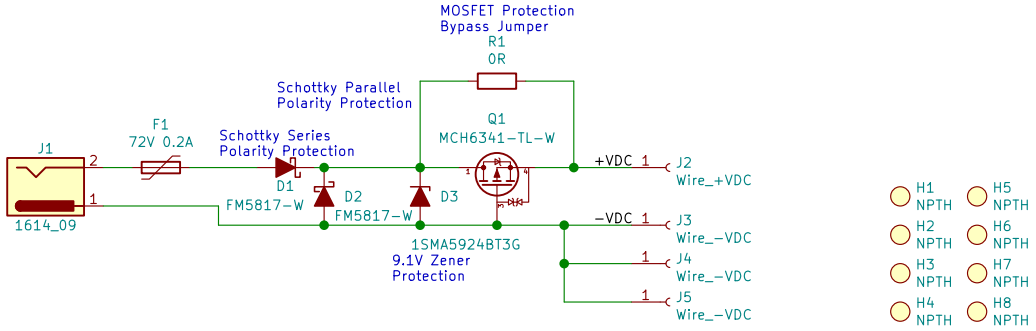

420 ENGHIGHNEERING

Sheet: /
File: #610-000.sch

Title: #610-000-S1A

Size: A4	Date: 2020-01-07	**Rev: A**
KiCad E.D.A. kicad (5.1.4)-1		Id: 1/1