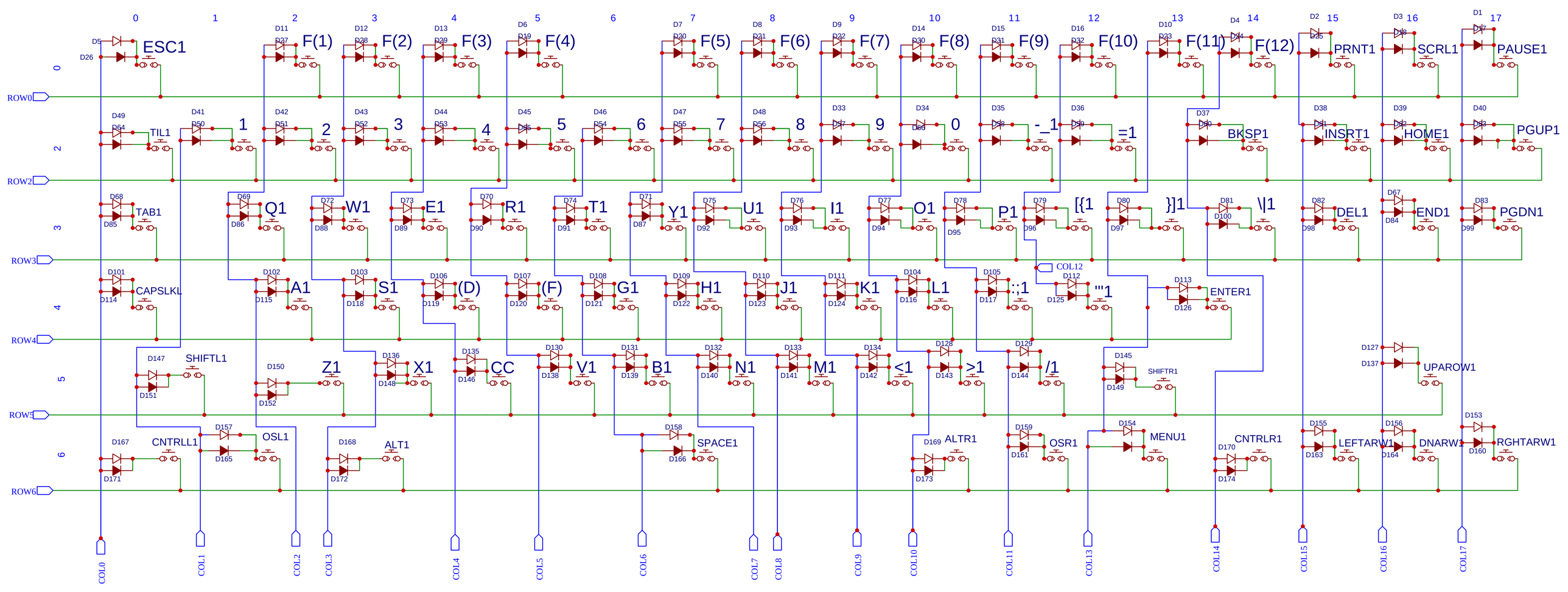
ESC1
F(1)
F(2)
F(3)
F(4)
F(5)
F(6)
F(7)
F(8)
F(9)
F(10)
F(11)
F(12)
PRNT1
SCRL1
PAUSE1
TIL1
1
2
3
4
5
6
7
8
9
0
-_1
=1
BKSP1
INSRT1
HOME1
PGUP1
TAB1
Q1
W1
E1
R1
T1
Y1
U1
I1
O1
P1
[{1
}]1
\|1
DEL1
END1
PGDN1
CAPSLKL
A1
S1
(D)
(F)
G1
H1
J1
K1
L1
:;1
"'1
ENTER1
SHIFTL1
Z1
X1
CC
V1
B1
N1
M1
<1
>1
/1
SHIFTR1
UPAROW1
CNTRLL1
OSL1
ALT1
SPACE1
ALTR1
OSR1
MENU1
CNTRLR1
LEFTARW1
DNARW1
RGHTARW1
ROW0
ROW2
ROW3
ROW4
ROW5
ROW6
COL0
COL1
COL2
COL3
COL4
COL5
COL6
COL7
COL8
COL9
COL10
COL11
COL12
COL13
COL14
COL15
COL16
COL17

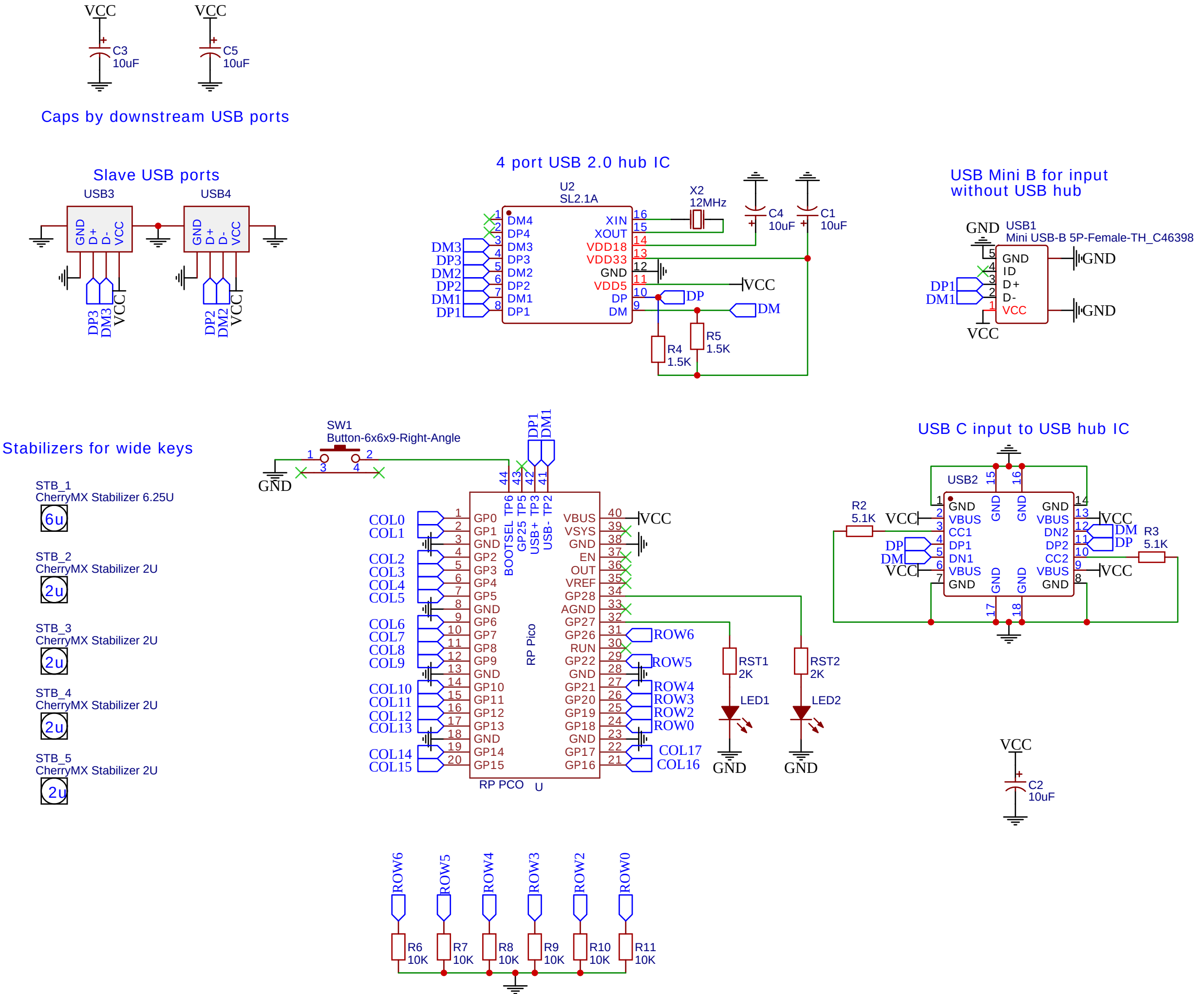
VCC
C3
10uF
VCC
C5
10uF
Caps by downstream USB ports
Slave USB ports
USB3
USB4
GND
D+
D-
VCC
DP3
DM3
VCC
DP2
DM2
VCC
4 port USB 2.0 hub IC
U2
SL2.1A
X2
12MHz
C4
10uF
C1
10uF
DM4
DP4
DM3
DP3
DM2
DP2
DM1
DP1
XIN
XOUT
VDD18
VDD33
GND
VDD5
DP
DM
VCC
DP
DM
R4
1.5K
R5
1.5K
USB Mini B for input
without USB hub
GND
USB1
Mini USB-B 5P-Female-TH_C46398
GND
ID
D+
D-
VCC
DP1
DM1
GND
GND
VCC
Stabilizers for wide keys
STB_1
CherryMX Stabilizer 6.25U
6u
STB_2
CherryMX Stabilizer 2U
2u
STB_3
CherryMX Stabilizer 2U
2u
STB_4
CherryMX Stabilizer 2U
2u
STB_5
CherryMX Stabilizer 2U
2u
SW1
Button-6x6x9-Right-Angle
GND
DP1
DM1
BOOTSEL TP6
GP25 TP5
USB+ TP3
USB- TP2
COL0
COL1
COL2
COL3
COL4
COL5
COL6
COL7
COL8
COL9
COL10
COL11
COL12
COL13
COL14
COL15
GP0
GP1
GND
GP2
GP3
GP4
GP5
GND
GP6
GP7
GP8
GP9
GND
GP10
GP11
GP12
GP13
GND
GP14
GP15
RP Pico
VBUS
VSYS
GND
EN
OUT
VREF
GP28
AGND
GP27
GP26
RUN
GP22
GND
GP21
GP20
GP19
GP18
GND
GP17
GP16
VCC
ROW6
ROW5
ROW4
ROW3
ROW2
ROW0
COL17
COL16
RST1
2K
RST2
2K
LED1
LED2
GND
GND
RP PCO
U
USB C input to USB hub IC
USB2
R2
5.1K
VCC
DP
DM
VCC
GND
VBUS
CC1
DP1
DN1
VBUS
GND
DN2
DP2
CC2
VBUS
GND
DM
DP
R3
5.1K
VCC
VCC
VCC
C2
10uF
ROW6
ROW5
ROW4
ROW3
ROW2
ROW0
R6
10K
R7
10K
R8
10K
R9
10K
R10
10K
R11
10K