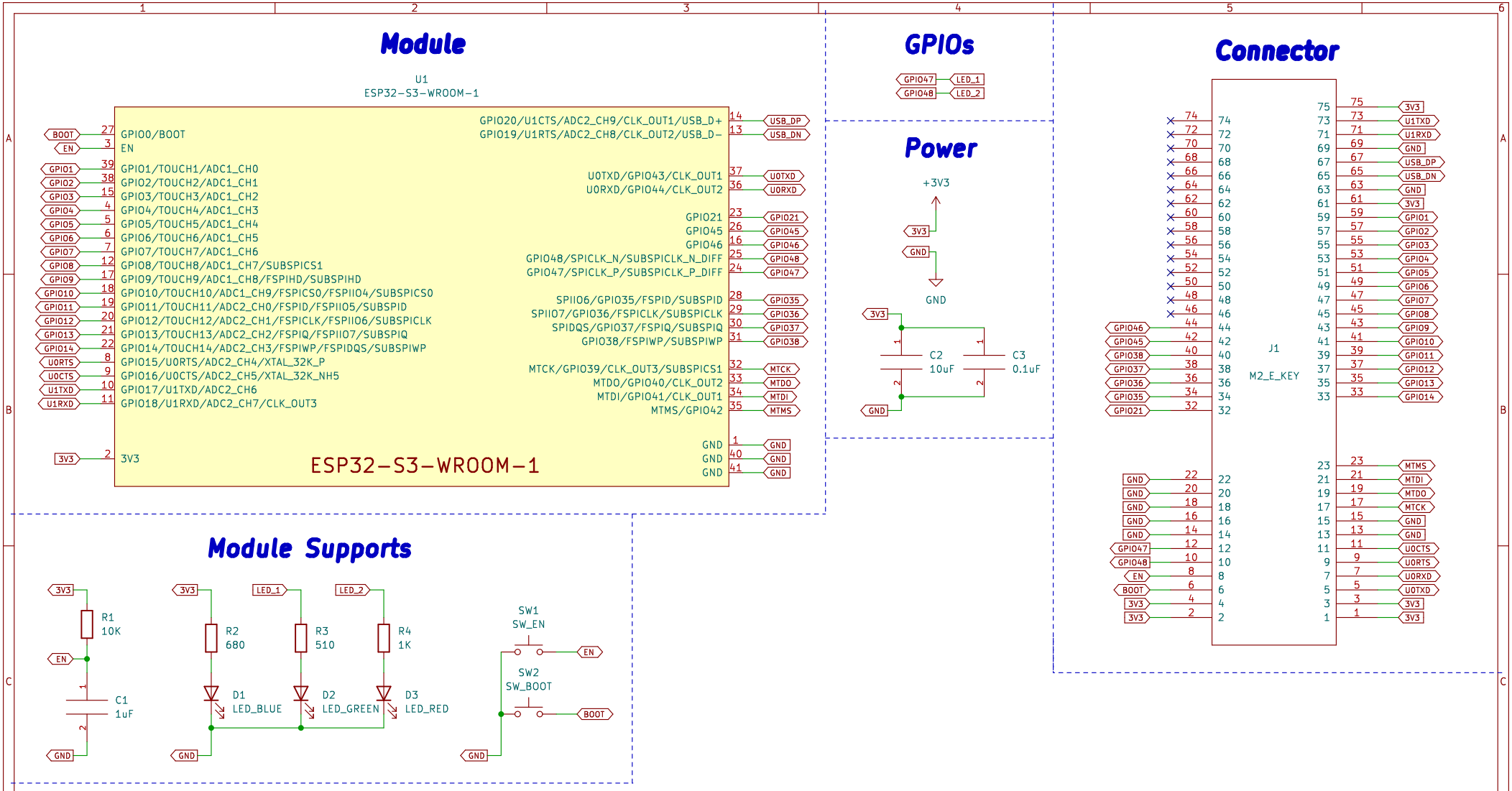

Please note ESP32-S3-WROOM-1 (None U) module won't fit on 2230 length board
Do NOT install this module in a normal computer!
This desing is not meant to be used in standard M.2 sockets.

BlendEthanol by BZH Embedded Solutions

Sheet: /
File: CORE_ESP32S3U_NGFF_KEY_E.kicad_sch

Title: ESP32-S3-WROOM-1[U] M.2(E-Key) Module

Size: A4	Date: 2022-08-15	**Rev: 1.0**
KiCad E.D.A. eeschema (6.0.5)		Id: 1/1