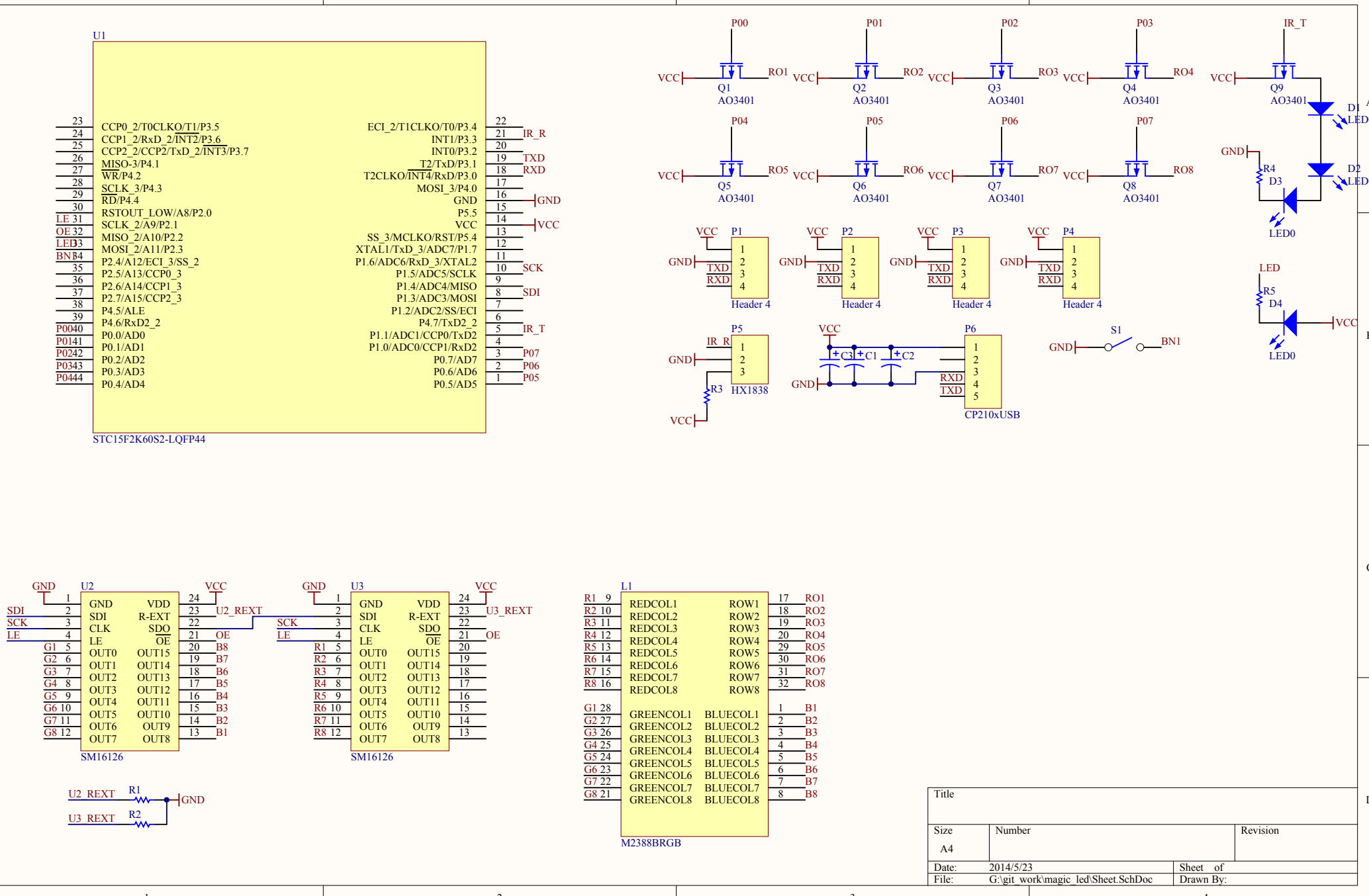
U1
STC15F2K60S2-LQFP44
CCP0_2/T0CLKO/T1/P3.5
CCP1_2/RxD_2/INT2/P3.6
CCP2_2/CCP2/TxD_2/INT3/P3.7
MISO-3/P4.1
WR/P4.2
SCLK_3/P4.3
RD/P4.4
RSTOUT_LOW/A8/P2.0
SCLK_2/A9/P2.1
MISO_2/A10/P2.2
MOSI_2/A11/P2.3
P2.4/A12/ECI_3/SS_2
P2.5/A13/CCP0_3
P2.6/A14/CCP1_3
P2.7/A15/CCP2_3
P4.5/ALE
P4.6/RxD2_2
P0.0/AD0
P0.1/AD1
P0.2/AD2
P0.3/AD3
P0.4/AD4
ECI_2/T1CLKO/T0/P3.4
INT1/P3.3
INT0/P3.2
T2/TxD/P3.1
T2CLKO/INT4/RxD/P3.0
MOSI_3/P4.0
GND
P5.5
VCC
SS_3/MCLKO/RST/P5.4
XTAL1/TxD_3/ADC7/P1.7
P1.6/ADC6/RxD_3/XTAL2
P1.5/ADC5/SCLK
P1.4/ADC4/MISO
P1.3/ADC3/MOSI
P1.2/ADC2/SS/ECI
P4.7/TxD2_2
P1.1/ADC1/CCP0/TxD2
P1.0/ADC0/CCP1/RxD2
P0.7/AD7
P0.6/AD6
P0.5/AD5
IR_R
TXD
RXD
SCK
SDI
IR_T
P07
P06
P05
LE
OE
LED
BN
P00
P01
P02
P03
P04
P05
P06
P07
Q1 AO3401
Q2 AO3401
Q3 AO3401
Q4 AO3401
Q5 AO3401
Q6 AO3401
Q7 AO3401
Q8 AO3401
Q9 AO3401
RO1
RO2
RO3
RO4
RO5
RO6
RO7
RO8
D1 LED0
D2 LED0
R4
D3
LED0
P1 Header 4
P2 Header 4
P3 Header 4
P4 Header 4
P5 HX1838
R3
P6 CP210xUSB
C1
C2
C3
S1
BN1
R5
D4
U2 SM16126
U3 SM16126
U2_REXT
U3_REXT
R1
R2
L1 M2388BRGB
REDCOL1
REDCOL2
REDCOL3
REDCOL4
REDCOL5
REDCOL6
REDCOL7
REDCOL8
ROW1
ROW2
ROW3
ROW4
ROW5
ROW6
ROW7
ROW8
GREENCOL1
GREENCOL2
GREENCOL3
GREENCOL4
GREENCOL5
GREENCOL6
GREENCOL7
GREENCOL8
BLUECOL1
BLUECOL2
BLUECOL3
BLUECOL4
BLUECOL5
BLUECOL6
BLUECOL7
BLUECOL8
Title
Size A4
Number
Revision
Date: 2014/5/23
Sheet of
File: G:\git_work\magic_led\Sheet.SchDoc
Drawn By: