Heaven's light is our guide

RAJSHAHI UNIVERSITY OF ENGINEERING & TECHNOLOGY
Department of Mechatronics Engineering

Assignment

Tittle: Using Modern Design and Simulation Software: Design and Performance Analysis of a Spur Gear

Submitted By
Homayra Mobesshira Hemu
ID: 2008005
4thYear Odd Semester
Department of Mechatronics Engineering
Rajshahi University of Engineering & Technology, Rajshahi-6204.

Submitted To:
Md. Robiul Islam
Assistant Professor

Md. Sakib Hassan Chowdhury
Lecturer
Department of Mechatronics Engineering
Rajshahi University of Engineering **&** Technology, Rajshahi-6204.

Date of Submission 21 October, 2025

MTE 4107

Design of Mechatronic Systems

Tittle:Using Modern Design and Simulation Software: Design and Performance Analysis of a Spur Gear

Introduction:

Gears are fundamental components in mechanical power transmission systems, used to transfer motion and torque between rotating shafts efficiently. Among different types of gears, spur gears are the simplest and most widely used, due to their ease of design and high efficiency. Proper gear design ensures reliable operation under variable loads, prevents tooth failure, and enhances the longevity of mechanical systems.

This study focuses on designing a spur gear pair using SolidWorks, considering both geometrical and material constraints. The aim is to tackle complex engineering problems related to gear strength, stress distribution, fatigue, and efficiency, while adhering to mechanical design standards such as ISO. Through simulation, we can predict gear behavior under dynamic loads and optimize the design for durability and manufacturability.

Problem Statement :

Design a spear gear pair to efficiently transmit mechanical power between two parallel shaft at a specified torque and speed. This design must ensure reliable operation under dynamic loading condition without failure due to bending and surface fatigue. The gear system should be optimized for strength durability and manufacturability while confirming to applicable mechanical design standard such as ISO. All geometrical material & operational constraint must be considered to avoid gear tooth failure like wear, pitting and under cutting.

Parameters:
No. of teeth=20-25
Module=assume yourself
Pressure angle = 20 or 14.5
Pitch circle=90-120
Addendum=4-6 mm
Dedendum=4-6 mm
Face Width= 30-25mm
Material= varies
Torque= 60-120 Nm
Analyze stress and fatigue.

Objectives of the Study:

- To design a spur gear pair that transmits specified torque efficiently between two parallel shafts.
- To perform stress and fatigue analysis to ensure reliable operation under dynamic loads.
- To study the influence of material, geometry, and loading conditions on gear performance.
- To optimize the gear design for strength, durability, and manufacturability, following ISO standards.

Required Software :

SolidWorks

Methodology :

Parameters : In this study, spur gears were modeled in SolidWorks with the following parameters:

- Module: 5 mm
- Number of Teeth: 24 (gear 1) and 20 (gear 2)
- Shaft Diameter: 30 mm
- Material: Alloy Steel

A torque of 100 Nm was applied at 400 rpm, and static stress analysis was first performed to obtain maximum stress levels. This was followed by fatigue analysis using an S-N curve with stress values (600, 400, 300, 200, 150, 100 MPa) and corresponding life cycles. The fatigue study was set up with R = 0 load ratio, static loading type, and scale factor of 0.6 to simulate realistic loading conditions.

Stress Analysis:

1.Gear Design and Setup

- The first spur gear was designed using Module = 5 and 24 teeth, with hub features on both sides and a shaft diameter of 30 mm.
- The second spur gear was modeled with the same parameters but with 20 teeth.
- Pitch circle diameters were determined as $d1=m\times z1=120$ mm, and $d2=m\times z2=100$
- Alloy steel was selected as the material for both gears.

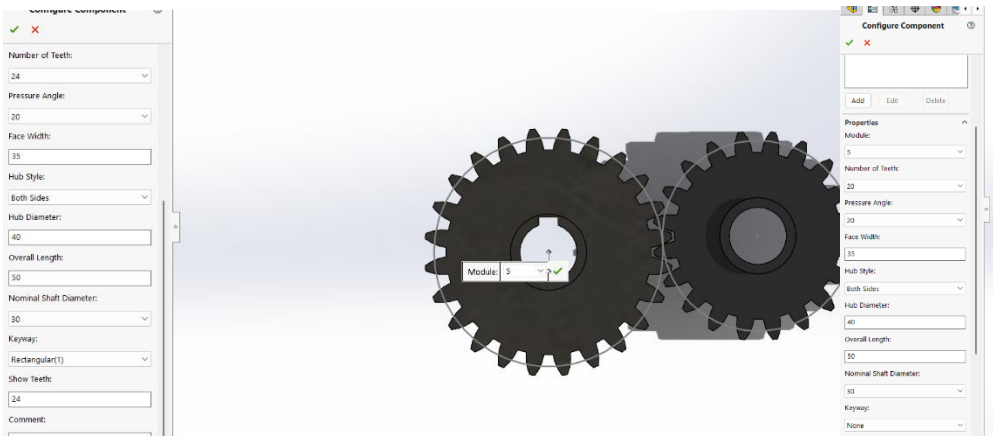

Fig 01 :specifications

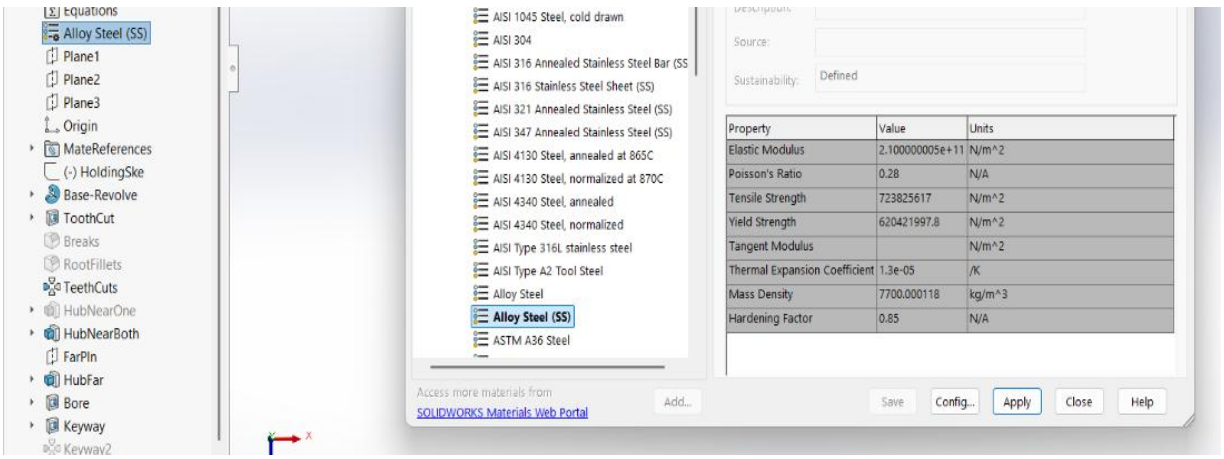

Fig: 02 Material

2. Assembly and Motion Setup

- The two gears were inserted into an assembly and aligned using mate relationships to ensure proper meshing.
- A rectangular shaft was defined for mounting, and the gears were positioned on parallel shafts.
- Physical Dynamics in SolidWorks Motion was declared to verify smooth meshing.
- The driving gear was rotated at 400 RPM to confirm motion transfer between the pair.

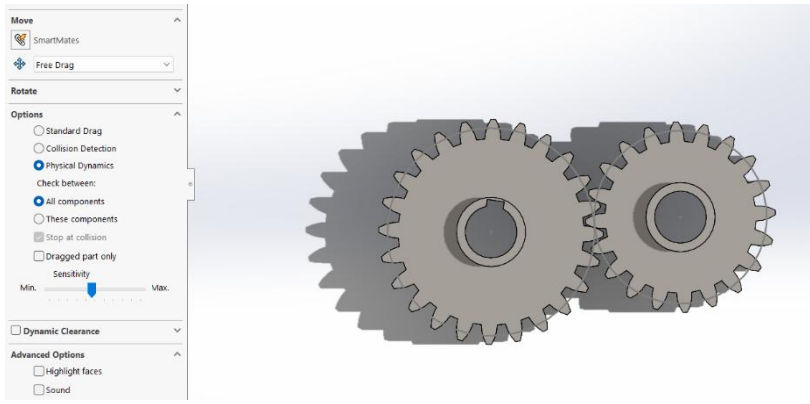

Fig 03: setup Physical dynamics

3. Stress Analysis Study Creation

- A new Static Stress Study was created under the SolidWorks Simulation environment.
- Component interaction was applied to define the contact between the two gears as global interaction (allowing realistic load transfer).
- Fixtures were applied to the gear shafts to simulate actual support conditions.
- A torque load of 100 N·m was applied to the driving gear to replicate the design loading condition.

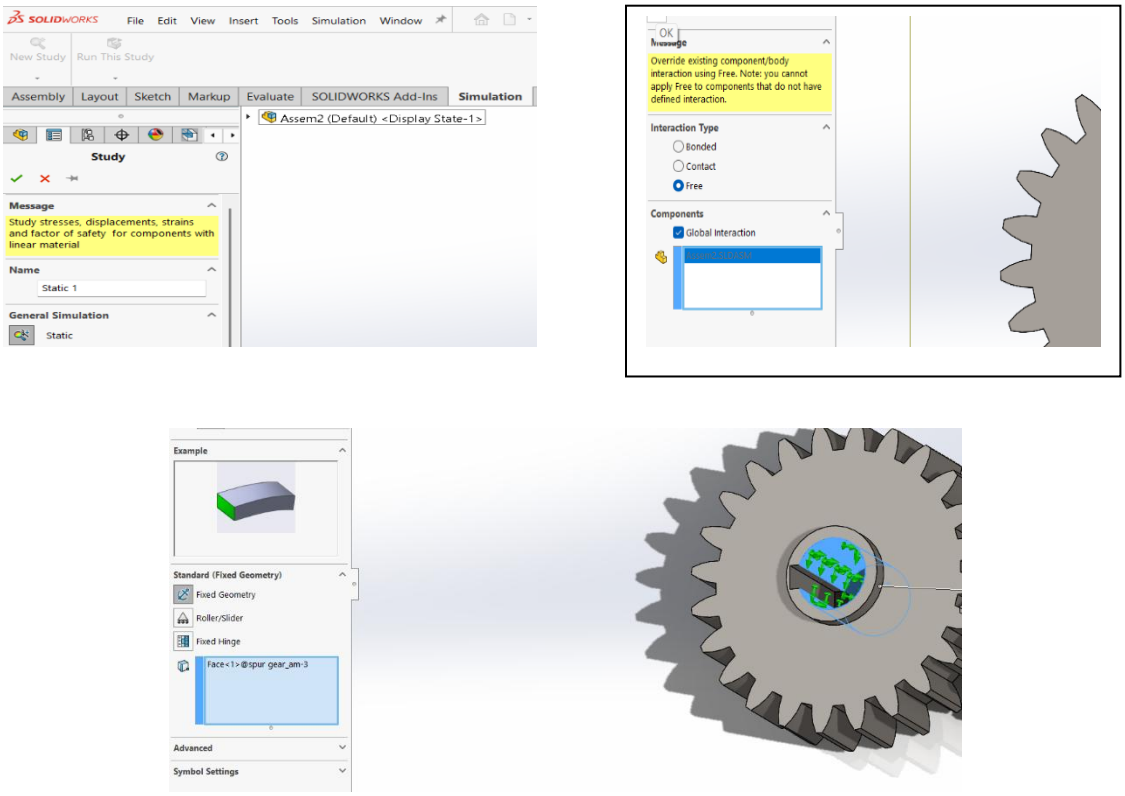

Fig 04 : Static analysis , component interaction and fixure of first gear

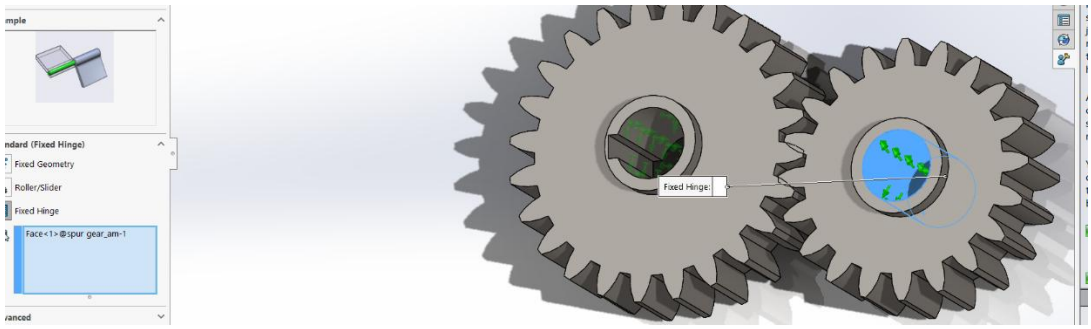

Fig 05: add fixure of scoend gear

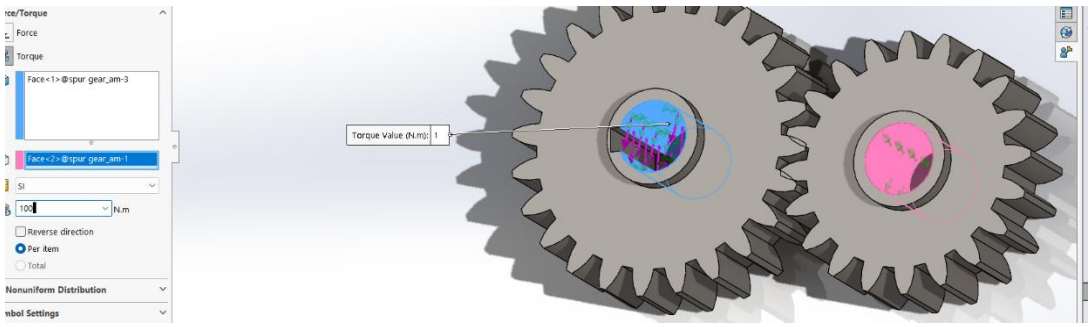

Fig 06: use 100 Nm torque

4. Meshing and Solver Setup

- The gear bodies were discretized using mesh generation to divide the model into finite elements for analysis.
- Mesh control was applied to the gear teeth region to ensure accurate stress distribution at the contact points.

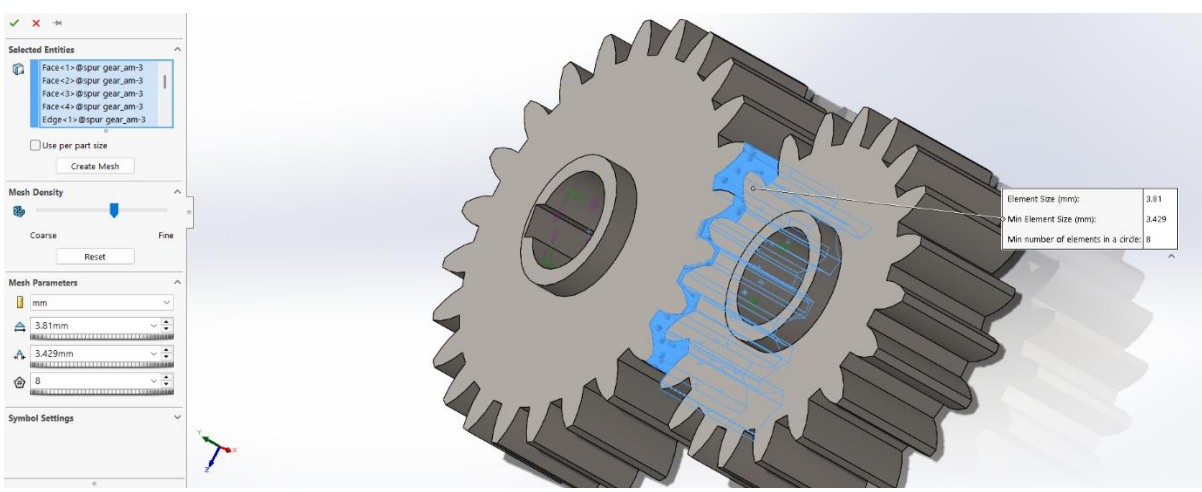

Fig 07: select mesh surface

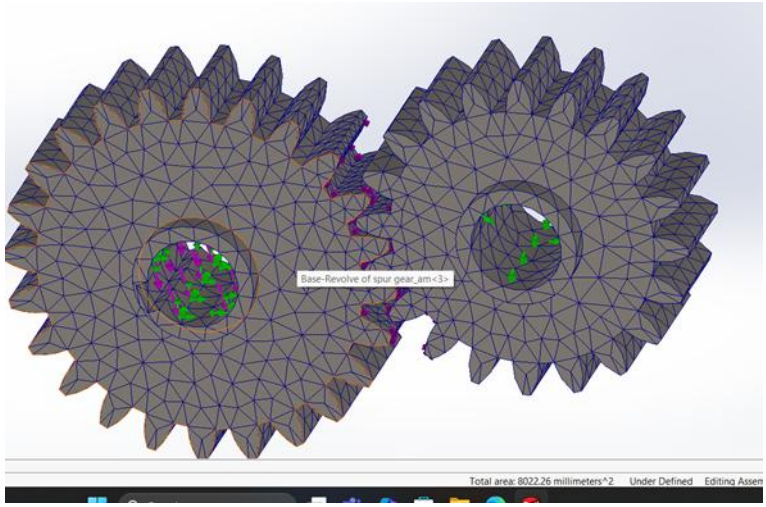

Fig 08: Apply mesh control

5. Simulation Execution

- The analysis was executed with the defined constraints, loads, and material properties.
- The solver computed the resulting deformation and stress distribution within the gear pair.

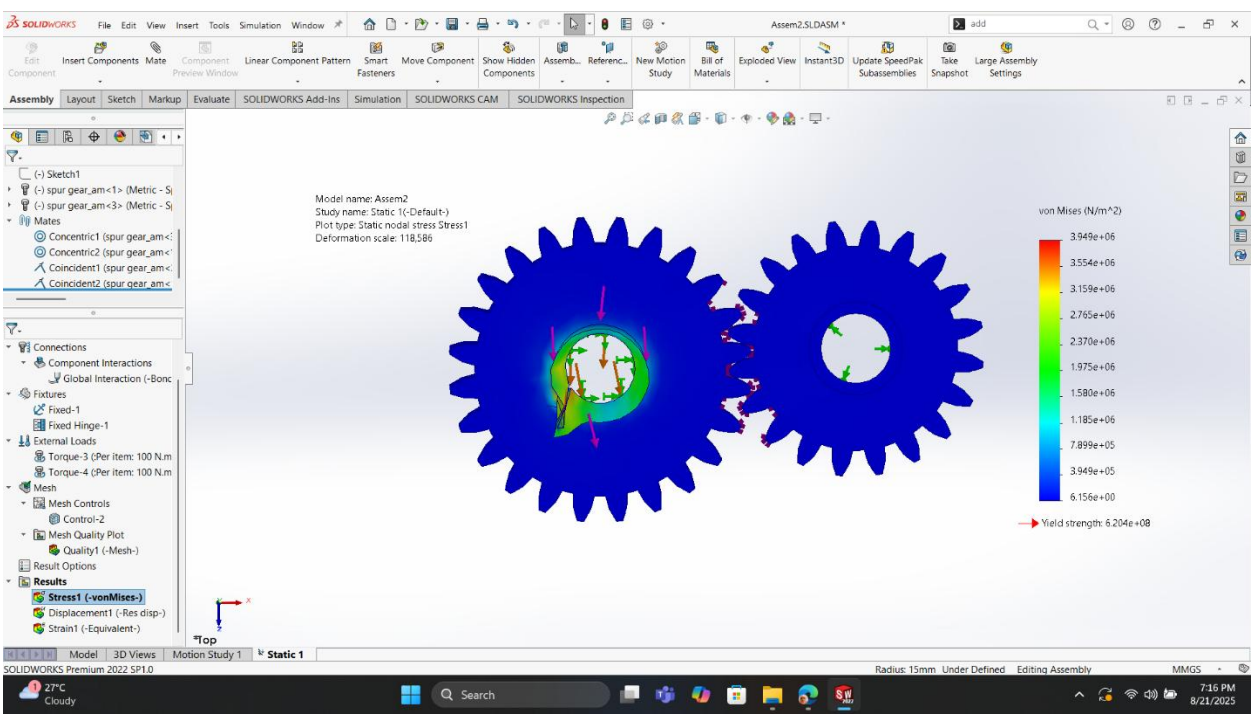

Fig 09: Stress analysis

Results :

The von Mises stress distribution was obtained across the gear teeth.

- The maximum deformation scale was observed at approximately 118,586 (N/m² equivalent stress result unit from SolidWorks)**,** indicating the critical regions of load concentration at the tooth contact zone.
- The analysis confirmed that the gears sustain the applied torque within the limits of alloy steel without structural failure.

Fatigue Analysis:

1.Base static solution as reference state

- Use the converged static study (contacts, fixtures, mesh, material) which contains nodal stress results for the applied nominal torque (100 N·m). These static stresses provide the baseline stress field for fatigue loading.
- Add a fatigue load event that references the static study and apply Scale = 0.6 (this multiplies the static stress field by 0.6, representing the 60 N·m effective loading amplitude).

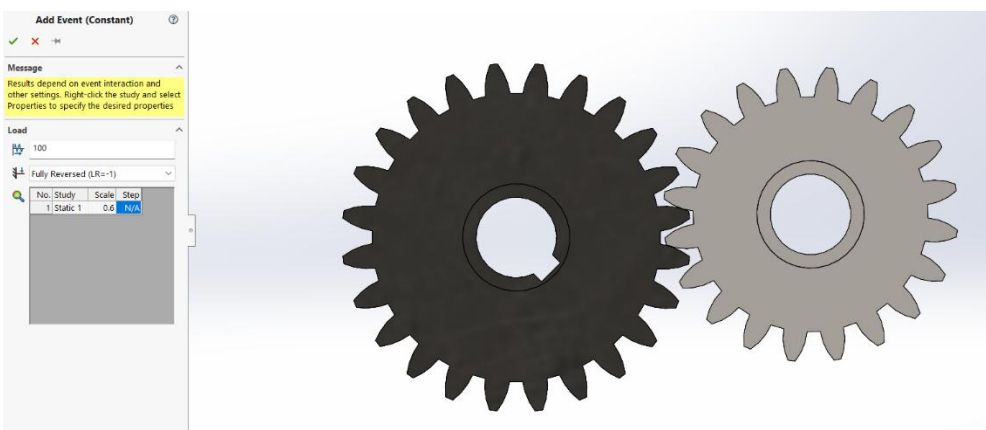

Fig 10: Basic Static solution

2. Define S–N curve and corrections

- Import the S–N table (stress amplitude S vs. cycles N) already defined (values based on UTS = 850 MPa: 765, 595, 510, 425, 382.5, 340 MPa at 10^3 – 10^8 cycles).
- Set loading ratio R=0 (pulsating tension-to-zero loading at the tooth root).

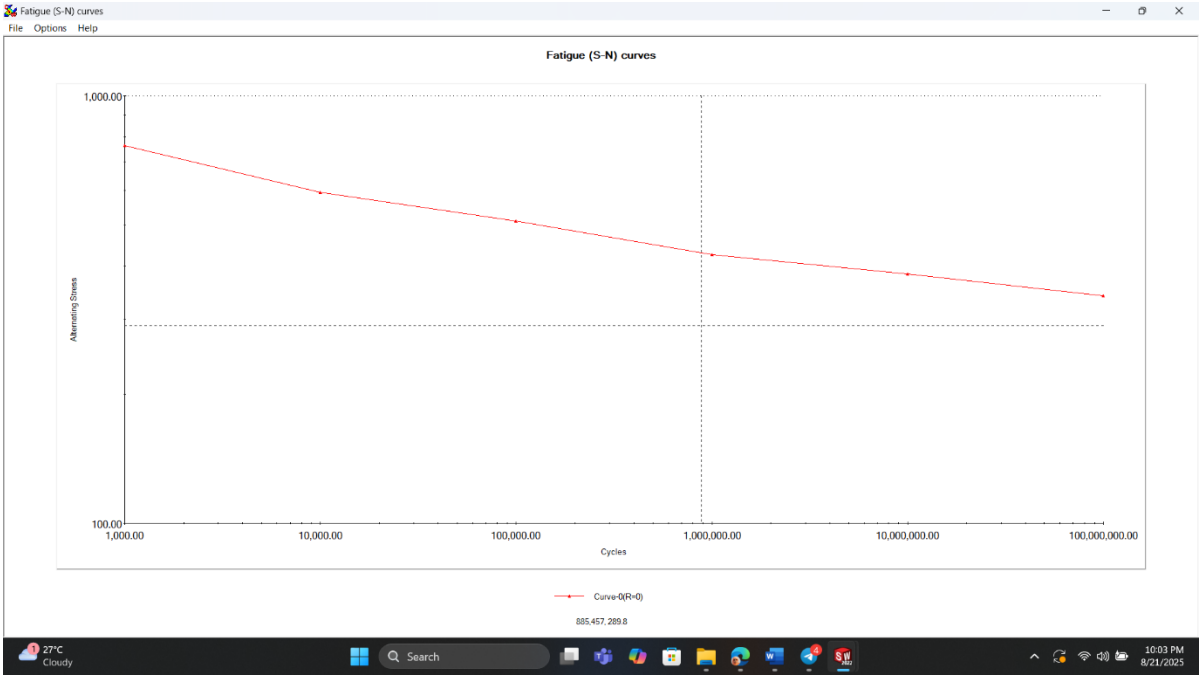

Fig 11: S-N Curve

Results:

- Life (N): number of cycles until fatigue failure at each location.
- Damage: fraction of life consumed by the specified mission (damage = 1 → failure).

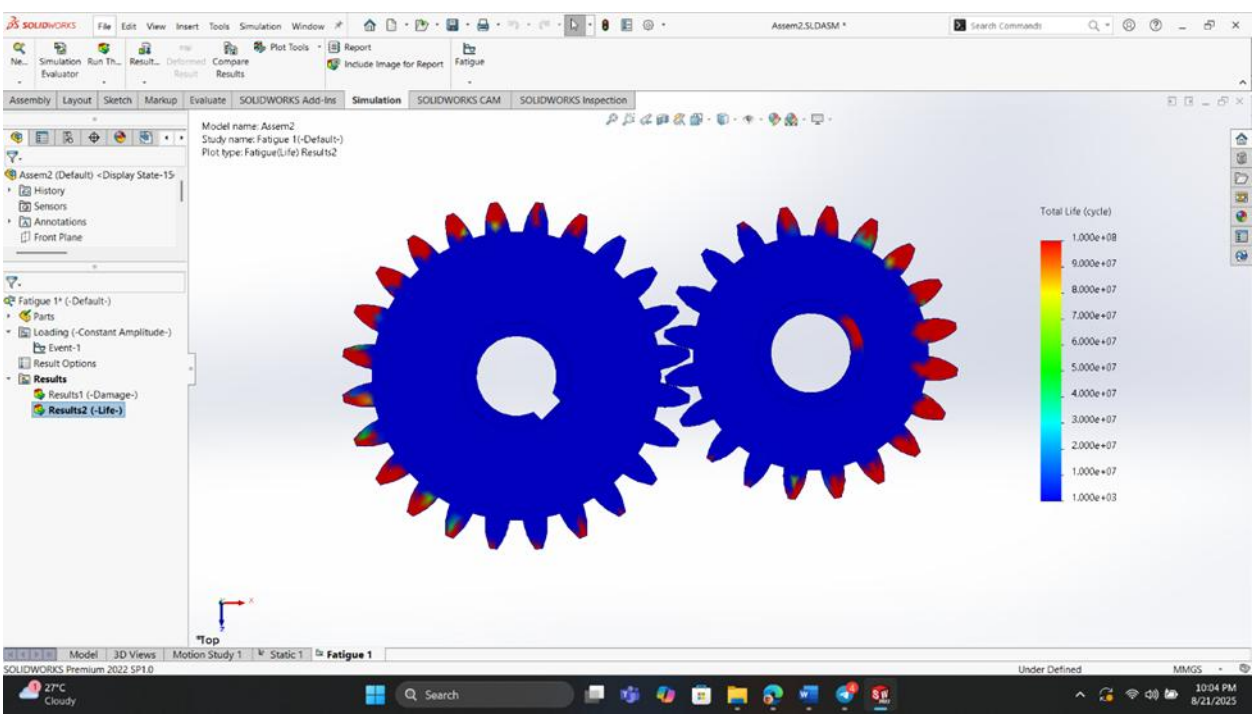

Fig 11: Life Cycle

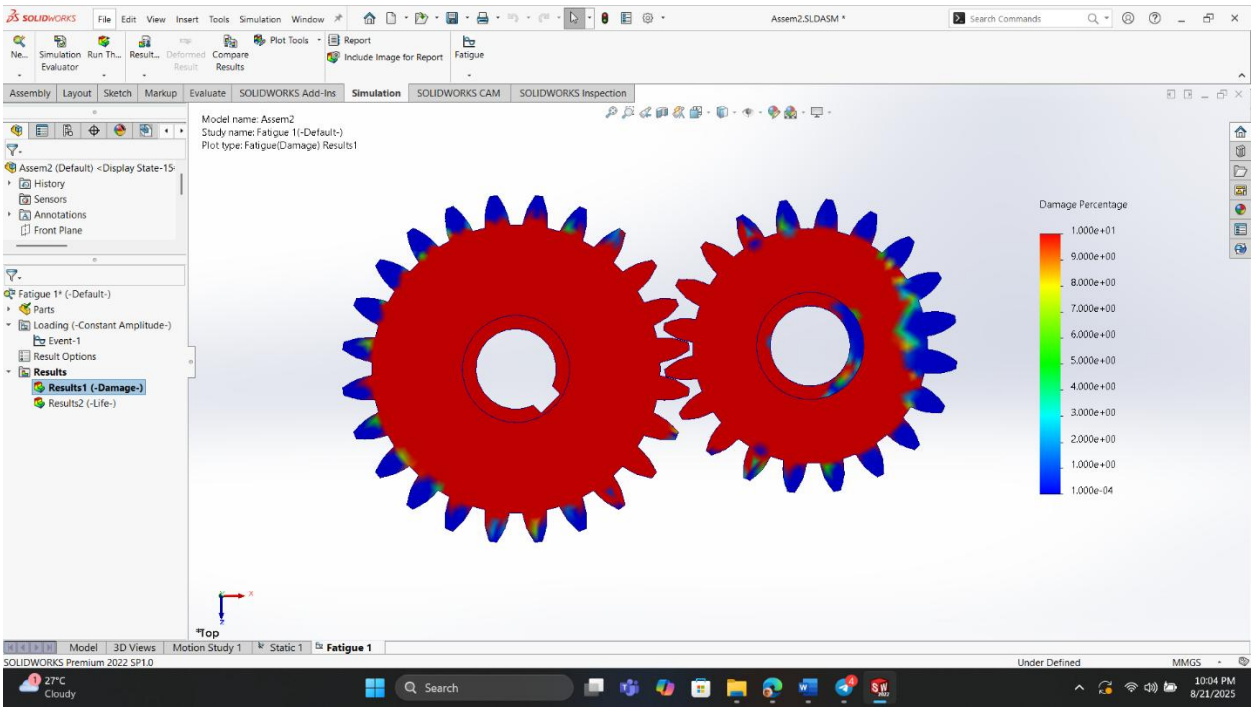

Fig 12: Damage percentage

Discussion:

The static stress analysis indicated a maximum stress of approximately **118,586 N/m²**, which was within the expected range for alloy steel under the given load conditions. This stress value served as the baseline for fatigue analysis.

In the fatigue study, the S-N curve was applied to simulate material behavior under cyclic loading. The selected scale factor (0.6) ensured that the applied load represented practical working conditions rather than extreme cases. The results showed how the gears would respond to repeated loading cycles and predicted the number of cycles to failure.

The analysis confirmed that under the given torque and speed, the gears would sustain significant fatigue life before failure. This highlights the reliability of alloy steel as a material for spur gears in high-load transmission systems. However, the fatigue life is influenced by several factors such as surface finish, residual stresses, lubrication, and misalignment, which were not included in this simplified model.

Conclusion:

The fatigue analysis conducted in SolidWorks demonstrated that spur gears made of alloy steel can withstand the applied loading conditions with considerable fatigue life. The study confirmed that incorporating S-N curves allows realistic estimation of durability in gear systems. This type of simulation is essential for designing reliable gears in engineering applications, minimizing unexpected failures, and ensuring system longevity.

References:

[1] V. M. Faires, Design of Machine Elements, 14th ed., Boston, MA, USA: Cengage Learning, 2021.

[2] "SolidWorks Simulation," SolidWorks, [Online]. Available: https://www.solidworks.com/product/solidworks-simulation. [Accessed: Oct. 18, 2025].

[3] S. Canfield, ME3610 Part III: Gear Systems: Analysis, Tennessee Technological University, 2017. [Online]. Available: https://sites.tntech.edu/scanfield/wp-content/uploads/sites/59/2017/01/ME3610_Part-III-Gears.pdf. [Accessed: Oct. 18, 2025].