Heaven's light is our guide

RAJSHAHI UNIVERSITY OF ENGINEERING & TECHNOLOGY
Department of Mechatronics Engineering

Assignment

Title: *Advanced Automated Bottling Plant with Integrated Quality Control, Parallel Processing & Fault Recovery.*

Submitted By
Homayra Mobesshira Hemu
ID: 2008005
4thYear Odd Semester
Department of Mechatronics Engineering
Rajshahi University of Engineering & Technology, Rajshahi-6204.

Submitted To:
Md. Faisal Rahman Badal
Assistant Professor
Department of Mechatronics Engineering
Rajshahi University of Engineering & Technology, Rajshahi-6204.
Safwat Mukarrama Choudhury
Lecturer
Department of Mechatronics Engineering
Rajshahi University of Engineering & Technology, Rajshahi-6204.

Date of Submission : 20 October, 2025

MTE 4102

Automation Sessional

Problem Statement:

Title: Advanced Automated Bottling Plant with Integrated Quality Control, Parallel Processing & Fault Recovery.

Objectives: This PLC-controlled plant should handle the entire cycle from bottle infeed to packaging, with multiple conveyors, parallel operations, automatic fault handling, and quality inspection.

Stage 1: Bottle Feeding & Detection

➢ Bottles arrive from storage conveyor. Entry gate opens only when the filling station is ready.

➢ Photoelectric sensor detects missing bottles. If gap detected, skip filling sequence for that position.

Stage 2: Washing Stage

➢ Bottles pass through automatic washer. Rotary spray arms activated only when bottle detected inside chamber.

➢ Timer ensures proper wash duration. Drain pump removes used water.

Stage 3: Filling Stage

➢ When the bottles reach to the filling station, a filling pump will active for filling the bottles.

➢ The station uses level sensors for precise filling.

Stage 4: Capping Stage

➢ Automatic capping head places caps.

➢ Cap presence sensor ensures cap is applied; if missing, bottle marked for rejection.

Stage 5: Labeling Stage

➢ Label applicator triggered only if bottle passes both fill & cap quality checks.

Stage 6: Packaging & Palletizing

➢ Bottles grouped in sets of 12.

➢ Two robotic arms (Consider two motor) operate in parallel- one loads bottles into boxes, the other palletizes boxes.

Stage 7: Fault Detection & Recovery

➢ If any station stops (jam, low pressure, empty cap feeder, low label roll), PLC pauses upstream processes while allowing downstream processes to finish.

Tasks:

1. Draw I/O mapping table.
2. Create process flowchart for entire system.
3. Write step-by-step sequential logic for each stage.
4. Implement ladder diagram in PLC simulation software.
5. Demonstrate system in simulation with:
    a. ➢ Normal operation.
    b. ➢ Missing bottle scenario.
    c. ➢ Overflow scenario.
    d. ➢ Fault scenario (jam, low pressure, cap feeder empty).
6. Address the societal and environmental impact of automation.

Input Table:

Input Name	Description
Start	Activates or switches on the entire system.
Filling Station Ready	Confirms that the filling station is ready for operation.
Gap Detected	A sensor detects whether there is a gap (presence or absence of a bottle).
Bottle Detected	A sensor detects that a bottle has entered the automatic washer.
Drain Jam	Indicates that the drain is blocked or jammed.
Reached Filling Station	Confirms that bottles have reached the filling station.
Level Sensor	Detects overfilling or ensures precise liquid level in the bottle.
Precise Filling Detected	A sensor confirms that bottles are filled to the correct level.
Cap Absent	Checks whether the bottle has a cap or not.
Not Enough Cap in Machine	Indicates that the machine has insufficient caps for capping.
Label Applicated	Confirms that the labeling process has been completed successfully.
Box Counting	Counts how many bottles have been packed into boxes.

Output Table:

Output Name	Description
Entry Gate Open	Opens the entry gate to allow bottles onto the conveyor.
Filling	Feeds bottles onto the conveyor for the washing process.
Skip	Skips the feeding sequence for a position where no bottle is detected (gap detected).
Rotary Spray Arm	Activates the rotary spray arm to wash bottles.
Drain Pump	Drains the used water after washing the bottles.
Jam Detected	Sends a signal to stop the upstream system in case of a jam.
Filling Pump	Starts the pump to fill bottles with the liquid.
No Precise Filling / Overfilling	Sends a signal to stop the system if overfilling or inaccurate filling is detected.
Automatic Capping	Activates the capping mechanism to place caps on bottles.
Mark Rejection	Marks a bottle as rejected due to a detected fault.
Cap Needed	Sends a signal indicating that there are not enough caps in the machine.
Label Applied	Confirms that labeling is completed and the bottle is defect-free for use.
Start Next	Sends a signal to reset the counter to start counting the next batch of 12 bottles.
Palletizes Boxes	Activates the robotic arm to package 12 bottles into a single box.
Load Bottle Arm	

Flow chart :

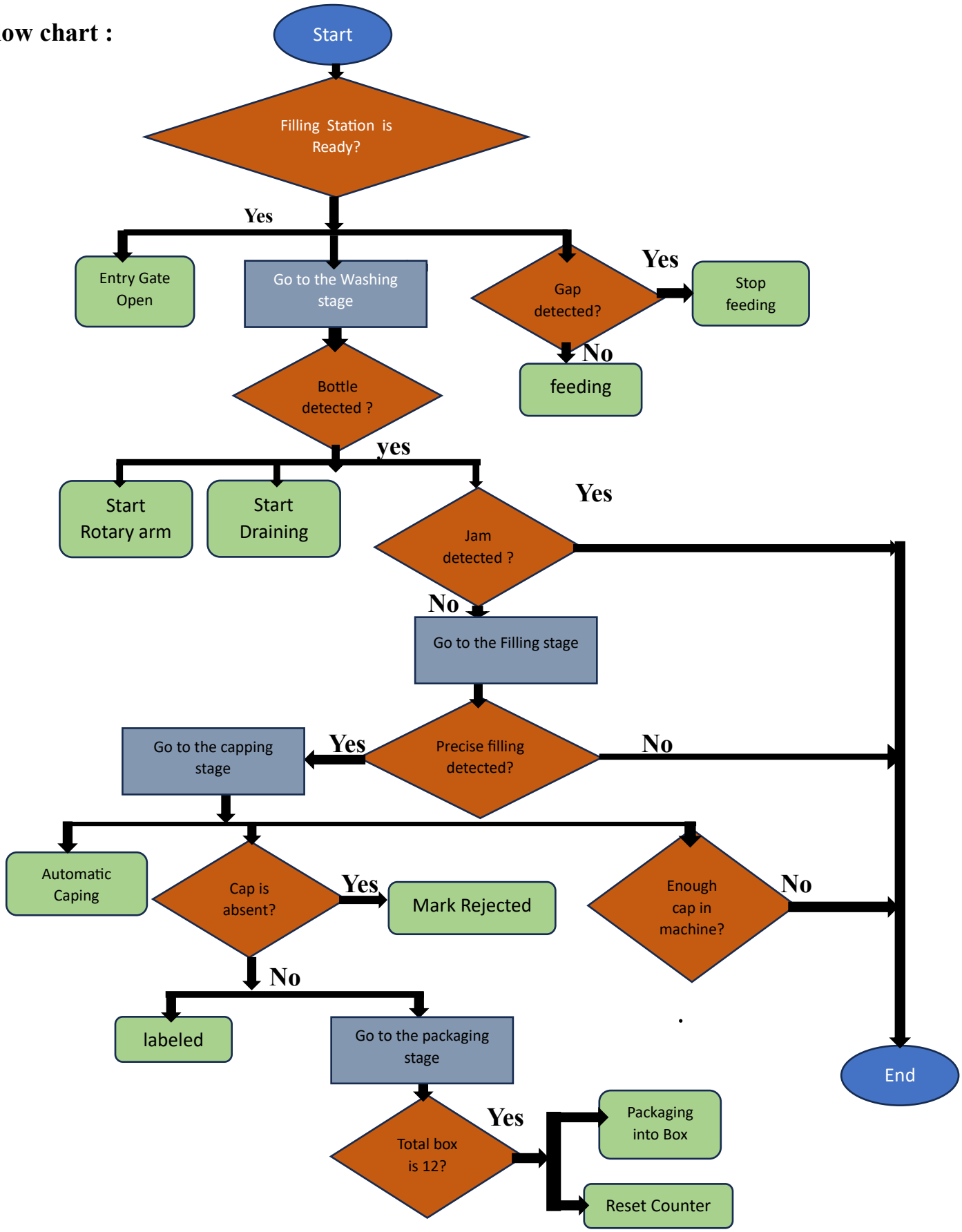
Start
Filling Station is Ready?
Yes
Entry Gate Open
Go to the Washing stage
Gap detected?
Yes
Stop feeding
No
feeding
Bottle detected ?
yes
Start Rotary arm
Start Draining
Jam detected ?
Yes
No
Go to the Filling stage
Precise filling detected?
Yes
No
Go to the capping stage
Automatic Caping
Cap is absent?
Yes
Mark Rejected
Enough cap in machine?
No
No
labeled
Go to the packaging stage
Total box is 12?
Yes
Packaging into Box
Reset Counter
End

Sequential Logic:

```
Start = True
Stage 1: Bottle Feeding & Detection
If (Filling Station Ready = True ,
        Entry gate open =True
        If(gap is detected = True )
                Stop feeding = True
        Else
                Stop feeding = False
Stage 2: Washing Stage
If (Bottle is detected = True )
        Spray rotary arm = True
        Draining = True
        If(jam is detected = True)
                End
        else
                go to filling stage
Stage 3: Filling Stage
If(precise filling detected = True)
        Go to the capping stage
else
        End
Stage 4: Capping Stage
Automatic capping = True
If(cap is absent= True)
        Mark rejected = True
Else
Labeled
If enough cap in machine = false
        end
Stage 5: Packaging & Palletizing

If (total bottle counting is  12 = True)

        Packaging = True

        Reset Counter = True
```

Ladder Diagram:

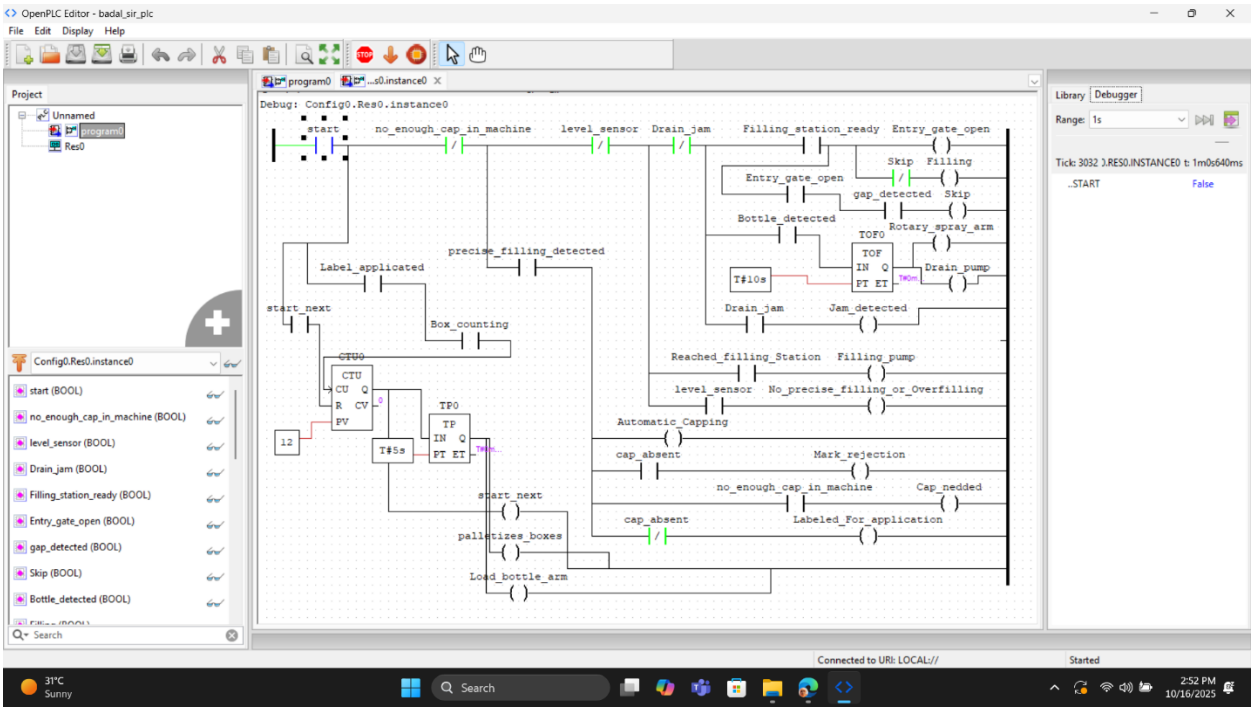

Normal Operation :

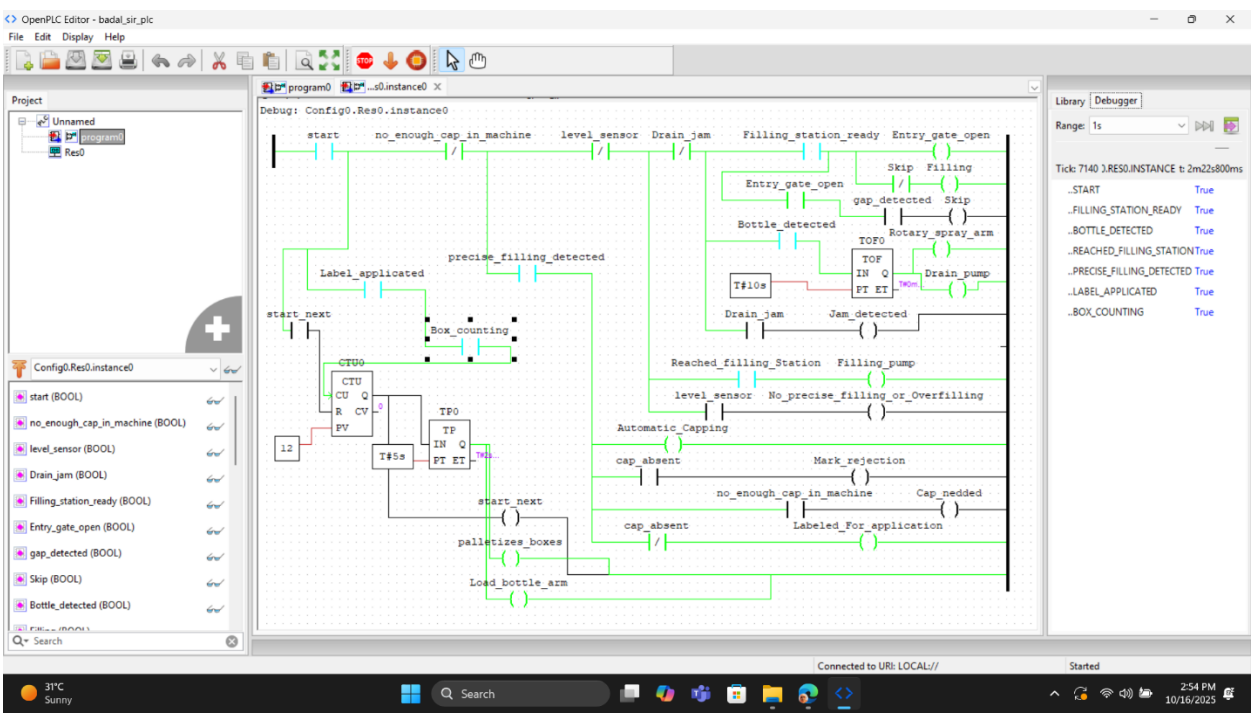

Missing Bottle Scenario:

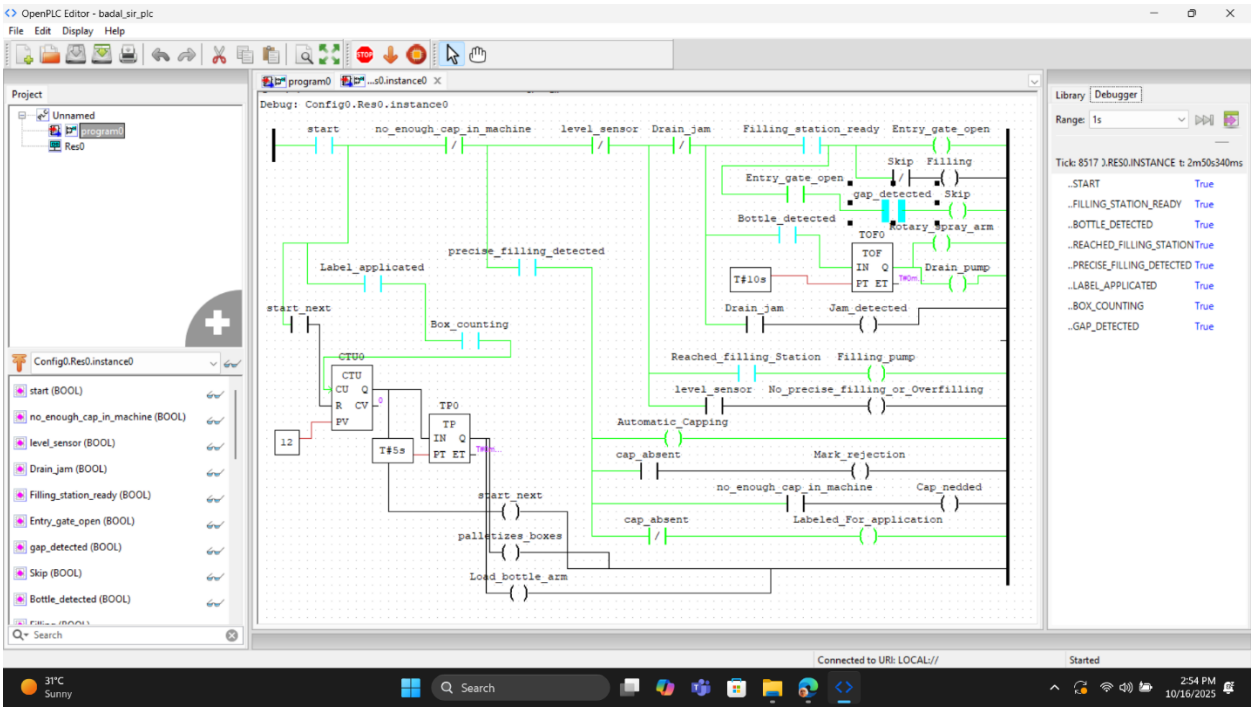

Jam Detection Scenario:

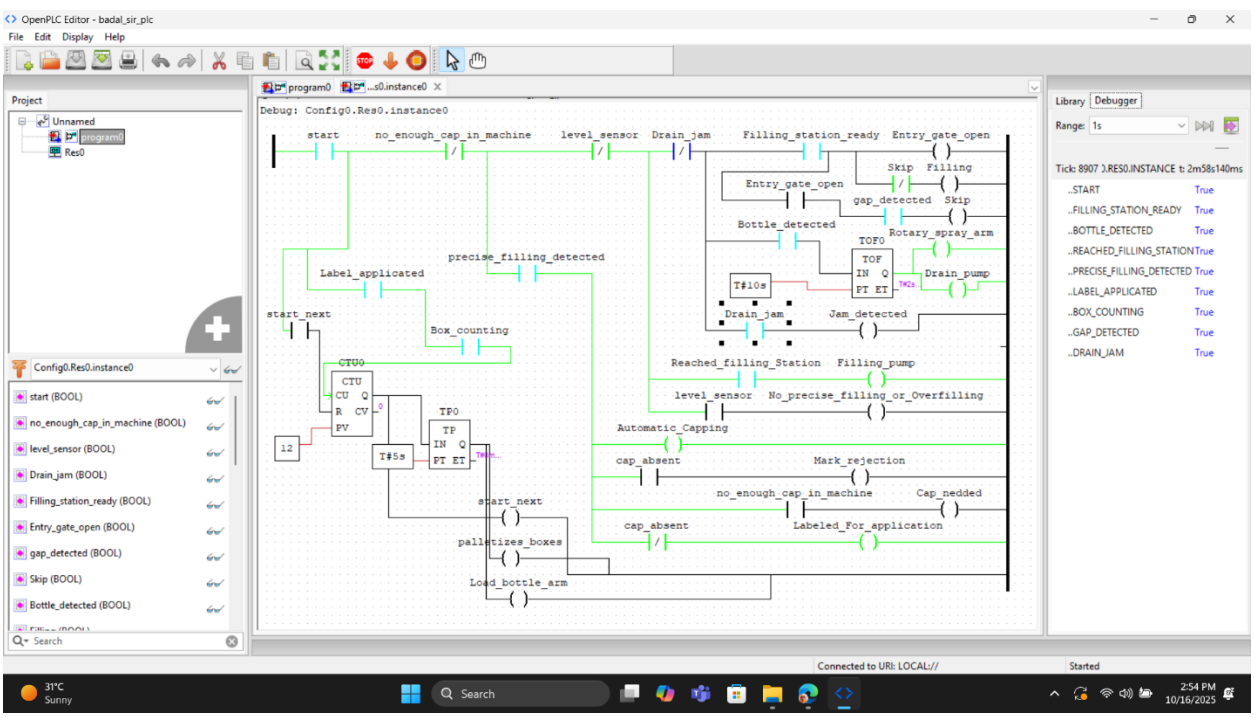

Overflow Scenario:

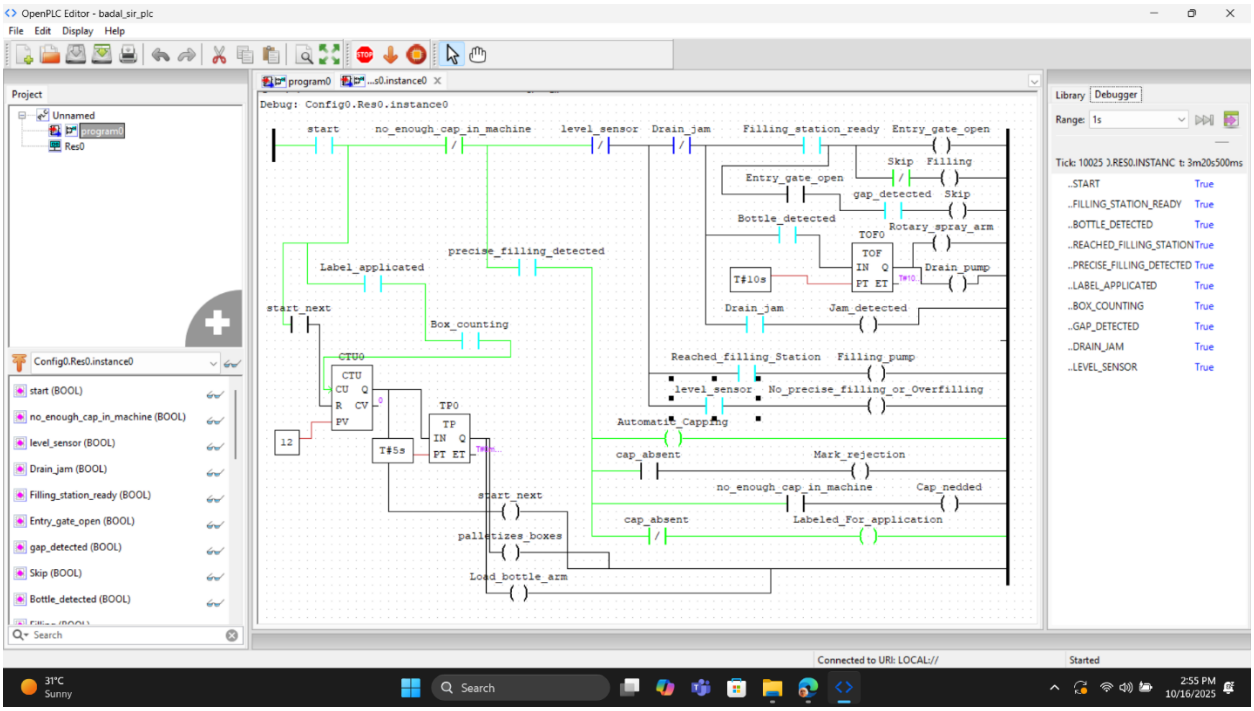

Cap Feeder Empty Scenario:

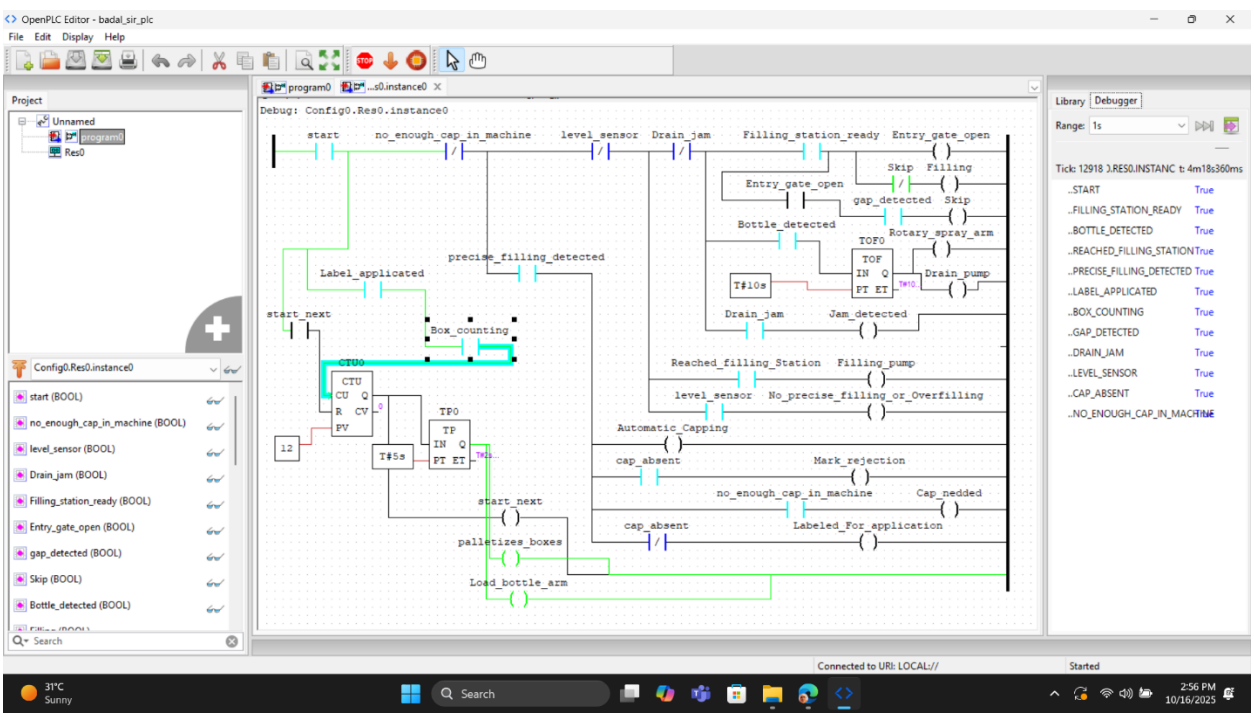

The societal and environmental impact of automation:

Automation has greatly revolutionized the modern society through increased productivity, accuracy, and safety in the industries. It reduces mistakes and allows people to focus on more creative and complicated work. However, it also leads to job loss, especially for low-skilled workers, which increases social inequality and economic stress.

From the environmental perspective, automation is advantageous and disadvantageous. On one hand, smart machines and systems can reduce the use of energy, save resources, and utilize resources with an efficient use, with the support of sustainability. On the other hand, production, operation, and disposal of automated machines create electronic waste and carbon.

Therefore, even as automation brought about progress and convenience, society must ensure ethical application, fair transition of jobs, and eco-friendly technology evolution to create a just and sustainable future.

Conclusion:

The successful design and simulation of the Advanced Automated Bottling Plant with Integrated Quality Control and Fault Recovery prove that automation can revolutionize the manufacturing sector. The PLC-based system efficiently manages complex operations through logical sequencing, sensor feedback, and time-controlled mechanisms. The implementation of fault recovery and parallel robotic processing demonstrates the potential of Industry 4.0 technologies to create intelligent, flexible, and self-correcting systems.

This experiment not only highlights the technical aspects of PLC control but also the broader implications of automation in developing nations like Bangladesh. By adopting such technologies, industries can significantly enhance production capacity, reduce human error, and improve product uniformity. However, to ensure sustainability, the country must invest in skill development, local technology innovation, and environmentally friendly automation solutions.

In summary, the project showcases how intelligent automation can bridge the gap between human efficiency and machine precision paving the way for a smarter, safer, and more productive industrial future for Bangladesh.