Heaven's light is our guide

RAJSHAHI UNIVERSITY OF ENGINEERING & TECHNOLOGY
Department of Mechatronics Engineering

Assignment

Submitted By:
Homayra Mobesshira Hemu
ID: 2008005
4thYear Even Semester
Department of Mechatronics Engineering
Rajshahi University of Engineering & Technology, Rajshahi-6204.

Submitted To:
Md. Robiul Islam
Assistant Professor
Department of Mechatronics Engineering
Rajshahi University of Engineering & Technology, Rajshahi-6204.
Dip Kumar Saha
Assistant Professor
Department of Mechatronics Engineering
Rajshahi University of Engineering & Technology, Rajshahi-6204.

Date of Submission 3 May, 2026

MTE 4207

Robotics

Problem Statement : A chocolate manufacturing company came up with a new gift product idea: A picture drawn by the customer will be converted into a chocolate box by arranging chocolates of different colors on a tray. The chocolates are of ellipsoid shape with the major axis diameter being 10mm and the minor axis diameter being 6mm. The tray contains 10 by 10 array of concave dimples into which the chocolates can be placed as shown in Figure 1.

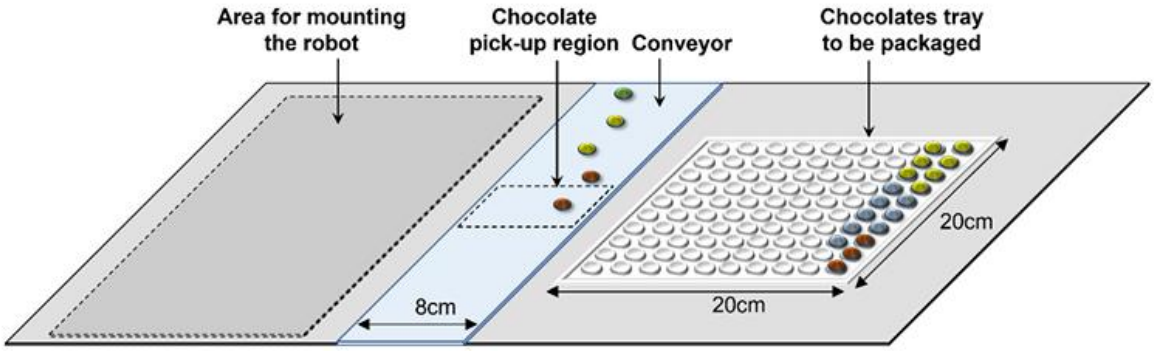

Figure 1. An illustration of the environment and application scenario.

You are tasked to design a robotic solution based on a 5-bar planar parallel robot and an end effector to use chocolates and construct the picture board on the chocolate tray. The robot design should meet the following requirements. The robot should be mounted on a horizontal platform, and it should be able to house and manoeuvre the end-effector (for ex., a gripper). You are free to design the environment and can choose any cameras or sensors you desire. The robot should be able to locate and pick up the chocolate from the pick-up area on the conveyor and place it in the rows and columns in the box. The size of the tray is 20cm x 20cm and can hold 100 chocolates. Assume any information that is not available in the project specification. To solve the challenge posed, you are required to develop a robotic solution including the following:

1. Kinematic design
2. 3D CAD model
3. End-effector assembly and
4. Forward and inverse kinematic models

Introduction: Robotics plays an important role in modern automation and industrial applications. Robotic manipulators are widely used to perform tasks that require precision and efficiency, such as pick-and-place operations. To understand how a robot moves and performs tasks, it is necessary to study its kinematics. In this assignment, the kinematic design and the forward and inverse kinematic models of the robot are analyzed to understand the relationship between joint motion and the position of the end-effector.

Proposed Solution:

1. **Customer input processing:** The customer submits a drawing of any shape. The control computer scans it and maps each of the 100 grid positions to a required color. This creates the color map table stored in memory.
   Example: The customer provided a picture that contains 40 red, 30 green, and 30 blue items.
2. **Tray detection:** When a new empty tray arrives on the platform, the overhead camera USB webcam photographs the tray. The software confirms the tray is correctly positioned and loads the color map for that tray.
3. **Conveyor and chocolate detection:** The conveyor belt starts. As chocolates move along the belt, two sensors at a fixed detection station work together: the TCS34725 RGB color sensor identifies the chocolate color (Red / Green / Blue) by reading the reflected R, G, B light values. The HC-SR04 ultrasonic sonar sensor, placed just before the (0,0) origin position, measures the distance to the arriving chocolate, confirming its position on the belt.
4. **Decision logic:** The control computer checks, does the detected color still have unfilled positions in the tray? If yes, the conveyor stops. If there is a extra or unwanted color, the conveyor keeps running and the chocolate is skipped and discarded off the belt end.
5. **Pick and place:** With the conveyor stopped and chocolate at the pickup position, the 5-bar planar parallel robot activates. Using inverse kinematics, it calculates the joint angles needed to move the gripper to the pickup point, closes the gripper around the ellipsoid chocolate (major axis 10mm, minor axis 6mm), moves to the target dimple position (row, col) in the tray, and places it precisely.
6. **Iterations:** The conveyor restarts. The loop continues until all 100 positions are filled. When a second tray arrives, the overhead camera scans it again and the whole cycle repeats automatically.

Kinematic Design:

Let's design a 5-bar closed-loop manipulator. L1 is the base, and L2 and L3 are connected to the base. L4 and L5 are connected sequentially to L2 and L3, and the end effector is placed at the intersection of L4 and L5.

Base Placement:
Base joints: A(-12,-5) to (-12,5)
Base Distance : L1 = 10 cm

Link Lengths:

L2	22 cm
L3	22 cm
L4	20 cm
L5	20 cm

Schematic Diagram:

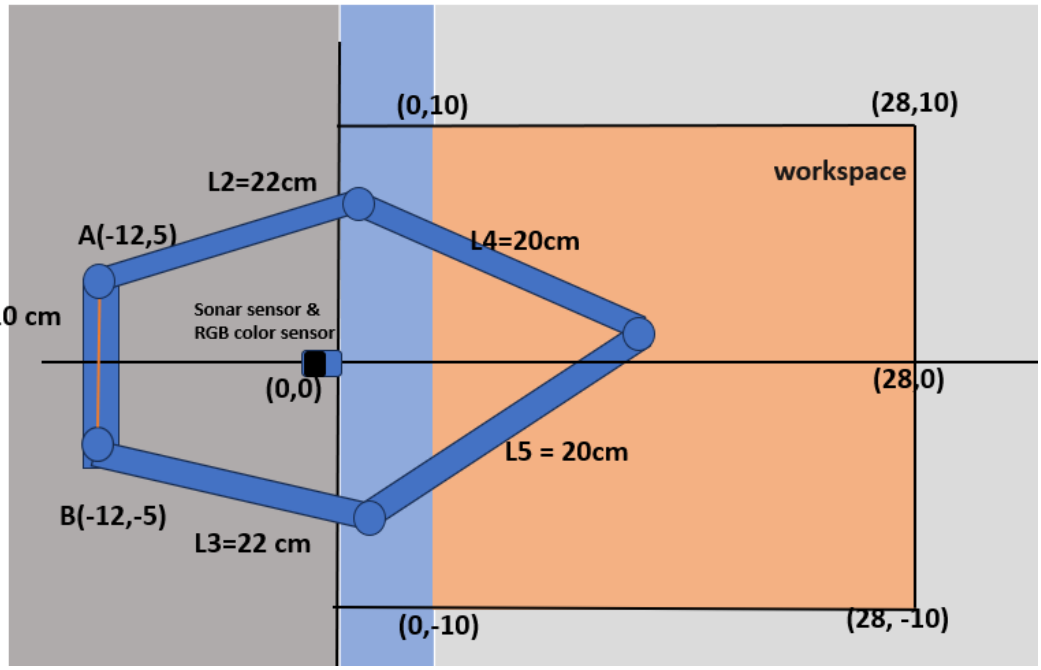

3D CAD model

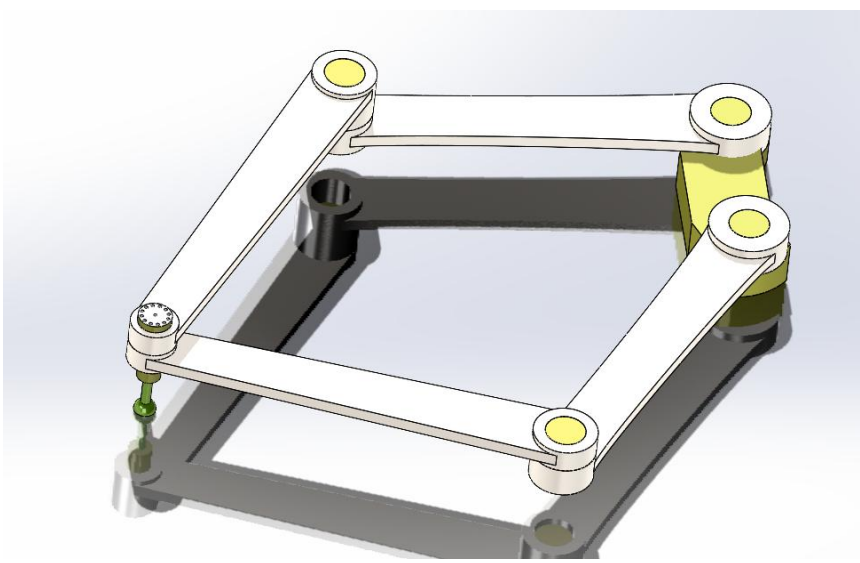

Fig 01: SolidWorks Cad design

End-effector assembly

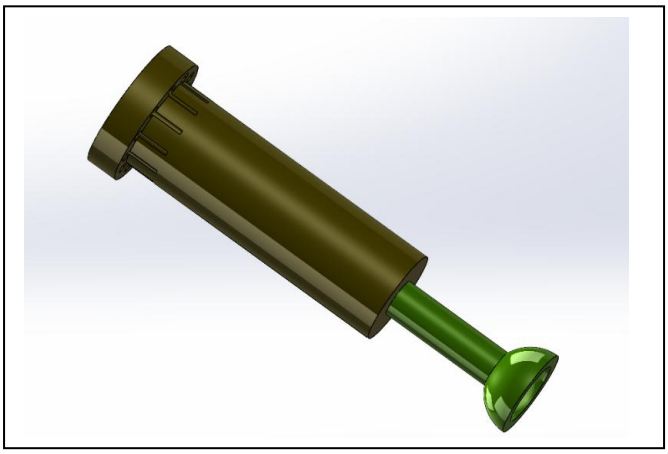

Fig 02: Vacuum Gripper

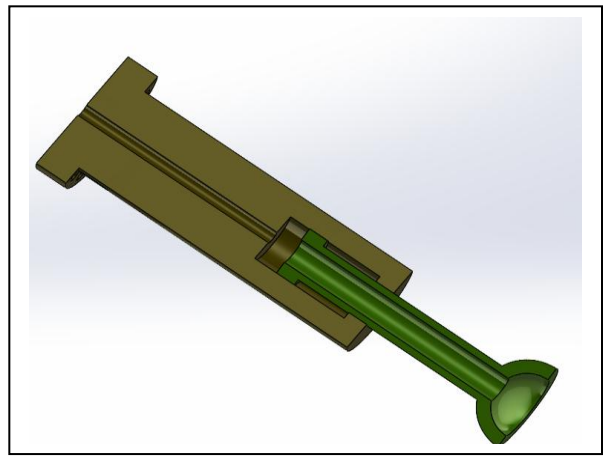

Fig 03: Inside view of the gripper assembly

The gripper head is made of rubber or another flexible material so that it can pick up objects like chocolate smoothly. It can be controlled pneumatically; when it grips a chocolate, a prismatic joint in the end-effector assembly shortens the length of the end effector. This helps avoid friction with the tray or conveyor, allowing the 5-bar manipulator to move its arm safely. After reaching the accurate position, the end effector extends to place the chocolate and then shortens again to avoid friction.

Forward and inverse kinematic models:

System Definition

- Base width (d): 10 cm distance between the two fixed joints O_1 and O_2
- Links L_2, L_3: 22 cm driven links from O_1 and O_2 respectively
- Links L_4, L_5: 20 cm connect from end of L_2 and L_3 to the end-effector E

Joint angles: θ_1 (at O_1, driving L_2) and θ_2 (at O_2, driving L_3) are the two actuated inputs.

Forward Kinematics

Given (θ_1, θ_2) find end-effector position (xE, yE).

1.Base joint positions:

$$O_1 = (0,\ 0), O_2 = (d,\ 0) = (10,\ 0)$$

2.Knee joint positions (end of L_2 and L_3):

$$A = O_1 + L_2(\cos\ \theta_1,\ \sin\ \theta_1) = (22\cos\ \theta_1,\ 22\sin\ \theta_1)$$
$$B = O_2 + L_3(\cos\ \theta_2,\ \sin\ \theta_2) = (10 + 22\cos\ \theta_2,\ 22\sin\ \theta_2)$$

3.End-effector as circle intersection:

E lies on a circle of radius L_4 centered at A and on a circle of radius L_5 centered at B:

$$|EA|^2 = L_4^2 \implies (x_E - A_x)^2 + (y_E - A_y)^2 = L_4^2$$
$$|EB|^2 = L_5^2 \implies (x_E - B_x)^2 + (y_E - B_y)^2 = L_5^2$$

Subtract the two equations to get the radical axis (linear in x, y):

$$2(B_x - A_x)\, x_E + 2(B_y - A_y)\, y_E = L_4^2 - L_5^2 + B_x^2 - A_x^2 + B_y^2 - A_y^2$$

Since $L_4 = L_5$ this simplifies to:

$$2(B_x - A_x)\, x_E + 2(B_y - A_y)\, y_E = B_x^2 - A_x^2 + B_y^2 - A_y^2$$

4. Solve the system:

Let: D = |AB| (distance between knees)

$$D = \sqrt{(B_x - A_x)^2 + (B_y - A_y)^2}$$

Define midpoint M and unit vectors:

$$M = \frac{A + B}{2}, \hat{u} = \frac{B - A}{D}, \hat{v} = (-\hat{u}_y,\ \hat{u}_x)$$

The projection along the line AB:

$$h = \sqrt{L_4^2 - \left(\frac{D}{2}\right)^2}$$

(Must satisfy $D \leq 2L_4$ for a solution to exist)

Two solutions (elbow-up / elbow-down):

$$E = M \pm h\, v$$

Selecting the upper solution (positive branch, workspace above the base):

$$x_E = M_x - h\, \hat{u}_y, y_E = M_y + h\, \hat{u}_x$$

Inverse Kinematics

Given target (xE, yE) -find (θ_1, θ_2).

1.From O_1 to E, find θ_1:

Joint A lies on a circle of radius L_2 centered at O_1 and a circle of radius L_4 centered at E.

$$D_1 = \sqrt{x_E^2 + y_E^2}$$

Projection along O_1E:

$$p_1 = \frac{D_1^2 + L_2^2 - L_4^2}{2\,D_1}$$

Perpendicular offset:

$$q_1 = \sqrt{L_2^2 - p_1^2}$$

Unit vector from O_1 to E:

$$\hat{u}_1 = \left(\frac{x_E}{D_1},\ \frac{y_E}{D_1}\right), \hat{v}_1 = \left(\frac{-y_E}{D_1},\ \frac{x_E}{D_1}\right)$$
$$A = p_1\,\hat{u}_1 \pm q_1\,\hat{v}_1$$
$$\theta_1 = \text{atan2}(A_y,\ A_x)$$

2. From O_2 to E, find θ_2:

$$D_2 = \sqrt{(x_E - 10)^2 + y_E^2}$$
$$p_2 = \frac{D_2^2 + L_3^2 - L_5^2}{2\,D_2}$$
$$q_2 = \sqrt{L_3^2 - p_2^2}$$
$$\hat{u}_2 = \left(\frac{x_E - 10}{D_2},\ \frac{y_E}{D_2}\right)$$
$$B = O_2 + p_2\,\hat{u}_2 \mp q_2\,\hat{v}_2$$
$$\theta_2 = \text{atan2}(B_y - 0,\ B_x - 10)$$

Workspace analysis:

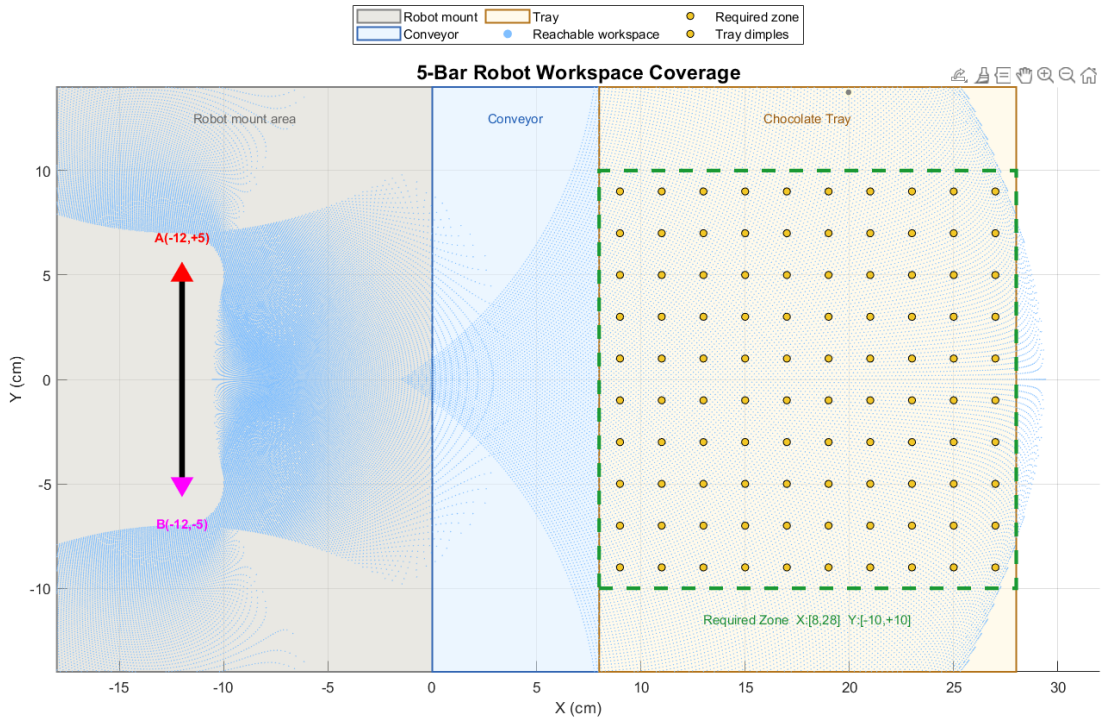

Fig 04: MATLAB Visualization

There is a workspace analysis using MATLAB code. Here, the blue dots show the reachable points of the robot. It indicates that the robot can fully reach the entire chocolate tray. In addition, it can also reach along the x-axis, from where it picks the chocolates from the conveyor. This figure is a visualization generated from the MATLAB code.

Conclusion: A complete proposed solution has been developed, including the design of the gripper assembly and the full CAD model. The system's feasibility is supported by workspace visualization, which confirms that the robot can effectively reach and operate within the required area.