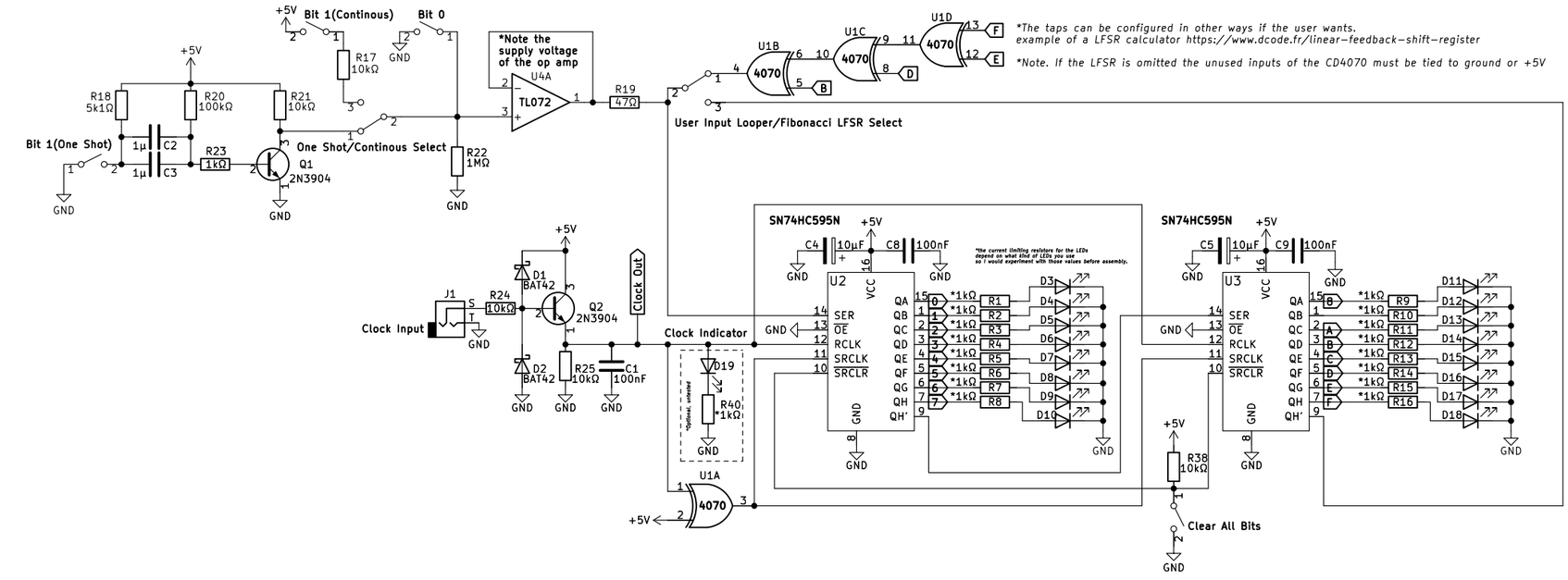

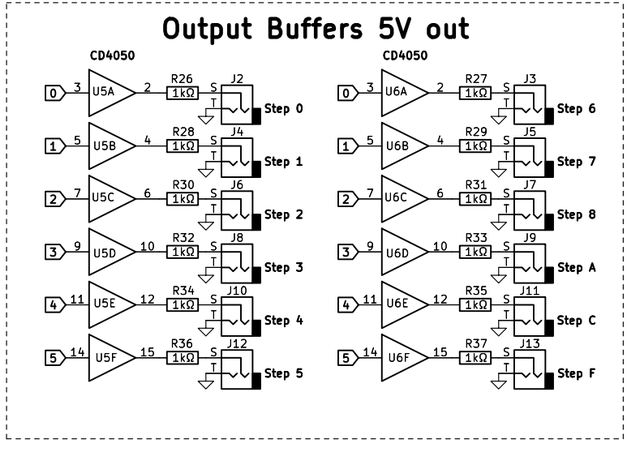

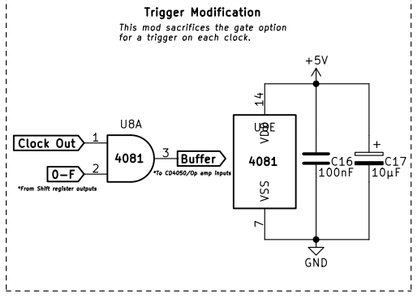

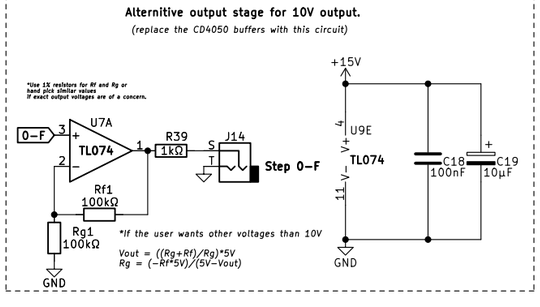

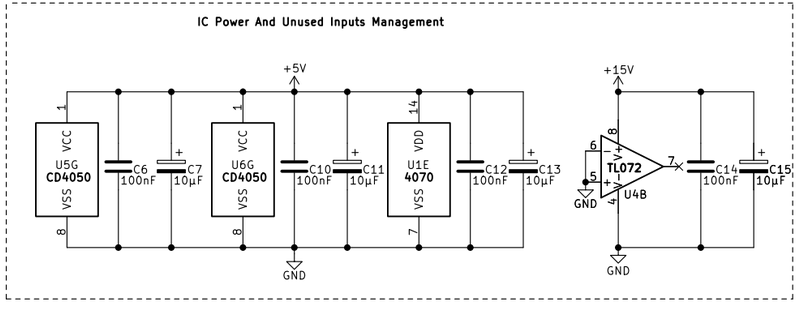

*Note. I use the 5 Volt rail of my power supply. If you don't have a dedicated 5 volt rail, find a 5 Volt regulator(78L05 should be fine but I would use something beefier like Lm7805 to be safe) and use the examples found in the datasheet to set up your own 5 volt rail.

16 Step Shift Register Sequencer by A.S.G

A.S.G		
Sheet: /		
File: Shift Register Sequencer.kicad_sch		
Title: 16 Step Shift Register Sequencer		
Size: User	Date: 2023-05-18	Rev:
KiCad E.D.A. kicad (6.0.7)		Id: 1/1