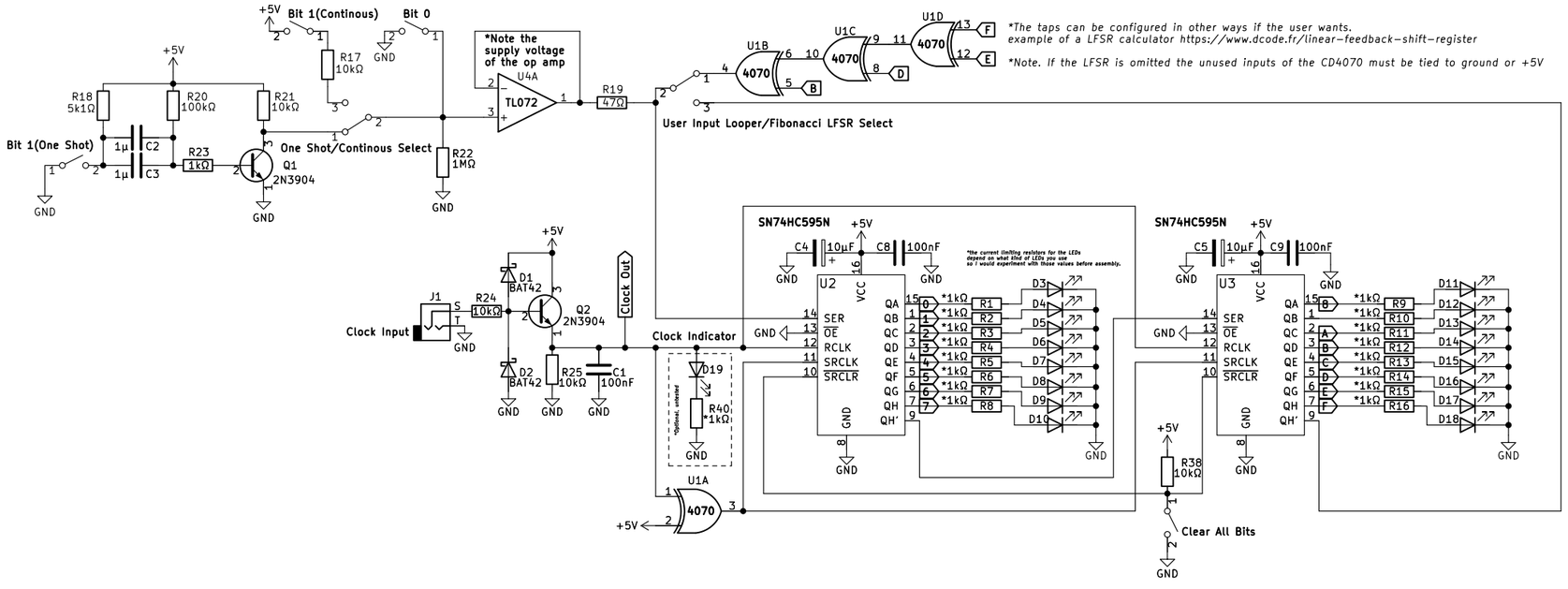

*The taps can be configured in other ways if the user wants.
example of a LFSR calculator https://www.dcode.fr/linear-feedback-shift-register

*Note. If the LFSR is omitted the unused inputs of the CD4070 must be tied to ground or +5V

Output Buffers 5V out

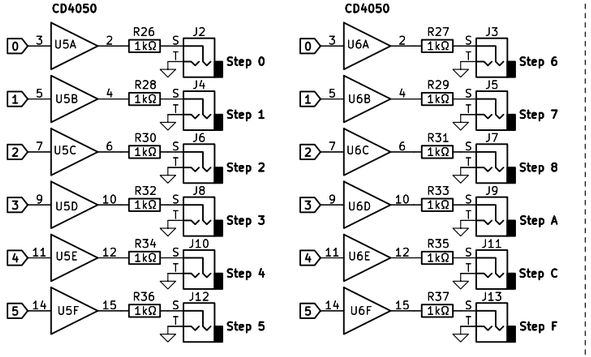

Trigger Modification

This mod sacrifices the gate option for a trigger on each clock.

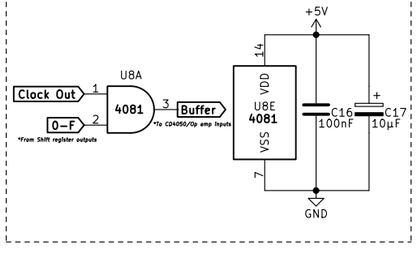

Alternitive output stage for 10V output.

(replace the CD4050 buffers with this circuit)

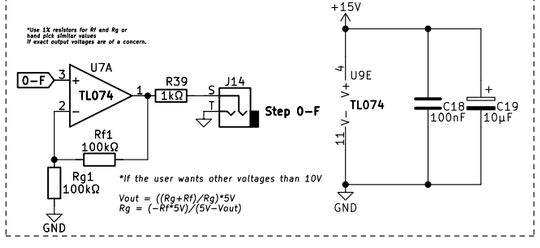

IC Power And Unused Inputs Management

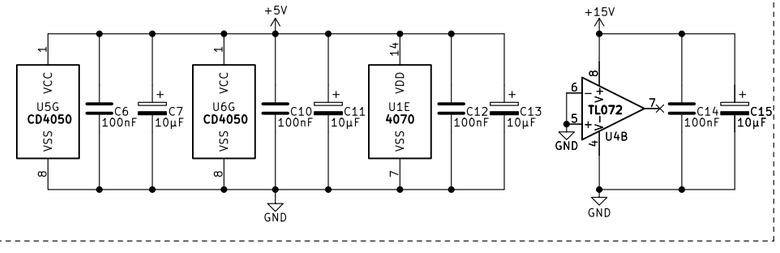

*Note. I use the 5 Volt rail of my power supply. If you don't have a dedicated 5 volt rail, find a 5 Volt regulator(78L05 should be fine but I would use something beefier like Lm7805 to be safe) and use the examples found in the datasheet to set up your own 5 volt rail.

16 Step Shift Register Sequencer by A.S.G

A.S.G		
Sheet: /		
File: Shift Register Sequencer.kicad_sch		
Title: 16 Step Shift Register Sequencer		
Size: User	Date: 2023-05-18	Rev:
KiCad E.D.A. kicad (6.0.7)		Id: 1/1