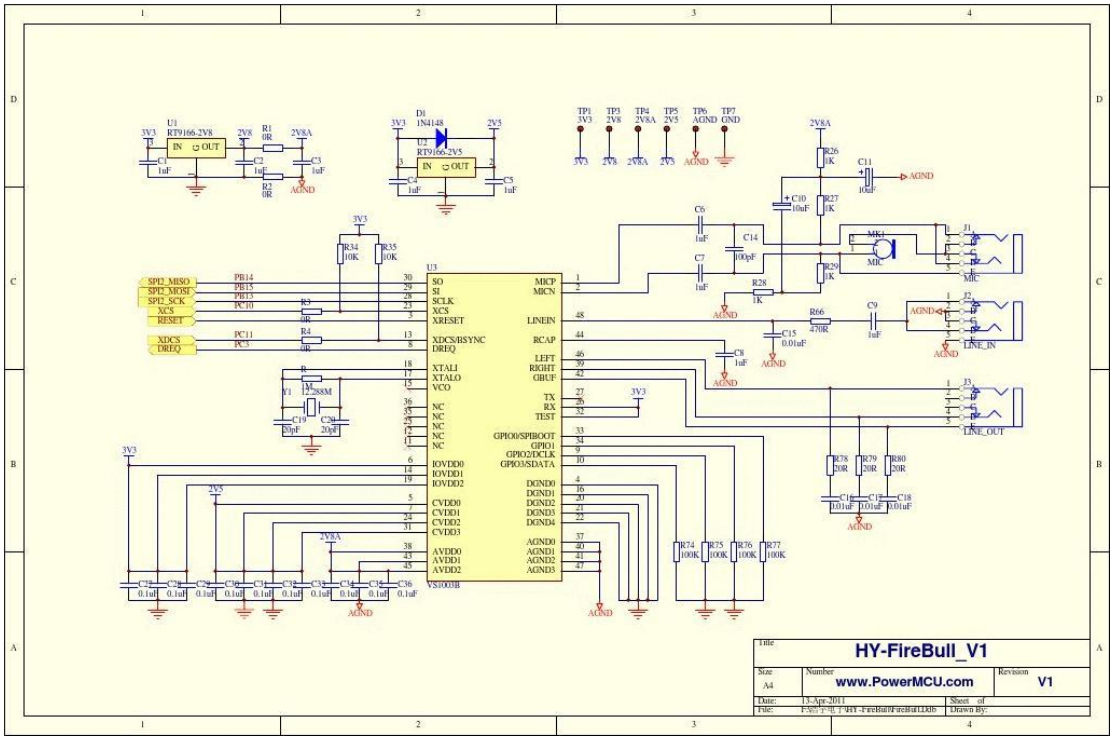
HY-FireBull_V1
www.PowerMCU.com
V1
Size
A4
Number
Revision
Date: 13-Apr-2011
Sheet of
Drawn By:
U1 RT9166-2V8
U2 RT9166-2V5
D1 1N4148
U3 VS1003B
MIC
LINE_IN
LINE_OUT
SPI2_MISO
SPI2_MOSI
SPI2_SCK
XCS
RESET
XDCS
DREQ
3V3
2V8
2V8A
2V5
AGND

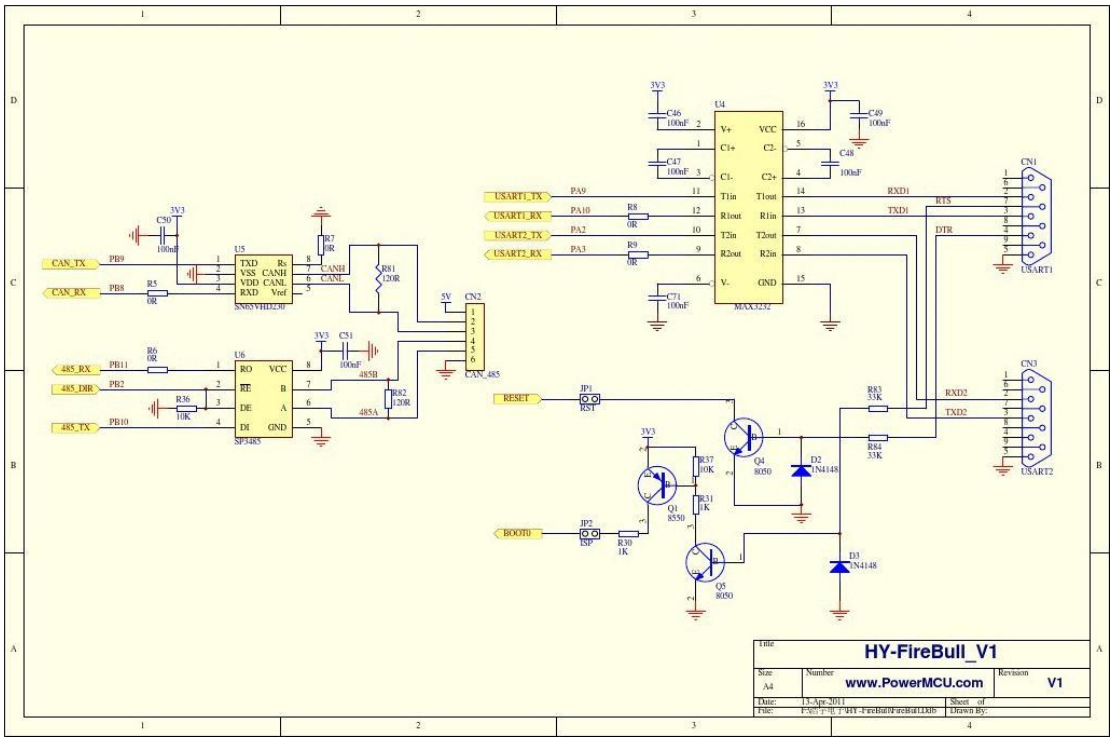
HY-FireBull_V1
www.PowerMCU.com
V1
Size
A4
Number
Revision
Date: 13-Apr-2011
Sheet of
Drawn By:
U4 MAX3232
U5 SN65VHD230
U6 SP3485
CN1 USART1
CN2 CAN_485
CN3 USART2
CAN_TX
CAN_RX
485_RX
485_DIR
485_TX
USART1_TX
USART1_RX
USART2_TX
USART2_RX
RESET
BOOT0
3V3
5V

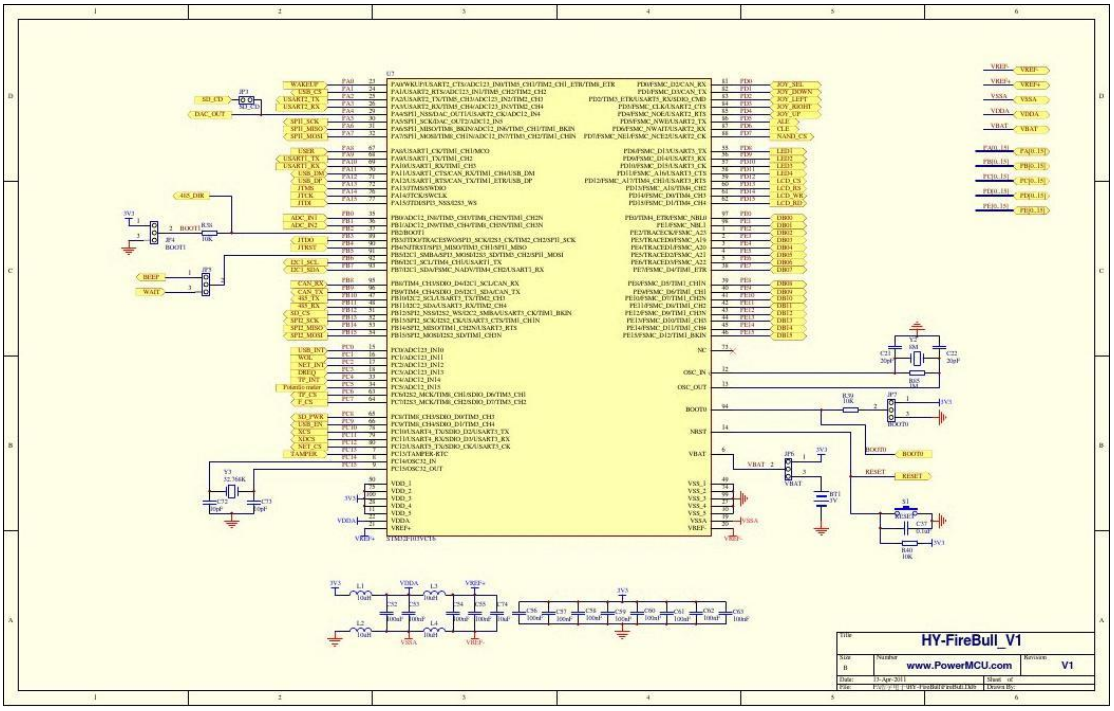
HY-FireBull_V1
www.PowerMCU.com
V1
Date: 13-Apr-2011
File: F:\安卡电子\HY-FireBull\FireBull.DDB

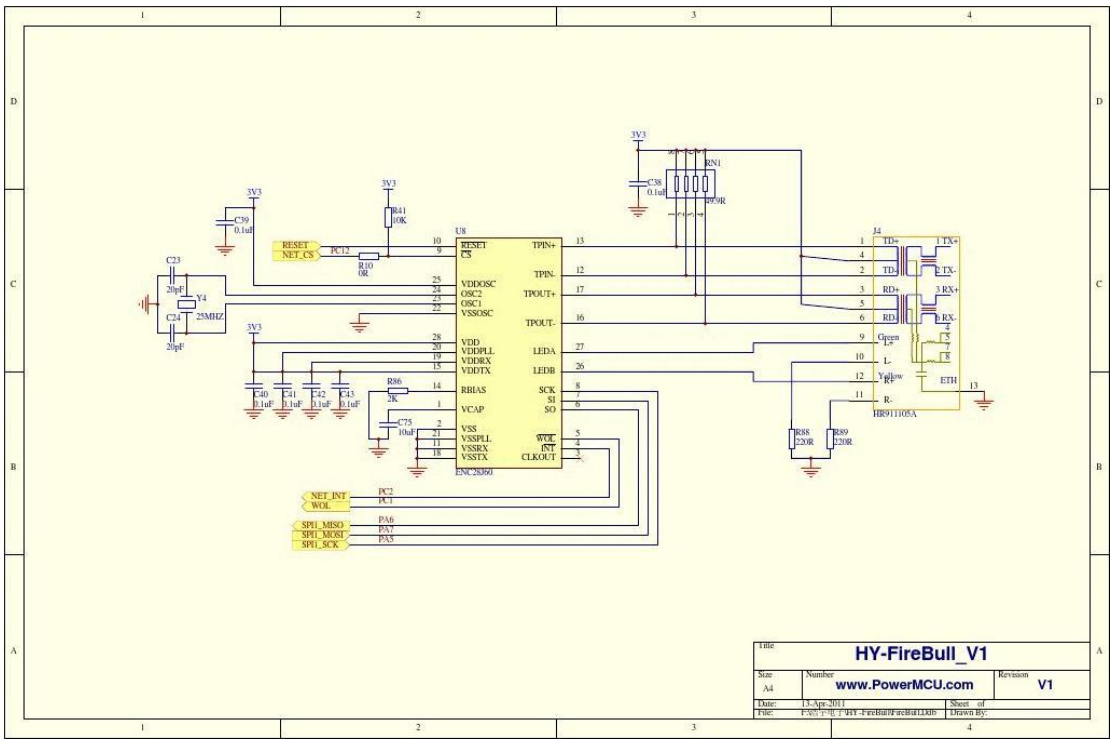
HY-FireBull_V1
Size A4
www.PowerMCU.com
V1
Date: 13-Apr-2011
File: F:\安卡电子\HY-FireBull\FireBull.DDB
U8
ENC28J60
J4
HR911105A
ETH
Y4
25MHZ
RN1
RESET
NET_CS
NET_INT
WOL
SPI1_MISO
SPI1_MOSI
SPI1_SCK

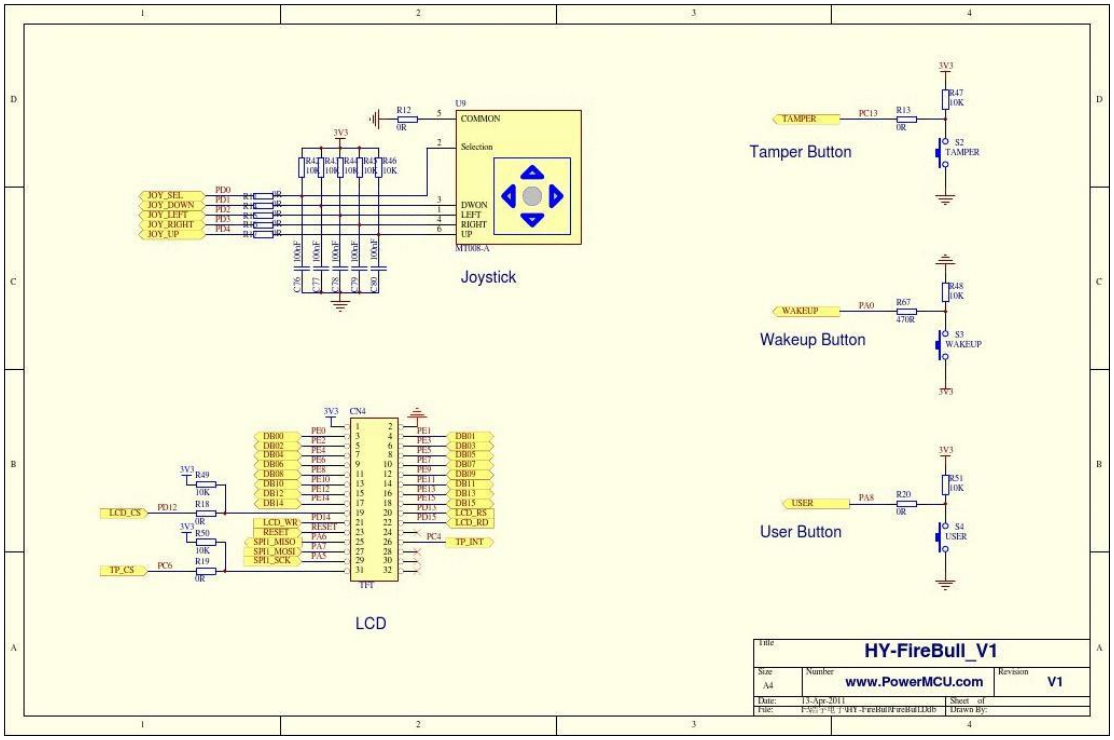
Joystick
Tamper Button
Wakeup Button
User Button
LCD
HY-FireBull_V1
www.PowerMCU.com
V1

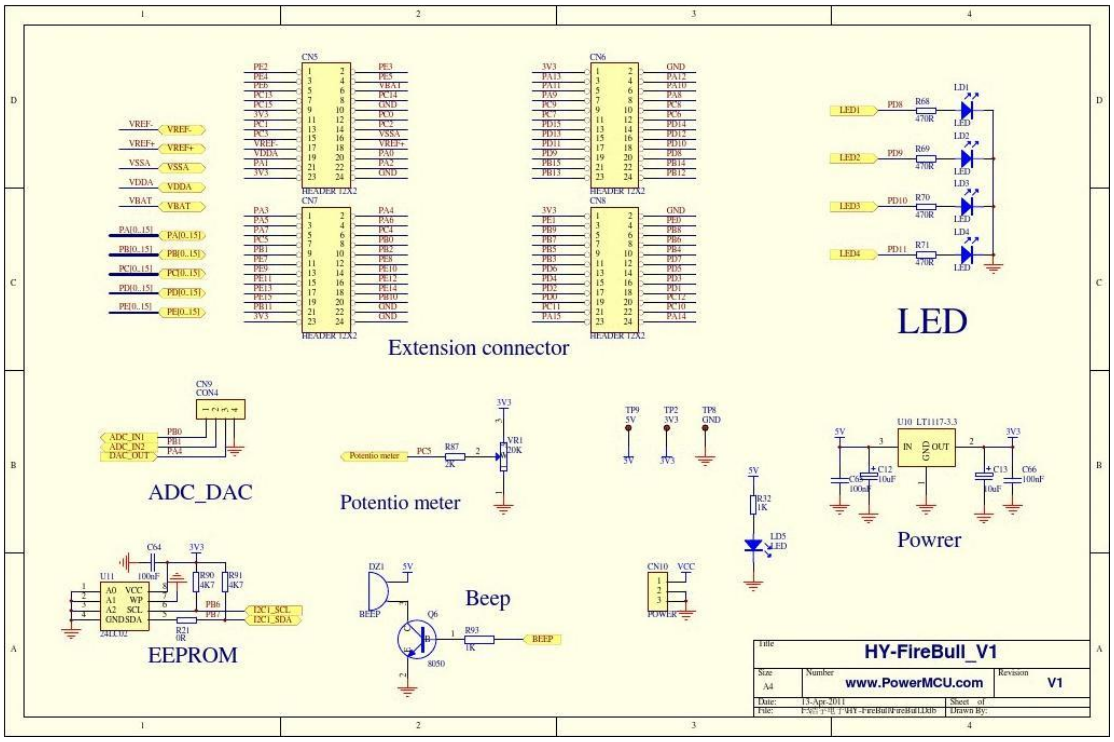
Extension connector
LED
ADC_DAC
Potentio meter
Powrer
EEPROM
Beep
HY-FireBull_V1
www.PowerMCU.com
V1

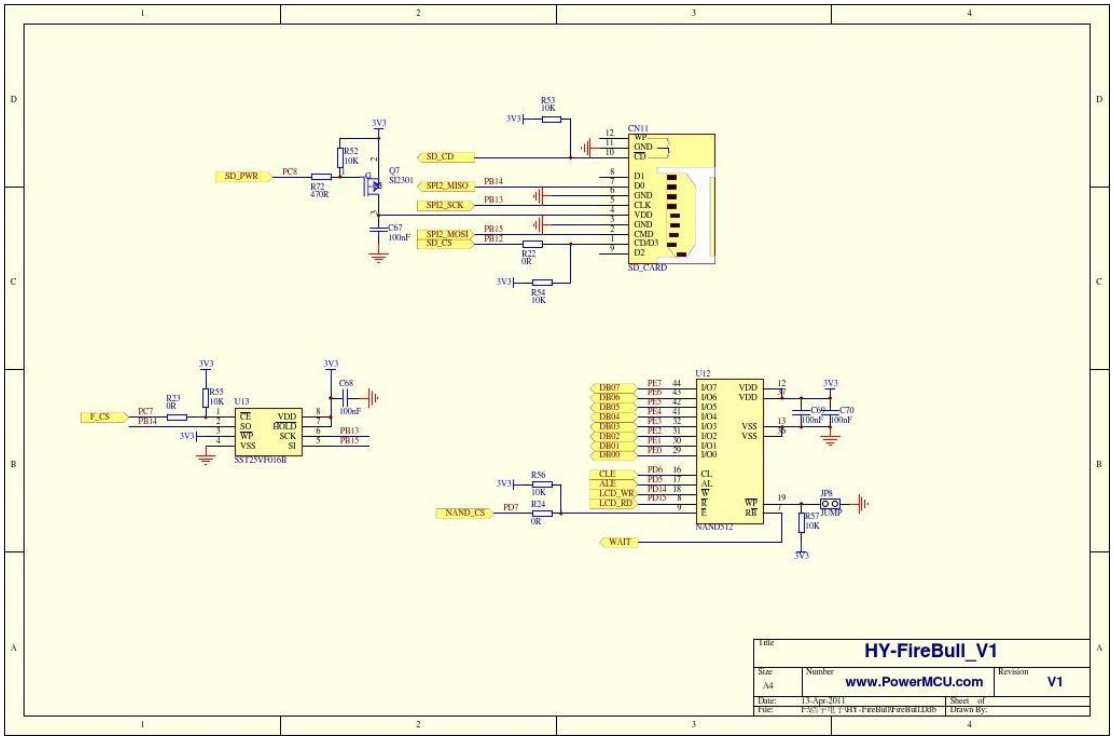
HY-FireBull_V1
www.PowerMCU.com
V1
Size A4
Number
Revision
Date: 13-Apr-2011
File: F:\95 产品_工程\HY-FireBull\FireBull.DDB
Sheet of
Drawn By:
SD_PWR
PC8
R72 470R
Q7 SI2301
R52 10K
3V3
R53 10K
R54 10K
C67 100nF
SD_CD
SPI2_MISO
SPI2_SCK
SPI2_MOSI
SD_CS
PB14
PB13
PB15
PB12
R22 0R
CN11
SD_CARD
F_CS
PC7
PB14
R23 0R
R55 10K
U13
SST25VF016B
C68 100nF
PB13
PB15
U12
NAND512
DB07
DB06
DB05
DB04
DB03
DB02
DB01
DB00
CLE
ALE
LCD_WR
LCD_RD
NAND_CS
PD7
R24 0R
R56 10K
WAIT
R57 10K
JP8
JUMP
C69 100nF
C70 100nF

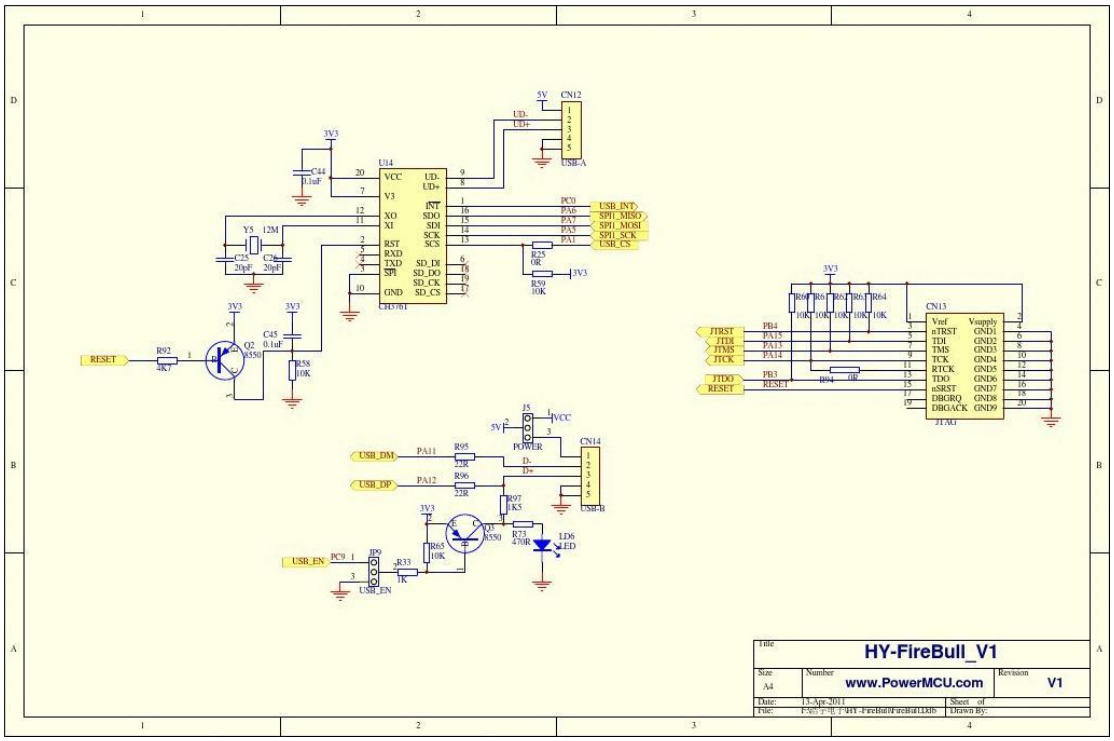
HY-FireBull_V1
www.PowerMCU.com
V1
Size A4
Number
Revision
Date: 13-Apr-2011
File: F:\95 产品_工程\HY-FireBull\FireBull.DDB
Sheet of
Drawn By:
CN12
USB-A
U14
CH376T
C44 0.1uF
Y5 12M
C25 20pF
C26 20pF
USB_INT
SPI1_MISO
SPI1_MOSI
SPI1_SCK
USB_CS
R25 0R
R59 10K
RESET
R92 4K7
Q2 S550
C45 0.1uF
R58 10K
CN13
JTAG
JTRST
JTDI
JTMS
JTCK
JTDO
RESET
R64 0R
J5
POWER
CN14
USB-B
USB_DM
USB_DP
PA11
PA12
R95 22R
R96 22R
R97 1K5
Q3 S550
R73 470R
LD6 LED
R65 10K
R33 1K
USB_EN
JP9
PC9