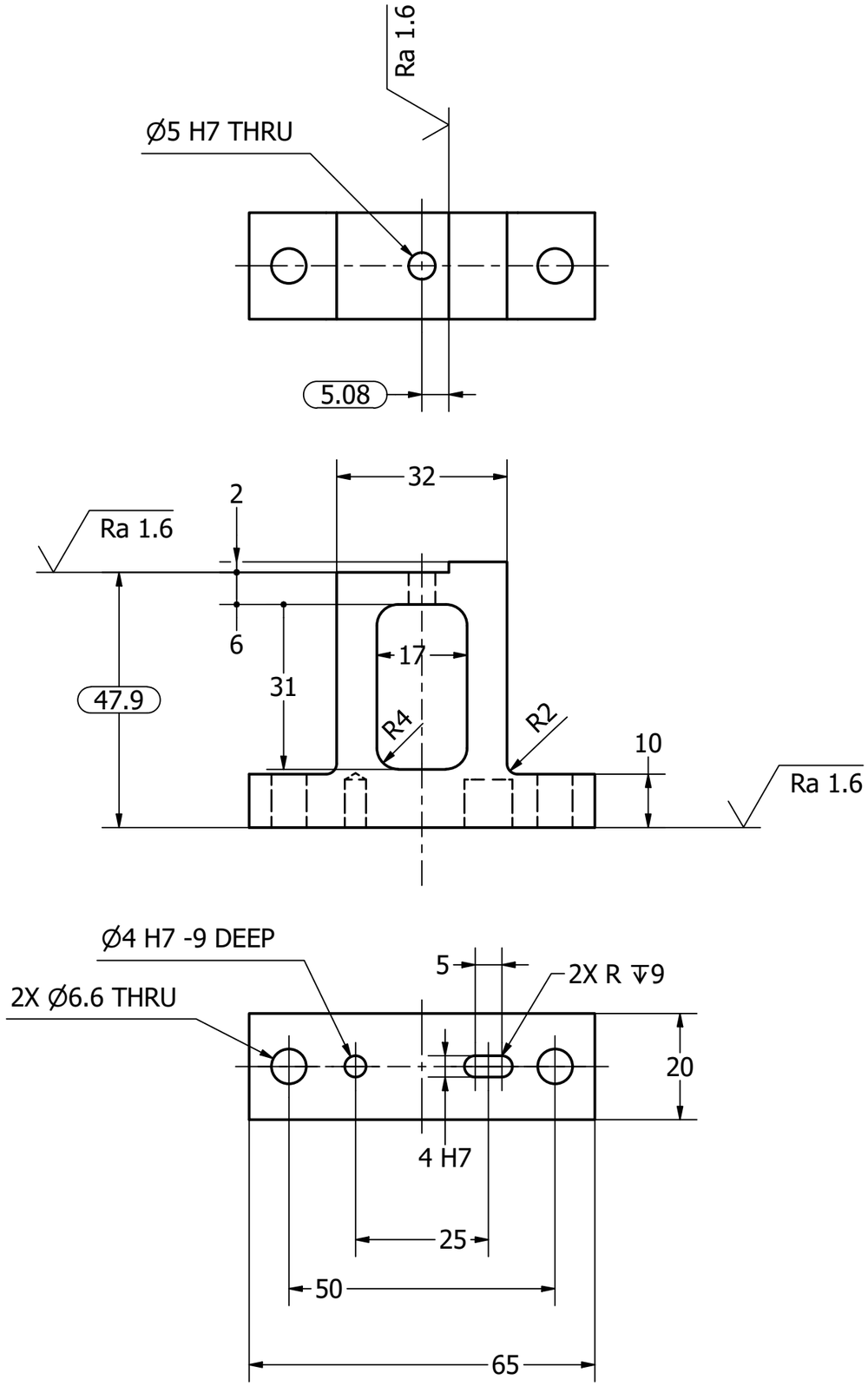

- MATERIAL: Aluminum Alloy 6061-T6
- SURFACE PREPERATION: Before finish, remove all machine marks, burrs and sharp edges. All holes to be debris free.
- THREADS: All threads are to be burr free and tested to specified depth before finish.
- FINISH: Anodize per ISO 7599, black, sealed

2 off

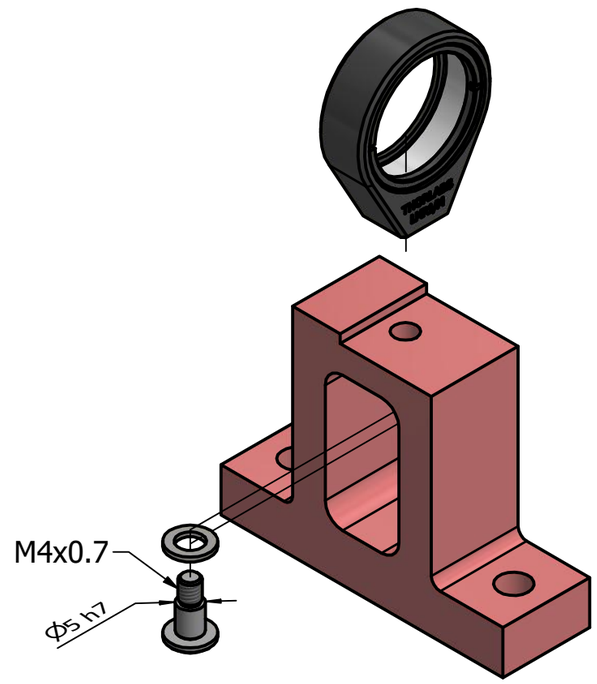

Wixroyd: 36650.W0408
McMaster: 90263A236

Designed by	Checked by	Approved by	Date		Date	
M A Phillips					05/12/2016	

3rd ANGLE PROJECTION

Micron Oxford

LMR1 mount

FAB-P0028

Edition 03

Sheet 1 / 1