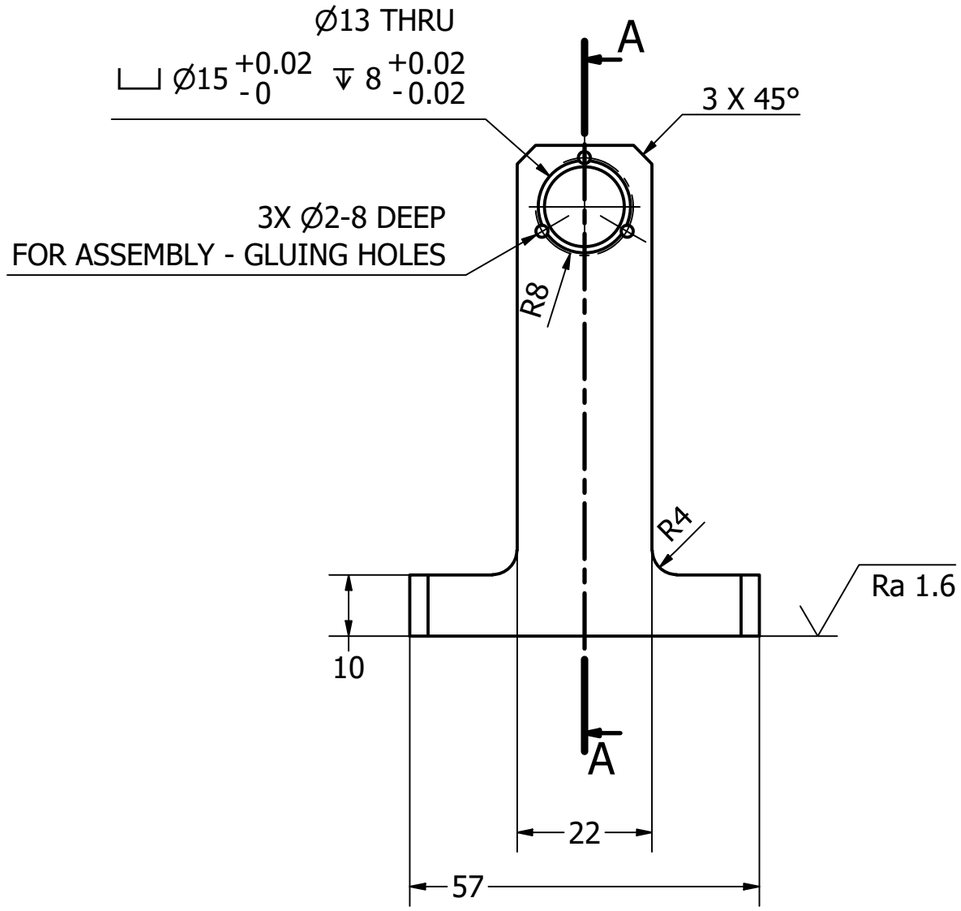

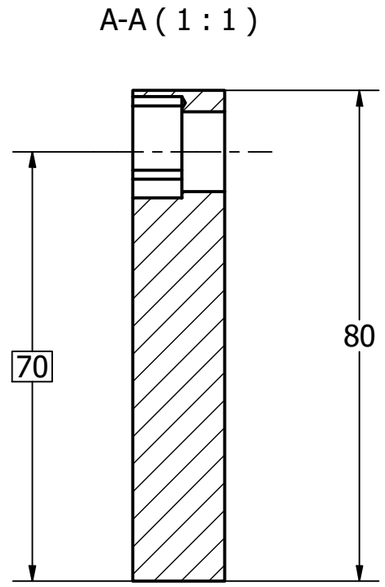

- MATERIAL: Aluminum Alloy 6061-T6
- SURFACE PREPERATION: Before finish, remove all machine marks, burrs and sharp edges. All holes to be debris free.
- THREADS: All threads are to be burr free and tested to specified depth before finish.
- FINISH: Anodize per ISO 7599, black, sealed

2 off

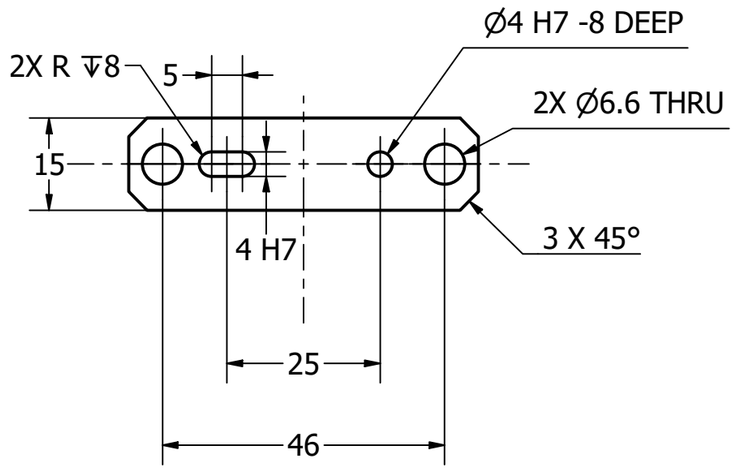

Designed by	Checked by	Approved by	Date		Date	
M A Phillips					02/02/2017	

3rd ANGLE PROJECTION

Micron Oxford

15mm lens holder

FAB-OX0015

Edition 01

Sheet 1 / 1