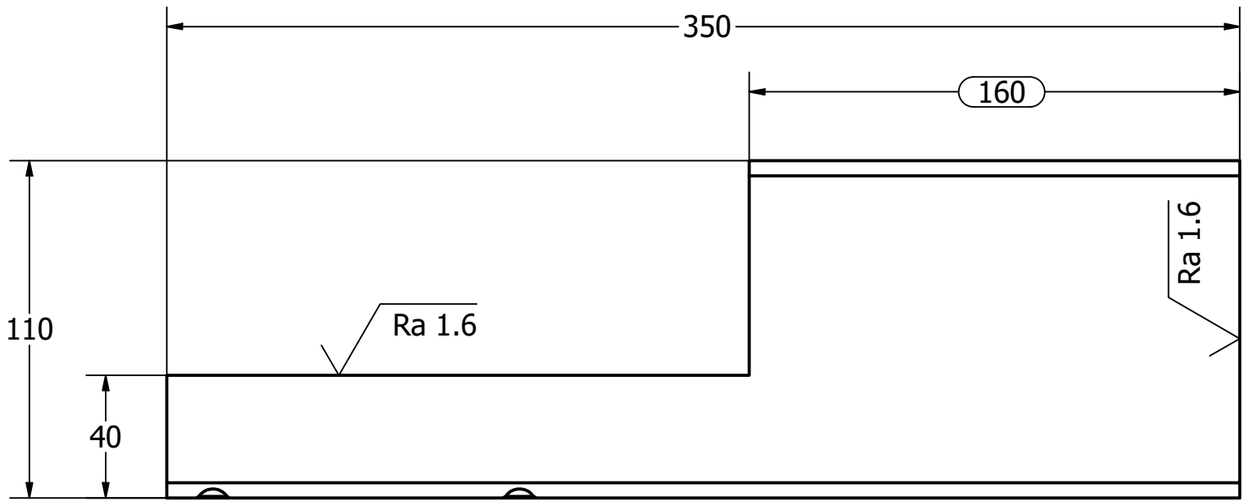

- MATERIAL: Aluminum Alloy 6061-T6
- SURFACE PREPERATION: Before finish, remove all machine marks, burrs and sharp edges. All holes to be debris free.
- THREADS: All threads are to be burr free and tested to specified depth before finish.
- FINISH: Anodize per ISO 7599, black, sealed

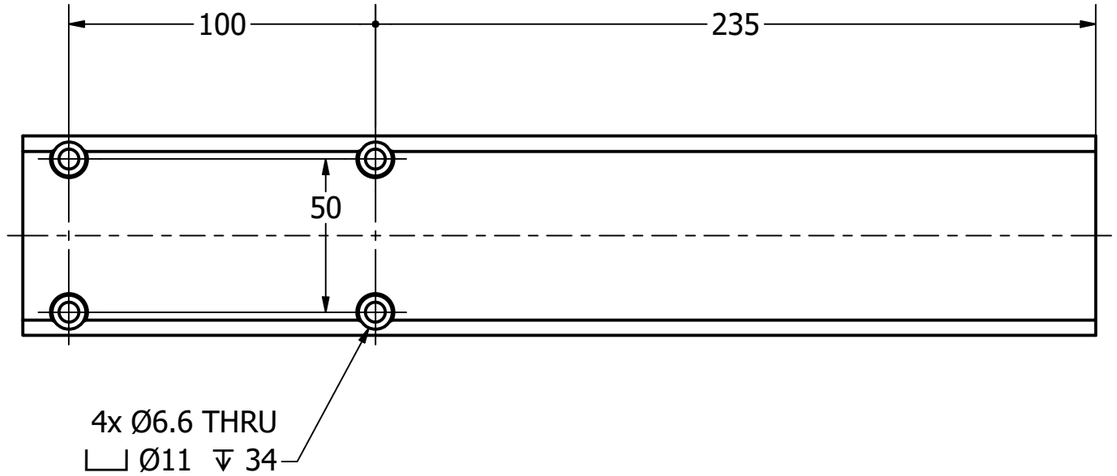

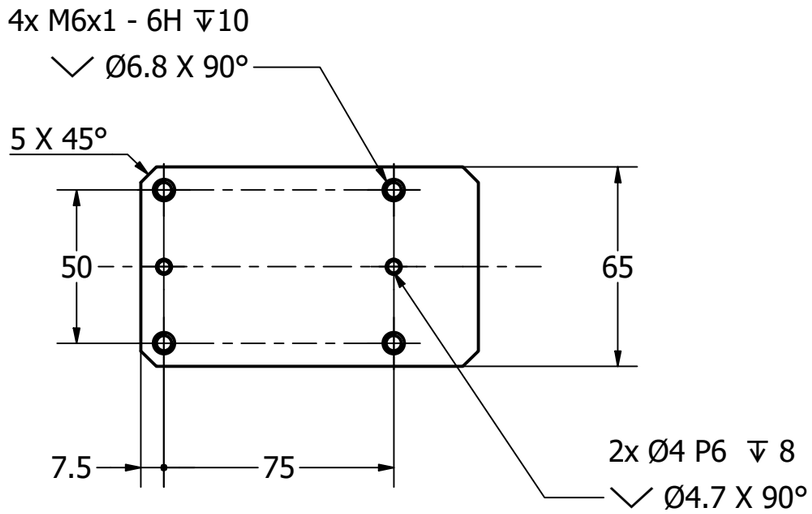

1 off

Designed by	Checked by	Approved by	Date		Date	
C Mace					02/02/2017	

3rd ANGLE PROJECTION

Micron Oxford

Vertical breadboard support

FAB-P0026	Edition 03	Sheet 1 / 1