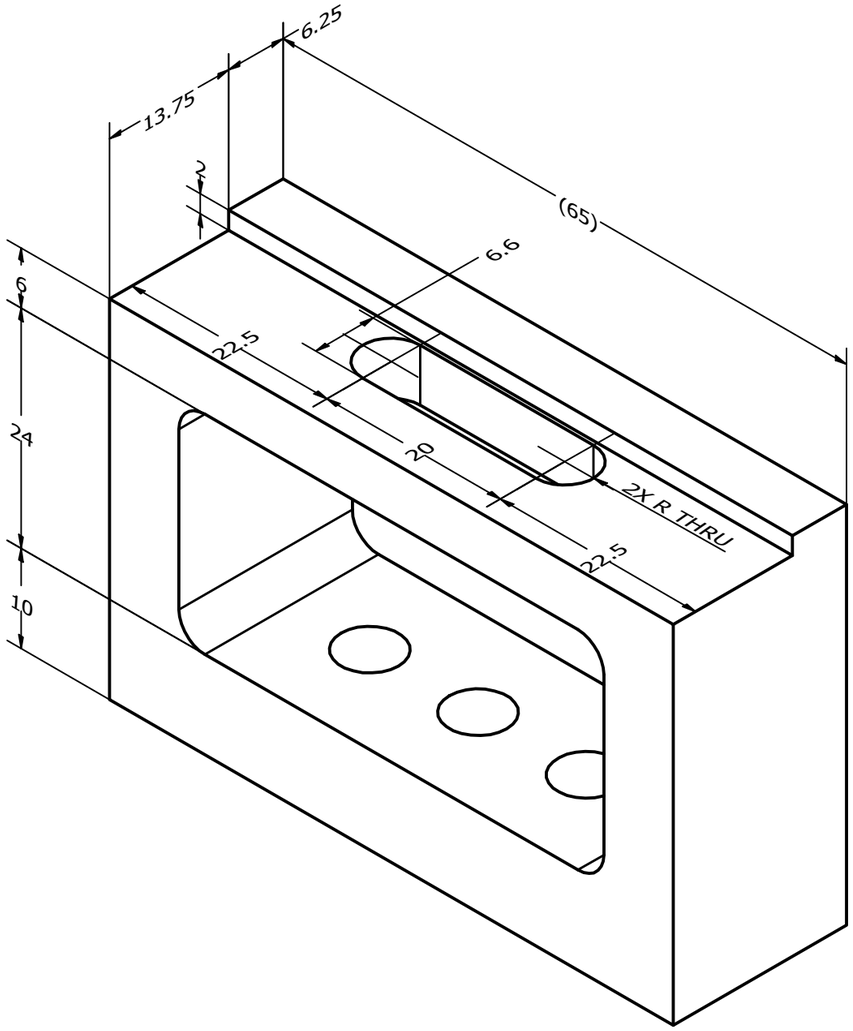

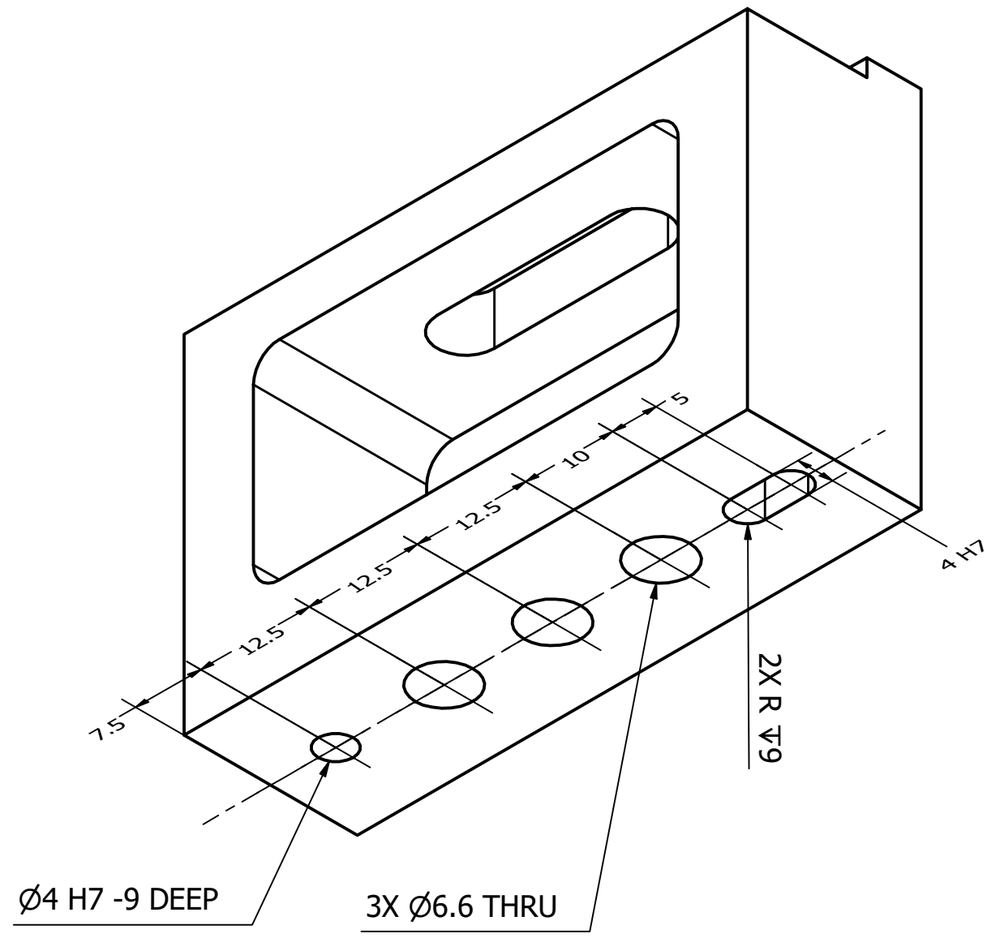

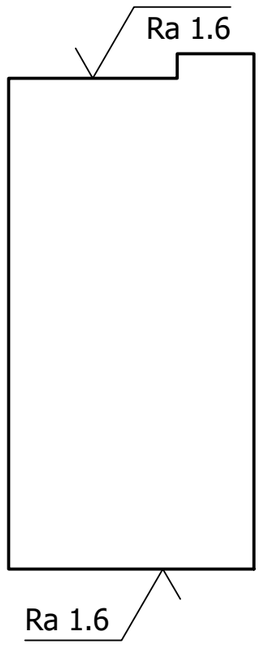

2 off

- MATERIAL: Aluminum Alloy 6061-T6.
- SURFACE PREPERATION: Before finish, remove all machine marks, burrs and sharp edges. All holes to be debris free.
- THREADS: All threads are to be burr free and tested to specified depth before finish.
- FINISH: Anodize per ISO 7599, black, sealed.

Designed by	Checked by	Approved by	Date		Date	
C Mace					05/12/2016	
3rd ANGLE PROJECTION	Micron Oxford	Aperture mount				
		ASF-10003			Edition 03	Sheet 1 / 1