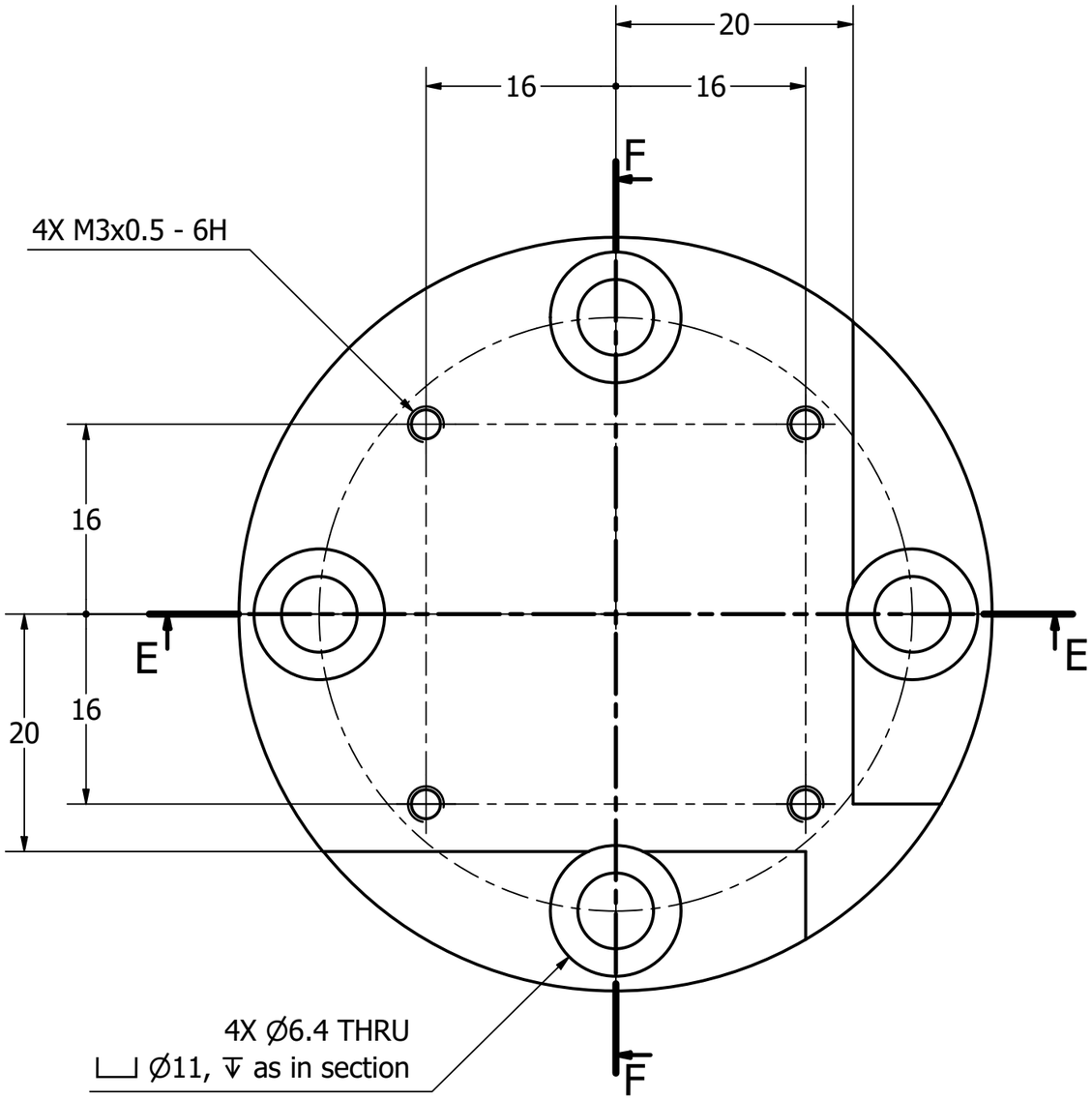

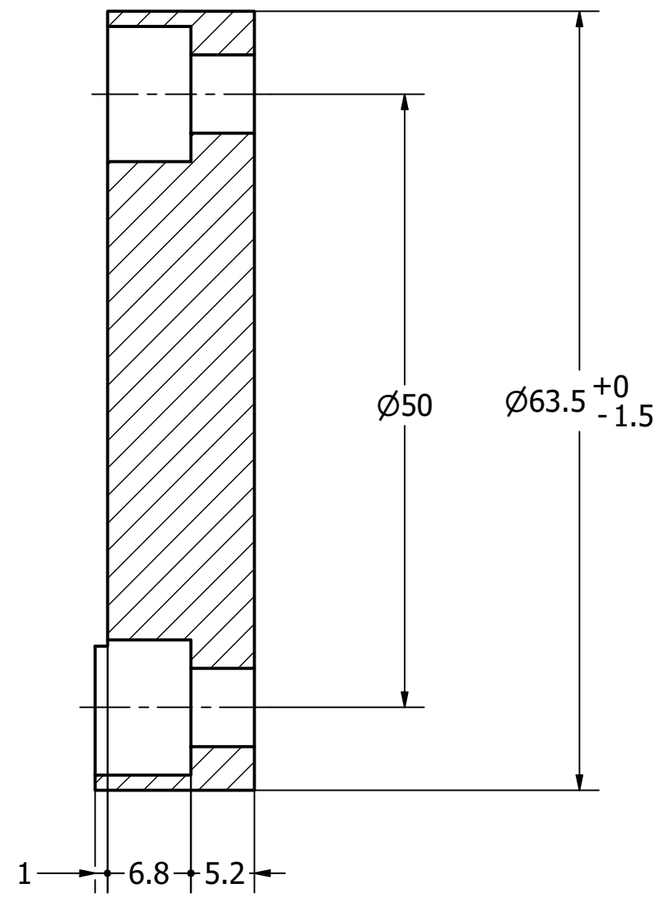

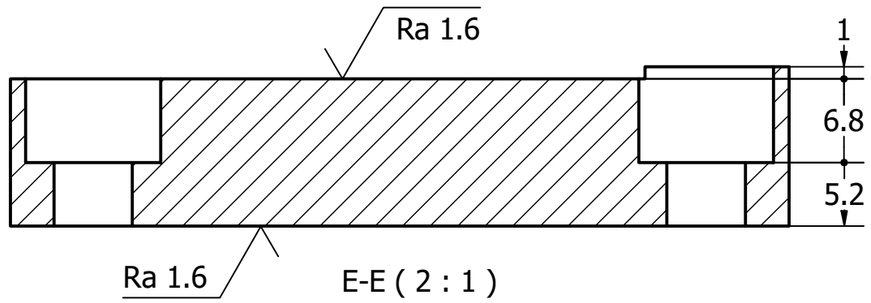

1 off

- MATERIAL: Aluminum Alloy 6061-T6
- SURFACE PREPERATION: Before finish, remove all machine marks, burrs and sharp edges. All holes to be debris free.
- THREADS: All threads are to be burr free and tested to specified depth before finish.
- FINISH: Anodize per ISO 7599, black, sealed.

Designed by M A Phillips	Checked by	Approved by	Date	Date 01/02/2017	
3rd ANGLE PROJECTION	Micron Oxford	Goniometer spacer			
		FAB-OX0005		Edition 02	Sheet 1 / 1