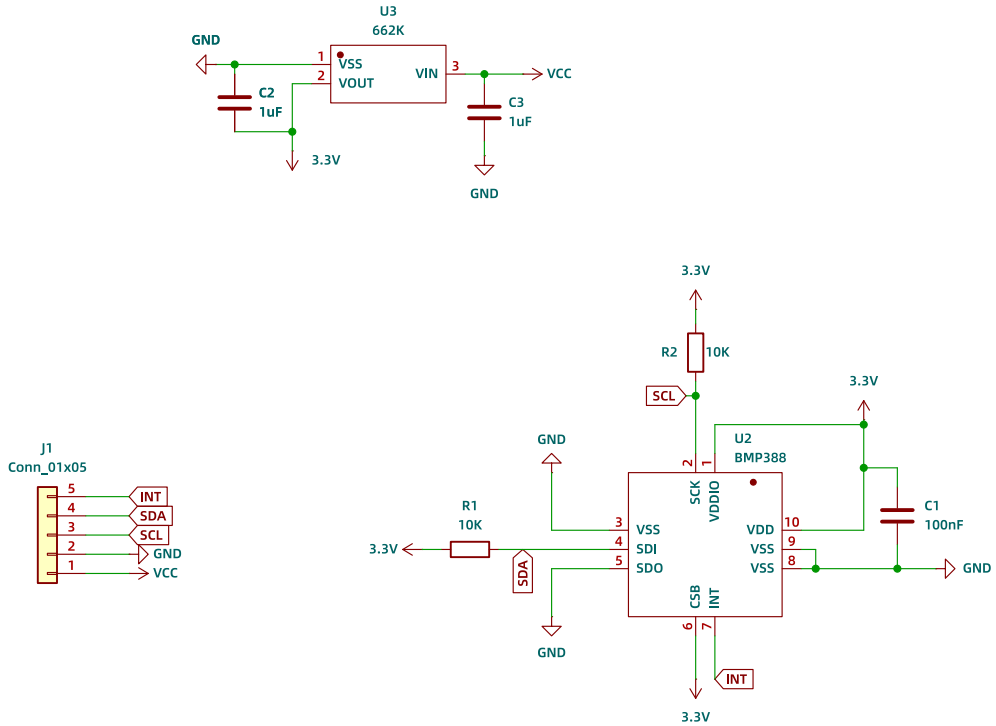

Title:	
Sheet: /	
File: 4T-气压传感器.kicad_sch	
4T Tech	
Size: A4	Date:
Rev:	
Id: 1/1	
KiCad E.D.A. 8.0.4	