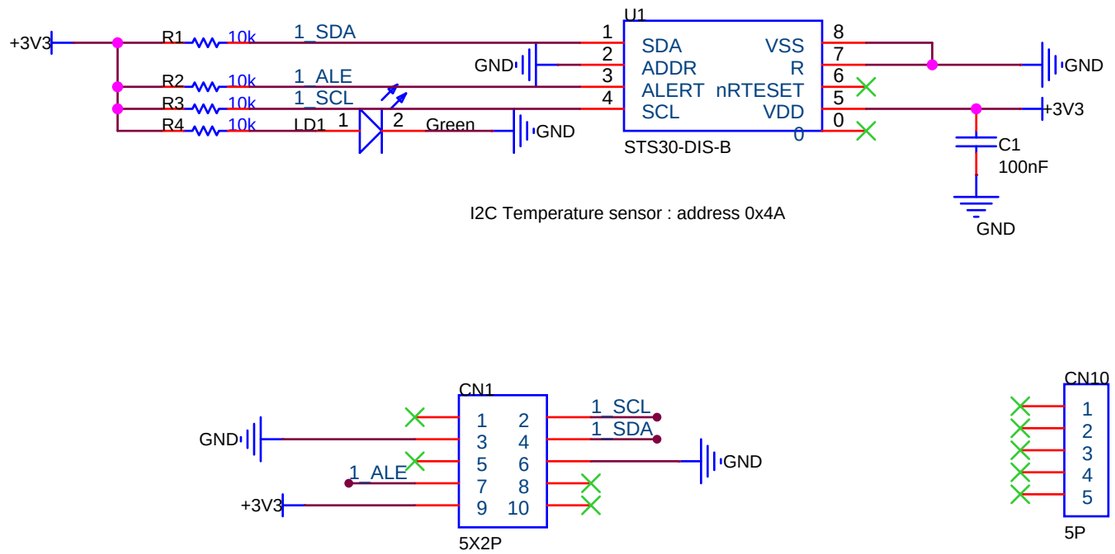

I2C Temperature sensor : address 0x4A

模块_蓝桥杯物联网主板扩展模块			
CT127C_EX03_STS30	CT127C_EX03_STS30		
4T www.4t.wiki	Drawed : T	Create	2022-09-06
	Reviewed : T	Update	2022-08-29